01_Block Diagram
02_System Setting
03_Merom CPU (1)
04_Merom CPU (2)
05_CPU CAPS.
06_965PM--CPU (1)
07_965PM--DDR2/PEG (2)
08_965PM--DDR2 BUS (3)
09_965PM--POWER (4)
10_965PM--POWER (5)
11_965PM--GND/STRAPPING (6)
12_ICH8M(1)
13_ICH8M(2)
14_ICH8M(3)
15_ICH8M--PEW/GND (4)
16_DDR2 SO-DIMM0
17_DDR2 SO-DIMM1
18_DDR2 ADDRESS/TERMINATION
19_VGA_nVIDIA_NB8P_MAIN(1)
20_VGA_nVIDIA_NB8P_Mem/LVDS1(2)
21_VGA_nVIDIA_NB8P_Mem/LVDS2(3)
22_VGA_nVIDIA_NB8P_PCI-E&PWR(4)
23_VGA_nVIDIA_NB8P_VRAM_A(5)
24_VGA_nVIDIA_NB8P_VRAM_B(6)
25_CLOCK GEN-ICS9LPR364AGLF-T
26_CRT CONNECTOR
27_LVDS & INVERTER CONNECTOR
28_THER SENSOR & FAN
29_TV OUT CONN
30_G-SENSOR & ITP
31_MINI CARD -- ROBSON
32_SWITCH
33_DISCHARGE
34_GIGALAN-RTL8110SCL
35_MDC&RJ45&RJ11
36_MINI CARD -- WLAN
37_RICOH-R5C833_PCI
38_RICOH-R5C833_1394/SD
39_4 in 1 CARD READER
40_NEWCARD
41_Port Bar
42_AUDIO-CODEC-ALC882
43_AUDIO AMP & JACK
44_EC-IT8511E
45_Touch Pad/ KB
46_USB CONN
47_ISA ROM
48_LED
49_DCIN & BAT CONN
50_Debug CONN.
51_SATA-HDD & ODD
52_SREW HOLE
53_TPM CONNECTOR
54_BT CONNECTOR
55_POWER_VCORE
56_POWER_SYSTEM_+3VO & +5VO
57_POWER_1.5VS&1.05VS
58_POWER_I/O_DDR & VTT
59_POWER_+3VAO
60_POWER_VGA_CORE
61_POWER_CHARGER
62_POWER_DETECT
63_POWER_PROTECT
64_POWER_LOAD SWITCH
65_POWER_FLOWCHART
66_POWER_SIGNAL
67_HISTORY

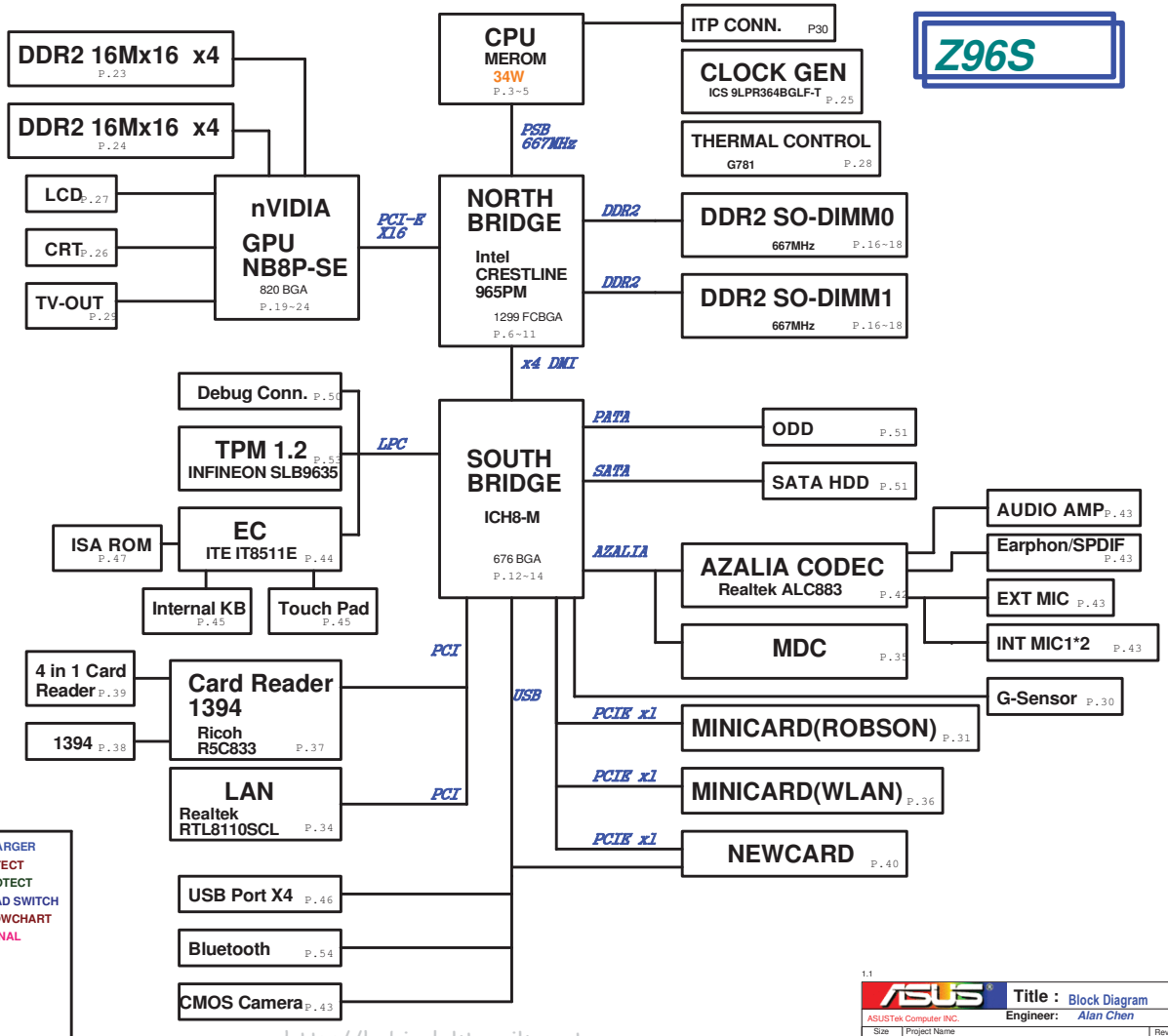

1.1

ASUSTek Computer INC.

Title : Block Diagram

Engineer: Alan Chen

Size	Project Name	Rev
Custom	Z96S	2.0

Date: 星期三, 六月 30, 2007 Sheet 1 of 67

http://hobi-elektronika.net

EC GPIO SETTING

Pin	Pin Name	Signal Name	Type
32	PWM0/GPA0	BL_PWM_DA	O
33	PWM1/GPA1	FAN_PWM	O
36	PWM2/GPA2	CLK_PWRSAVE#	O
37	PWM3/GPA3	N/A	
38	PWM4/GPA4	CHG_LED_UP#	O
39	PWM5/GPA5	PWR_LED_UP#	O
40	PWM6/GPA6	N/A	
43	PWM7/GPA7	LCD_BACKOFF#	O
153	RXD/GPB0	NUM_LED	O
154	TXD/GPB1	CAP_LED	O
162	GPB2	SCRL_LED	O
163	SMCLK0/GPB3	SMB0_CLK	I/0
164	SMDAT0GPB4	SMB0_DAT	I/0
5	GA20/GPB5	A20GATE	O
6	KBRST#/GPB6	RC_IN#	O
165	GPB7	THRO_CPU	O
47	CLKOUT/GPC0	N/A	
169	SMCLK1/GPC1	SMB1_CLK	I/0
170	SMDAT1/GPC2	SMB1_DAT	I/0
171	GPC3	Mail_LED	O
172	TMRI0/WUI2/GPC4	AC_OK#	I
175	GPC5	OP_SD#	O
176	TMRI1/WUI3/GPC6	BAT_IN_OC#	I
1	CK32KOUT/GPC7	N/A	
26	RI1#/WUI0/GPD0	SUSB#	I
29	RI2#/WUI1/GPD1	SUSC#	I
30	LPCRST#/WUI4//GPD2	PLT_RST#	I
31	ECSCI#/GPD3	EXT_SCI#	O
41	GPD4	RF_ON_SW#	O
42	GINT/GPD5	N/A	
62	TACH0/GPD6	FAN0_TACH	I
63	TACH1/GPD7	N/A	
87	ADC4/GPE0	EMAIL_SW#	I
88	ADC5/GPE1	INTERNET#	I
89	ADC6/GPE2	EXPLORE_SW#	I
90	ADC7/GPE3	DISTP_SW#	I
2	PWRSW/GPE4	PWR_SW#	I
44	WUI5/GPE5	N/A	
24	LPCPD#/WUI6/GPE6	N/A	
25	CLKRUN#/WUI7/GPE7	N/A	
101	GPJ2/DAC2	BL_DA	O
102	GPJ3/DAC3	BATSEL_2P#	O
81	GPK0/ADC0	P_PMON	I
22	ECSMI#/GPM0	EXT_SMI#	O
116	PS2CLK2/GPF4	TP_CLK	I/0
117	PS2DAT2/GPF5	TP_DAT	I/0
118	PS2CLK3/GPF6	N/A	
119	PS2DAT3/GPF7	N/A	
113	FA16/GPG0	FA16	O
112	FA17/GPG1	FA17	O
104	FA18/GPG2	FA18	O
103	FA19/GPG3	N/A	
3	FA20/GPG4	LID_EC#	I
4	FA21/GPG5	PMTHERM#	O
27	LPC80HL/GPG6	THRM_CPU#	I
28	LPC80LL/GPG7	AC_APR_UC#	I

Pin	Pin Name	Signal Name	Type
48	GPH0	VSUS_ON	O
54	GPH1	VSUS_GD#	I
55	GPH2	CPUPWR_GD#	I
69	GPH3	PM_PWRBTN#	O
70	GPH4	SUSC_ON	O
75	GPH5	SUSB_ON	O
76	GPH6	CPU_VRON	O
105	GPH7	PM_RSMRST#	O
148	GPI0	SB_PWRGD	O
149	GPI1	N/A	
152	GPI2	MCHOK	I
155	GPI3	CHG_EN#	O
156	GPI4	PRECHG	O
168	GPI5	BAT_LL#	O
174	GPI6	BAT_LEARN	O

PCI Device	IDSEL#	REQ/GNT#	Interrupts
CARD READER	AD17	REQ#0/GNT#0	INTB-->INTB
1394	AD17	REQ#0/GNT#0	INTA-->INTA
LAN	AD23	REQ#2/GNT#2	INTA-->INTC

SM-Bus Device	SM-Bus Address
Clock Generator	1101001x (D2)
SO-DIMM 0	1010000x (A0)
SO-DIMM 1	1010001x (A2)
Thermal Sensor	0101110x (5C)

ICH8-M GPIO SETTING

Pin	Pin Name	Signal Name	Type	Power_Well	Default
AG12	GPIO0/BMBUSY#	PM_BMBUSY#	I/O	Core(To:3.3V)	GPI
AJ8	GPIO1/TACH1	VDDR_SEL0	I/O	Core(To:3.3V)	GPI
F8	GPIO2/PIRQE#	INT_SHIFT_LOW#	I(OD)	Core(To:5V)	GPI
G11	GPIO3/PIRQF#	INT_SHIFT_HIGH#	I(OD)	Core(To:5V)	GPI
F12	GPIO4/PIRQG#	PCI_INTG#	I(OD)	Core(To:5V)	GPI
B3	GPIO5/PIRQH#	PCI_INTH#	I(OD)	Core(To:5V)	GPI
AJ9	GPIO6/TACH2	VDDR_SEL1	I/O	Core(To:3.3V)	GPI
AH9	GPIO7/TACH3	VDDR_SEL2	I/O	Core(To:3.3V)	GPI
AE16	GPIO08	EXT_SMI#	I/O	SUS(To:3.3V)	GPI
AG19	GPIO09/WOL_EN	TP	I/O	SUS(To:3.3V)	GPI
AJ24	GPIO10/CLGPIO1	TP	I/O	SUS(To:3.3V)	GPI
AG22	SMBALERT#/GPIO11	NC	I/O	SUS(To:3.3V)	Native
AC19	GPIO12	EXT_SCI#	I/O	SUS(To:3.3V)	GPI
AH21	GPIO13/GLAN_DOCL#	NC	I/O	SUS(To:3.3V)	Native
AF22	GPIO14/CLGPIO2	TP	I/O	SUS(To:3.3V)	GPI
AE20	GPIO15/STP_PCI#	STP_PCI#	I/O	SUS(To:3.3V)	Native
AJ14	GPIO16/DPRSLPVR	PM_DPRSLPVR	I/O	Core(To:3.3V)	Native
AG8	GPIO17/TACH0	PM_EXTTS#0	I/O	Core(To:3.3V)	GPI
AH12	GPIO18	VCORE_SEL0	I/O	Core(To:3.3V)	GPO
AJ10	GPIO19/SATA1GP	CB_SD#	I/O	Core(To:3.3V)	GPI
AE11	GPIO20	VCORE_SEL1	I/O	Core(To:3.3V)	GPO
AJ12	GPIO21/SATA0GP	WLAN_BT_LED_EN#	I/O	Core(To:3.3V)	GPI
AG10	GPIO22/SCLOCK	TP	I/O	Core(To:3.3V)	GPI
E6	GPIO23/LDRQ1#	TP	I/O	Core(To:3.3V)	Native
AJ27	GPIO24/CLGPIO0	TP	I/O	SUS(To:3.3V)	GPO
AG18	GPIO25/STP_CPU#	STP_CPU#	I/O	SUS(To:3.3V)	Native
AH27	GPIO26/S4_STATE#	TP	I/O	SUS(To:3.3V)	Native
AH25	GPIO27/QRT_STATE0	VGMCH_SEL0	I/O	SUS(To:3.3V)	GPO
AD16	GPIO28/QRT_STATE1	VGMCH_SEL1	I/O	SUS(To:3.3V)	GPO
AG17	GPIO29/OC#5	USB_OC#5	I/O	SUS(To:3.3V)	Native
AD12	GPIO30/OC#6	NEWCARD_OC#	I/O	SUS(To:3.3V)	Native
AJ18	GPIO31/OC#7	USB_OC#7	I/O	SUS(To:3.3V)	Native
AH11	GPIO32/CLKRUN#	PM_CLKRUN#	I/O	Core(To:3.3V)	Native
AE10	GPIO33/HDA_DOCK_EN#	TP	I/O	Core(To:3.3V)	GPO
AG14	GPIO34/HDA_DOCK_RST#	TP	I/O	Core(To:3.3V)	GPO
AG13	GPIO35/SATACLKREQ#	VGPU_SEL1	I/O	Core(To:3.3V)	GPO
AF11	GPIO36/SATA2GP	WLAN_ON#	I/O	Core(To:3.3V)	GPI
AG11	GPIO37/SATA3GP	BT_ON#	I/O	Core(To:3.3V)	GPI
AF9	GPIO38/SLOAD	PM_EXTTS#1	I/O	Core(To:3.3V)	GPI
AJ11	GPIO39/SDATAOUT0	CLK_PWRSAVE#	I/O	Core(To:3.3V)	GPI
AG16	GPIO40/OC1#	USB_CON_OC01#	I/O	SUS(To:3.3V)	Native
AG15	GPIO41/OC2#	USB_CON_OC23#	I/O	SUS(To:3.3V)	Native

Pin	Pin Name	Signal Name	Type	Power_Well	Default
AD16	GPIO42/OC3#	USB_CON_OC23#	I/O	SUS(To:3.3V)	Native
AG17	GPIO43/OC4#	USB_CON_OC4#	I/O	SUS(To:3.3V)	Native
N/A	GPIO44	N/A	I/O	N/A	N/A
N/A	GPIO45	N/A	I/O	N/A	N/A
N/A	GPIO46	N/A	I/O	N/A	N/A
N/A	GPIO47	N/A	I/O	N/A	N/A
AD10	GPIO48/SDATAOUT1	TP	I/O	Core(To:3.3V)	GPI
AG29	GPIO49/CPUPWRGD	H_PWRGD	I/O	V_CPU_IO	Native
E18	GPIO50/REQ1#	PCI_REQ#1	I/O	Core(To:5.5V)	Native
C18	GPIO51/GNT1#	TP	I/O	Core(To:3.3V)	Native
B19	GPIO52/REQ2#	PCI_REQ#2	I/O	Core(To:5.5V)	Native
F18	GPIO53/GNT2#	PCI_GNT#2	I/O	Core(To:3.3V)	Native
A11	GPIO54/REQ3#	PCI_REQ#3	I/O	Core(To:5.5V)	Native
C10	GPIO55/GNT3#	NC	I/O	Core(To:3.3V)	Native

1.1

ASUSTek Computer INC.

Title : System Setting

Engineer: Alan Chen

Size	Project Name	Rev
Custom	Z96S	2.0

Date: 星期二, 六月 30, 2007 Sheet 2 of 67

http://www.xiaomi.com.cn

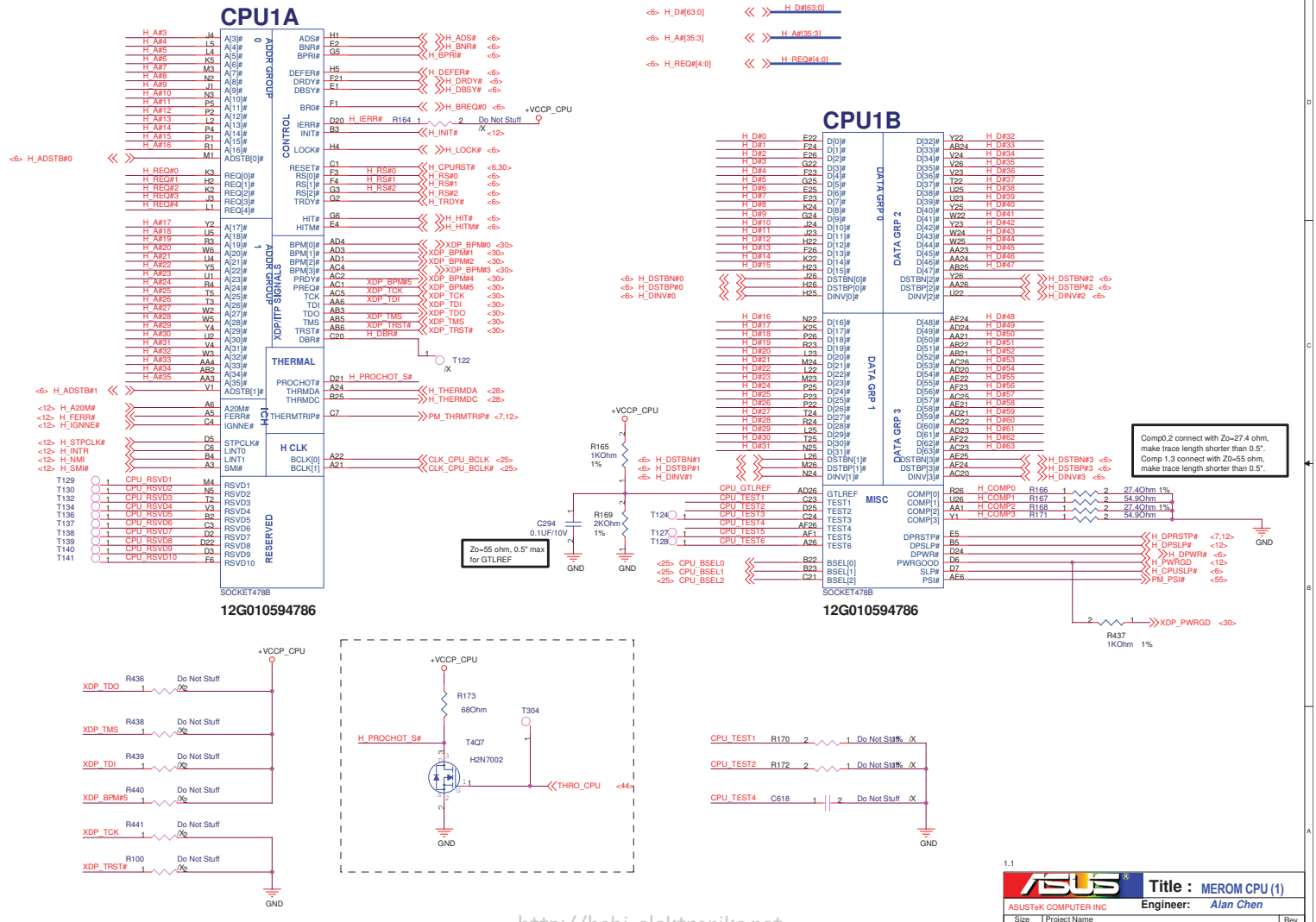

http://hobi-elektronika.net

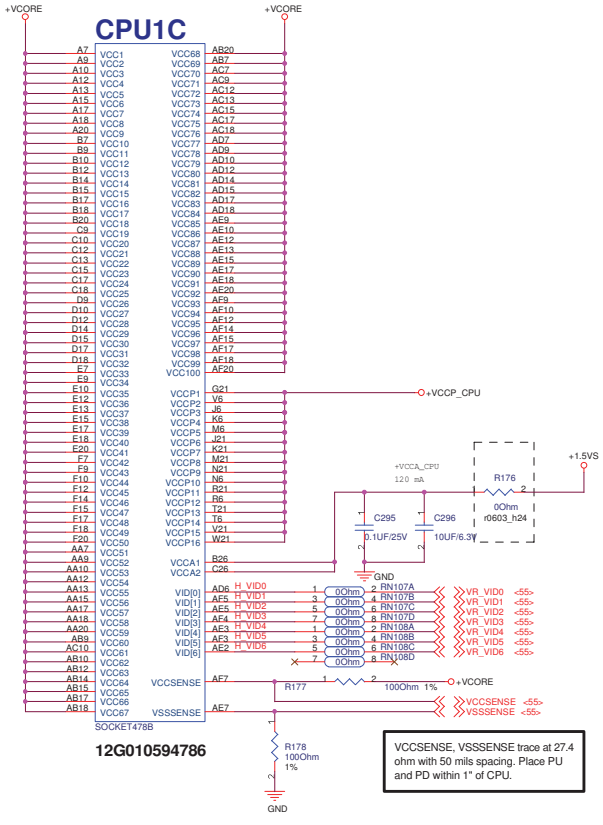

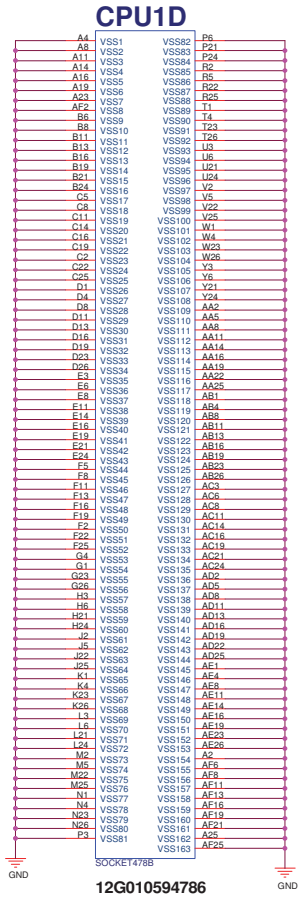

1.1

ASUSTeK COMPUTER INC

Title : MEROM CPU (2)

Engineer: Alan Chen

Size	Project Name	Rev
Custom	Z96S	2.0

Date: 星期二, 五月 30, 2007 Sheet 4 of 67

http://hobi-elektronika.net

44A for Merom

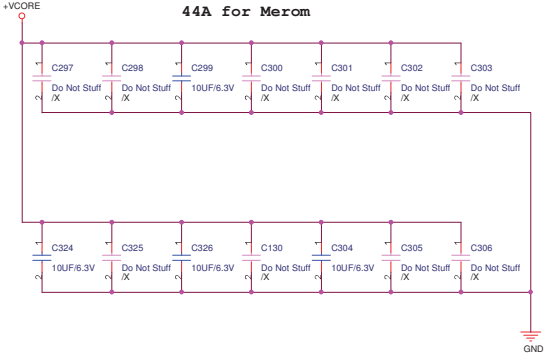

+VCCP Decoupling Capacitor (Place near CPU)

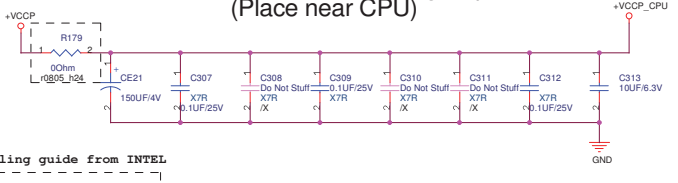

Decoupling guide from INTEL

VCORE	22uF/10V	* 32pcs
	330uF/2V	* 6pcs
VCCP	0.1uF	* 6pcs for CPU
	150uF	* 1pcs for CPU

1.1

ASUS

Title : CPU CAP and HOLES

ASUSTek COMPUTER INC. NB1

Engineer: *Alan Chen*

Size	Project Name	Rev
Custom	Z96S	2.0

Date: 星期二, 五月 30, 2007 Sheet 5 of 67

http://hobi-elektronika.net

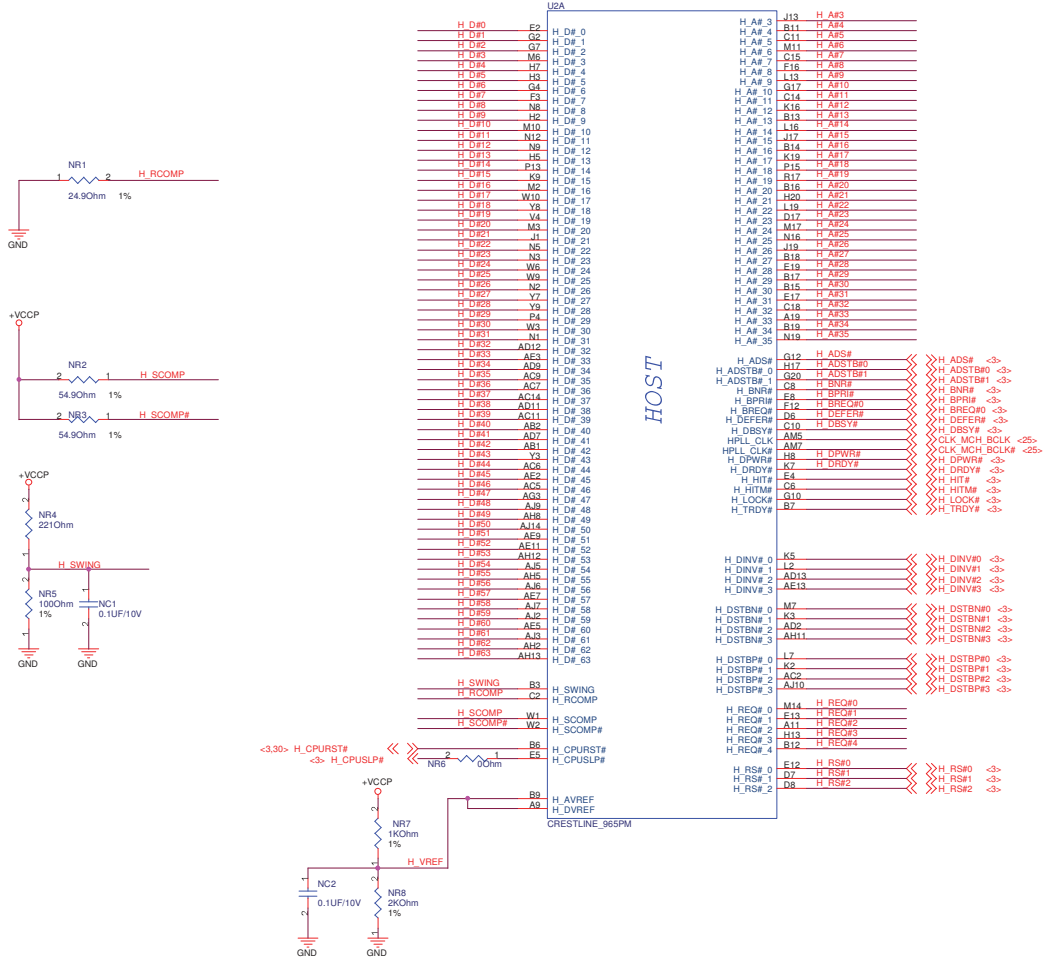

1.1

ASUSTeK COMPUTER INC

Title : 965PM -- CPU (1)

Engineer: Alan Chen

Size	Project Name	Rev
Custom	Z96S	2.0

Date: 星期三, 五月 30, 2007 Sheet 6 of 67

http://hobi-elektronika.net

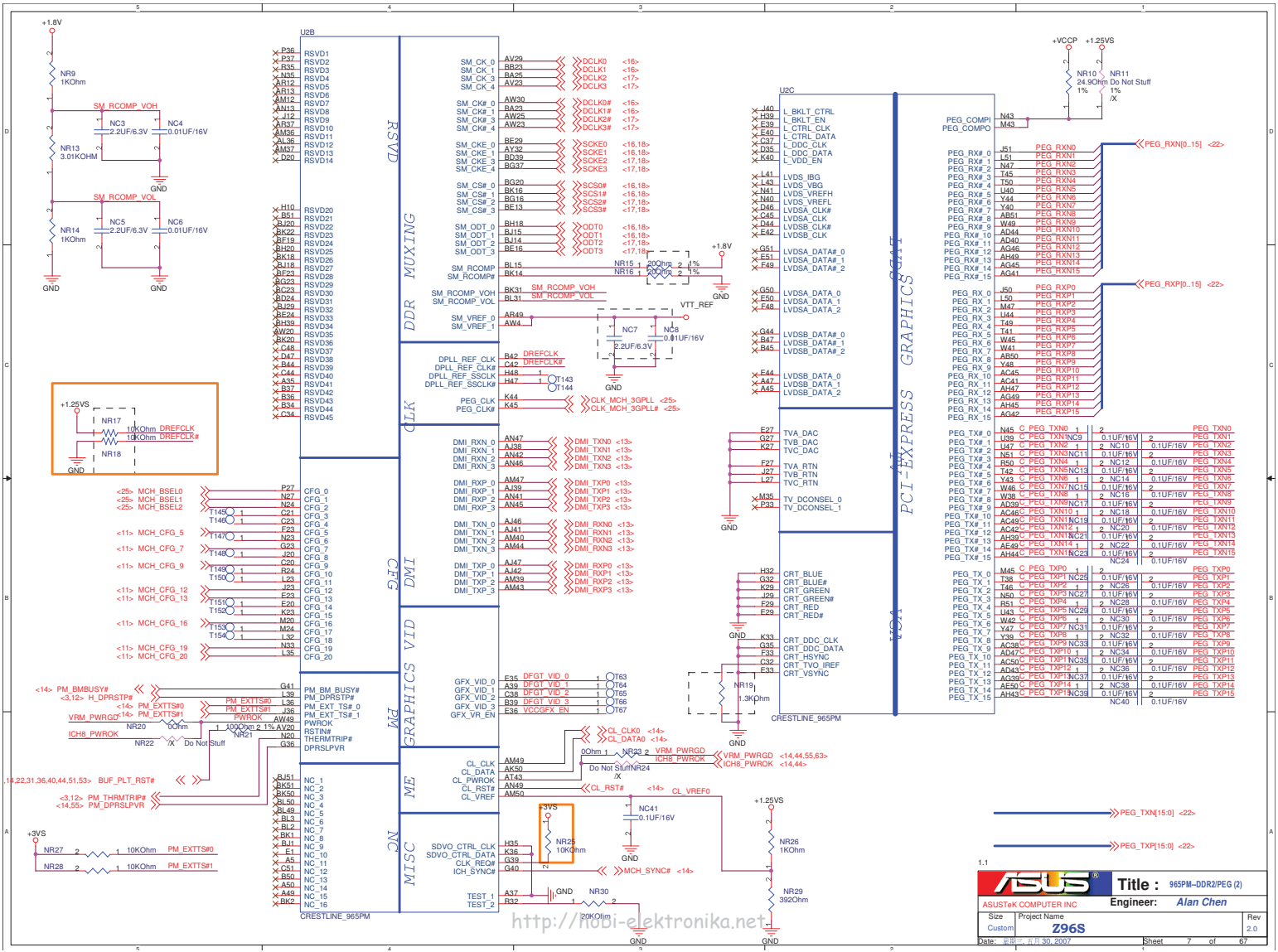
U2B
RSVD
DDR MUXING
CLK
DMI
CFG
VID
PM
GRAPHICS
ME
MISC
NC
CRESTLINE_965PM
U2C
PCI-EXPRESS GRAPHICS
DDR
CRT
LVDS
TVDA
CRESTLINE_965PM
SM_RCOMP_VOH
SM_RCOMP_VOL
NR13 3.01KOHM
NR14 1KOHM
NC3 2.2UF/6.3V
NC4 0.01UF/16V
NC5 2.2UF/6.3V
NC6 0.01UF/16V
NR17 10KOhm DREFCLK
NR18 10KOhm DREFCLK#
NR19 1.3KOhm
NR20 0Ohm
NR21 100Ohm 2 1% AV20
NR22 /X Do Not Stuff
NR23 0Ohm
NR24 Do Not Stuff /X
NR25 10KOhm
NR26 1KOhm
NR29 392Ohm
NR30 20KOhm
NC41 0.1UF/16V
NC7 2.2UF/6.3V
NC8 0.01UF/16V
NR10 24.9Ohm 1%
NR11 Do Not Stuff 1% /X
NR15 200Ohm 2 1%
NR16 200Ohm 2 1%
NR27 10KOhm PM_EXTTS#0
NR28 10KOhm PM_EXTTS#1
PM_BMBUSY#
H_DPRSTP#
PM_EXTTS#0
PM_EXTTS#1
VRM_PWRGD
ICH8_PWROK
PM_THRMTRIP#
PM_DPRSLPVR
BUF_PLT_RST#
CL_CLK0
CL_DATA0
CL_RST#
CL_VREF0
VRM_PWRGD
ICH8_PWROK
MCH_SYNC#
DFGT_VID_0
DFGT_VID_1
DFGT_VID_2
DFGT_VID_3
VCCGFX_EN
DREFCLK
DREFCLK#
CLK_MCH_3GPLL
CLK_MCH_3GPLL#
MCH_BSEL0
MCH_BSEL1
MCH_BSEL2
MCH_CFG_5
MCH_CFG_7
MCH_CFG_9
MCH_CFG_12
MCH_CFG_13
MCH_CFG_16
MCH_CFG_19
MCH_CFG_20
PEG_RXN[0..15]
PEG_RXP[0..15]
PEG_TXN[15:0]
PEG_TXP[15:0]
+1.8V
+1.25VS
+3VS
+VCCP
VTT_REF
GND
ASUS
Title : 965PM-DDR2/PEG (2)
ASUSTeK COMPUTER INC
Engineer: Alan Chen
Size Custom
Project Name Z96S
Rev 2.0
Date: 星期二, 五月 30, 2007
Sheet 7 of 67
http://hobi-elektronika.net

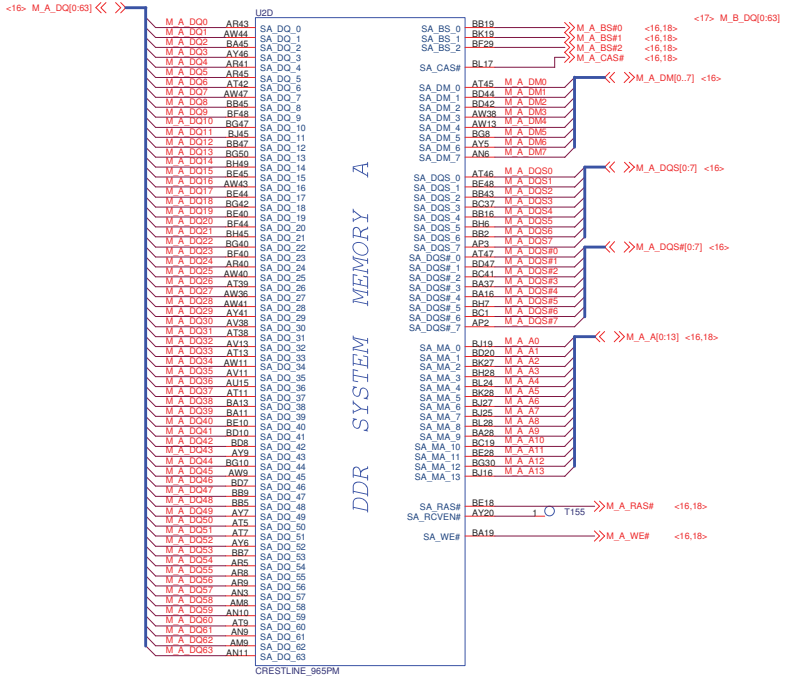

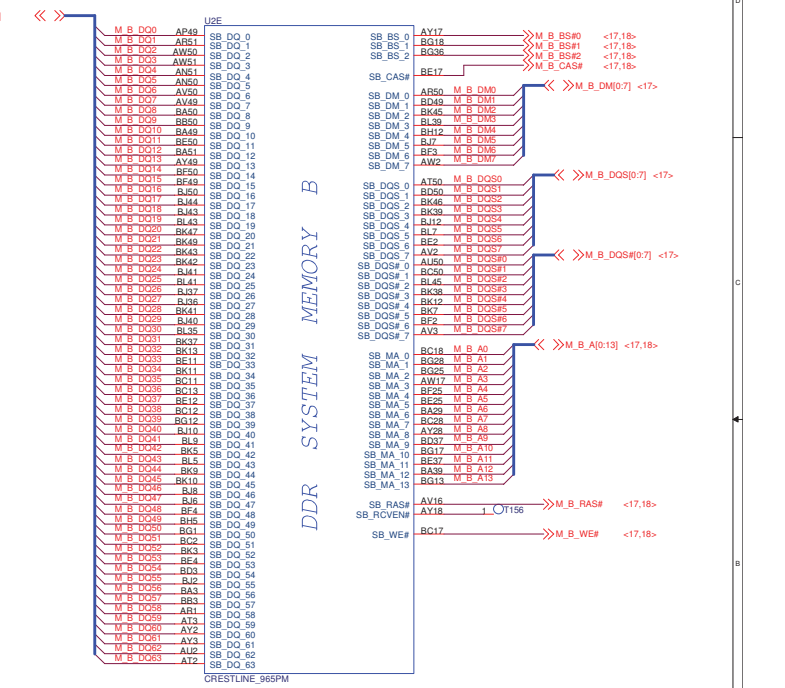

1.1

ASUS

Title : 965PM--DDR2 bus (3)

ASUSTeK COMPUTER INC

Engineer: Alan Chen

Size	Project Name	Rev
Custom	Z96S	2.0

Date: 星期三, 五月 30, 2007 Sheet 8 of 67

http://hobi-elektronika.net

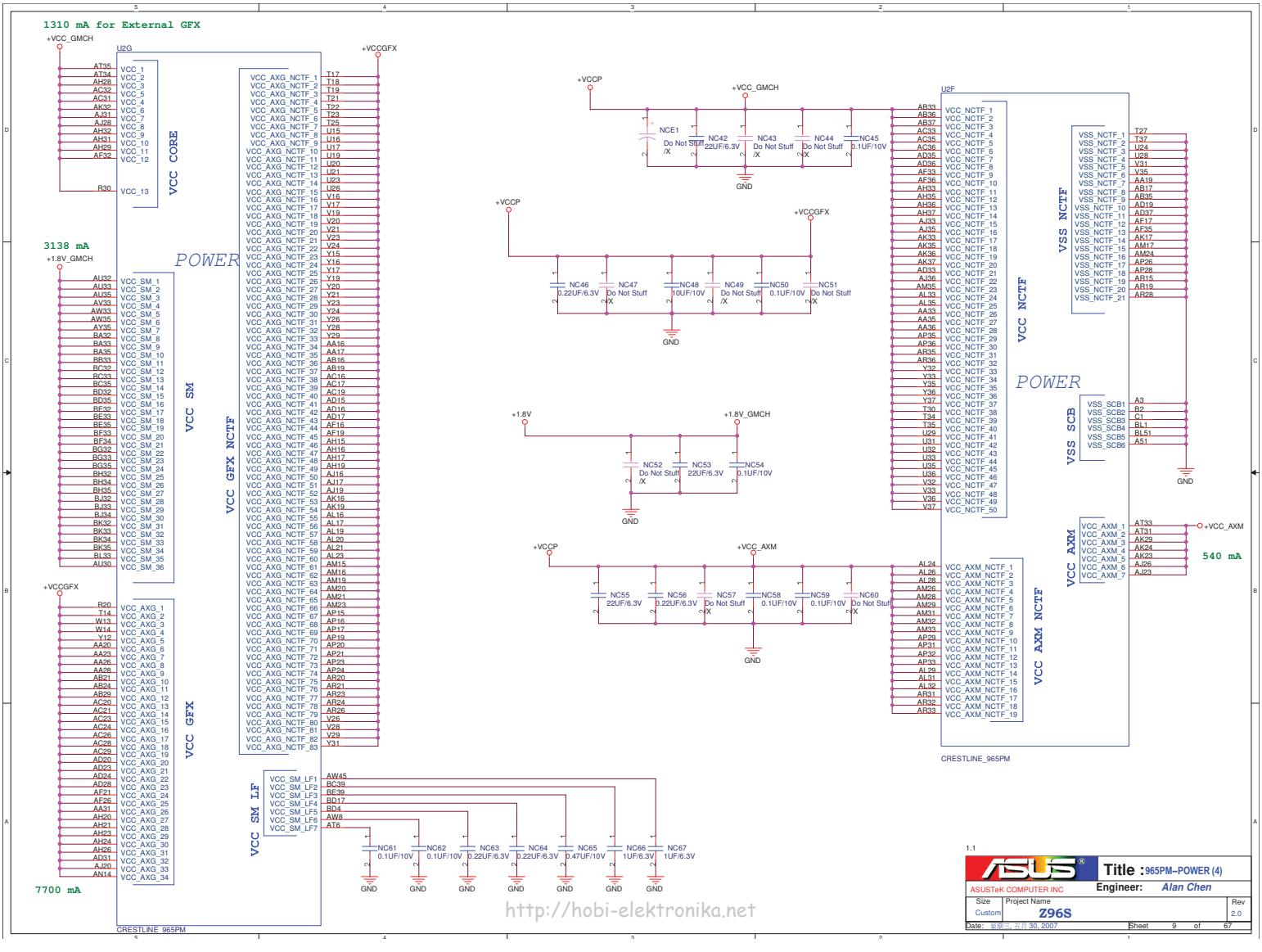

http://hobi-elektronika.net

NOTE:0.1uF caps in 1.5VS_XPLL need to be located as edge caps within 200 mils.

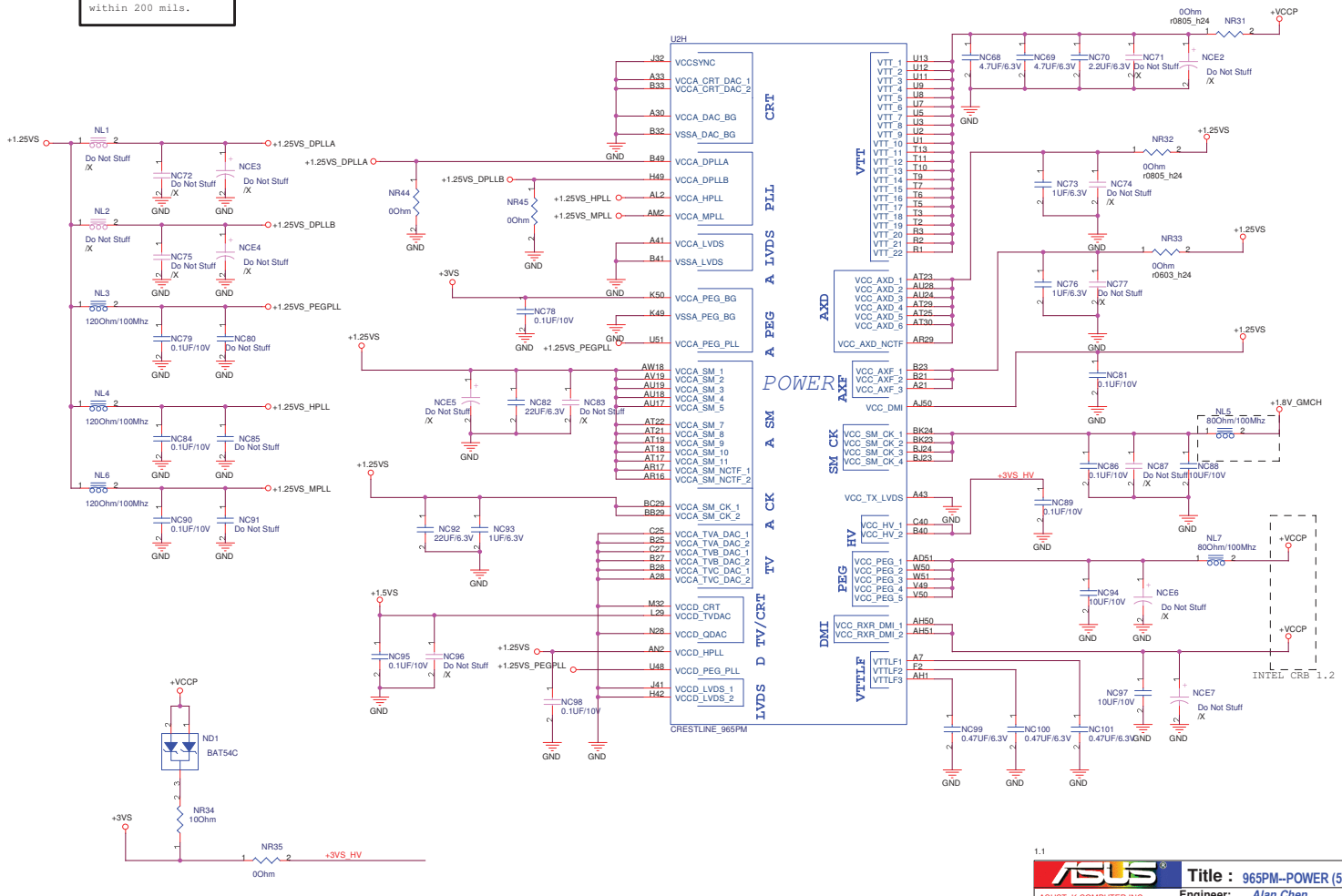

http://hobi-elektronika.net

1.1

ASUSTeK COMPUTER INC

Title : 965PM--POWER (5)

Engineer: Alan Chen

Size	Project Name	Rev
Custom	Z96S	2.0

Date: 星期二, 五月 30, 2007 Sheet 10 of 67

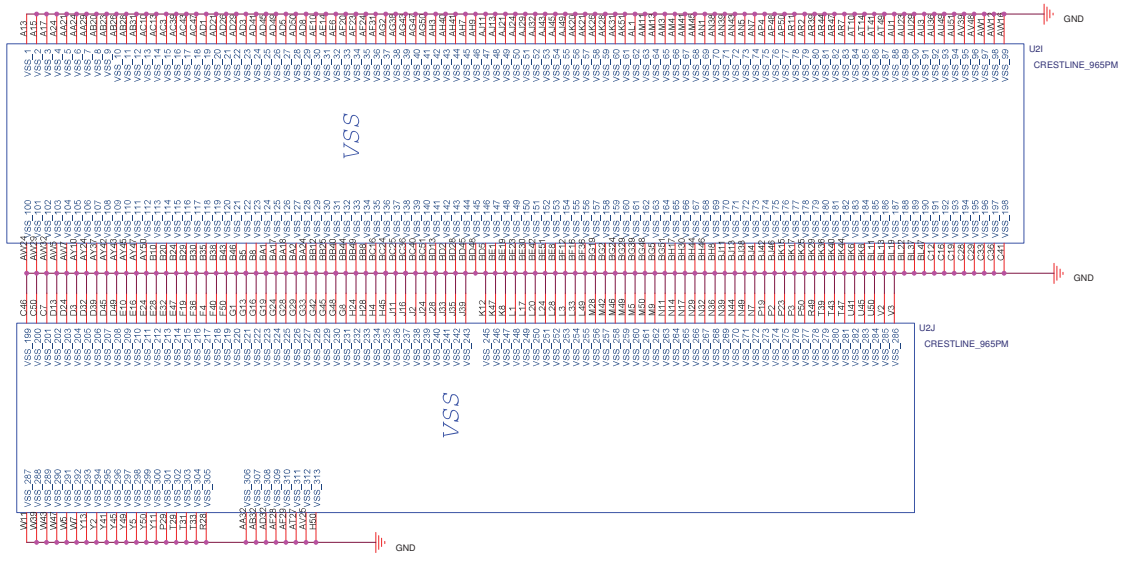

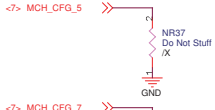

CFG5 : DMI STRAP
HIGH = DMI X 4 (Default)
LOW = DMI X 2

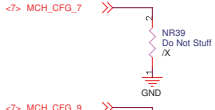

CFG7 : CPU STRAP
HIGH = Mobile CPU (Default)
LOW = Reserved

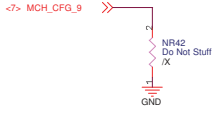

CFG9 : PCIE GRAPHIC LANE
LOW = REVERSE LANE
HIGH = Normal Operation (Default)

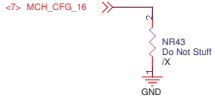

CFG16 : Dynamic ODT STRAP
Low = Dynamic ODT Disabled
HIGH = Dyanamic ODT Enabled (default)

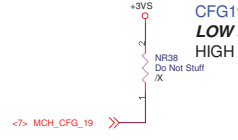

CFG19 : DMI LANE REVERSAL
LOW = NORMAL (default)
HIGH = LANES REVERSED

CFG20 : SDVO/PCIE CONCURRENT MODE
LOW = ONLY SDVO or PCIE is Operational
HIGH = SDVO and PCIE are operating simultaneously via the PEG port

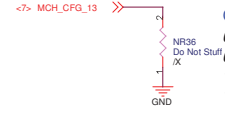

CFG [13:12] : XOR/ALL-Z
00 = Reserved
01= XOR Mode Enabled
10= All-Z Mode Enabled
11= Normal Operation (Default)

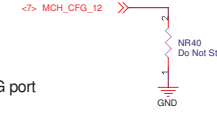

http://hobi-elektronika.net

1.1

ASUS	Title : GND/Strapping (6)		
ASUSTeK COMPUTER INC	Engineer: Alan Chen		
Size: Custom	Project Name: Z96S		Rev: 2.0
Date: 星期三, 五月 30, 2007	Sheet 11 of 67		

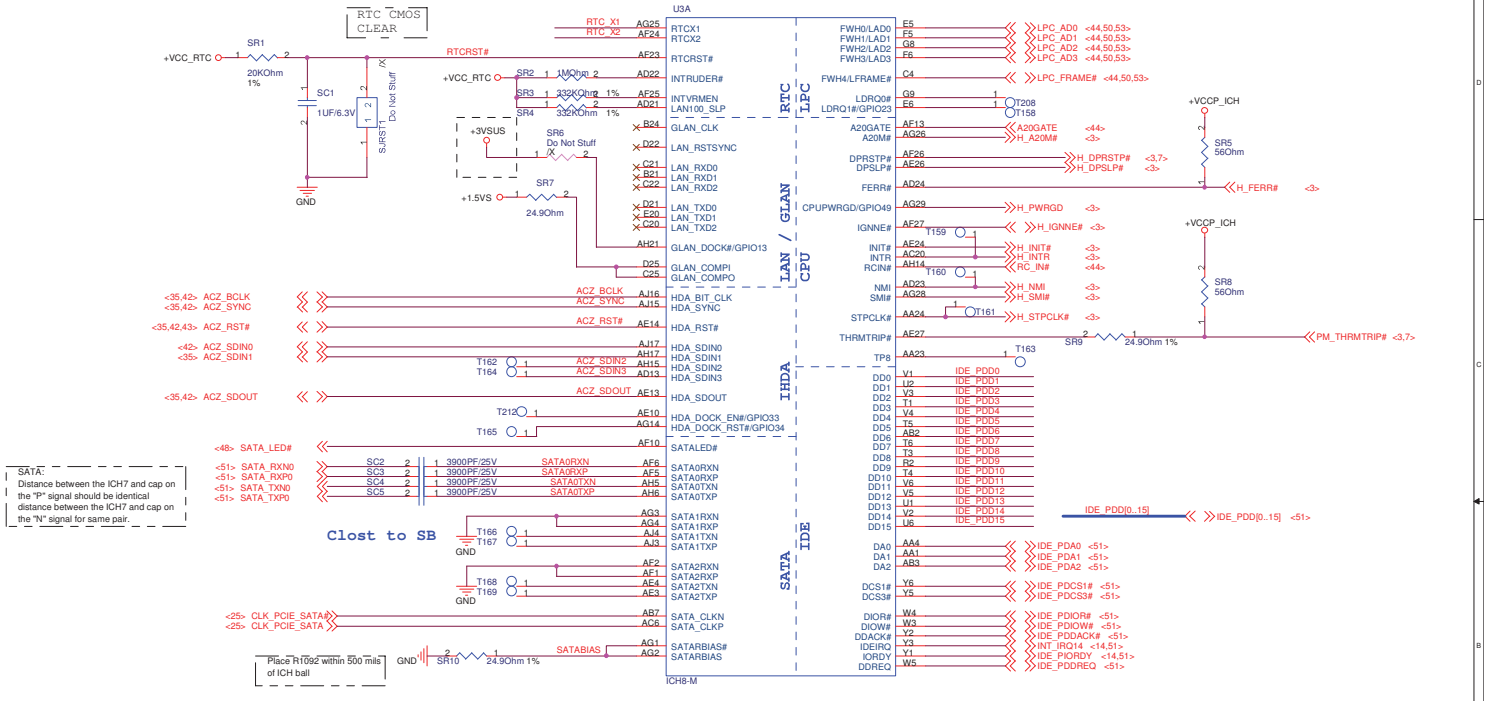

SATA if it non-used,
1)SATA[0:3]RXpn SATABIAS,SATABIAS# and SATA_CLKpn should be PD.
2)SATA[0:3]TXpn and SATALED# NO connect.

RTC BAT

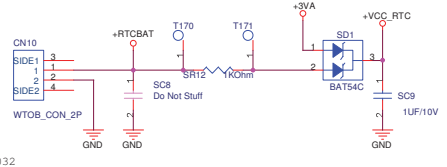

RTC Battery
P/N=07-016322032

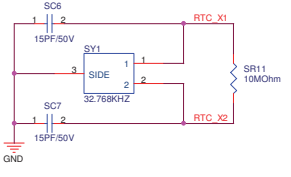

1.1

ASUS ASUSTeK COMPUTER INC

Title : ICH8-M (1)

Engineer: Alan Chen

Size	Project Name	Rev
Custom	Z96S	2.0

Date: 星期三, 五月 30, 2007 Sheet 12 of 67

http://hobi-elektronika.net

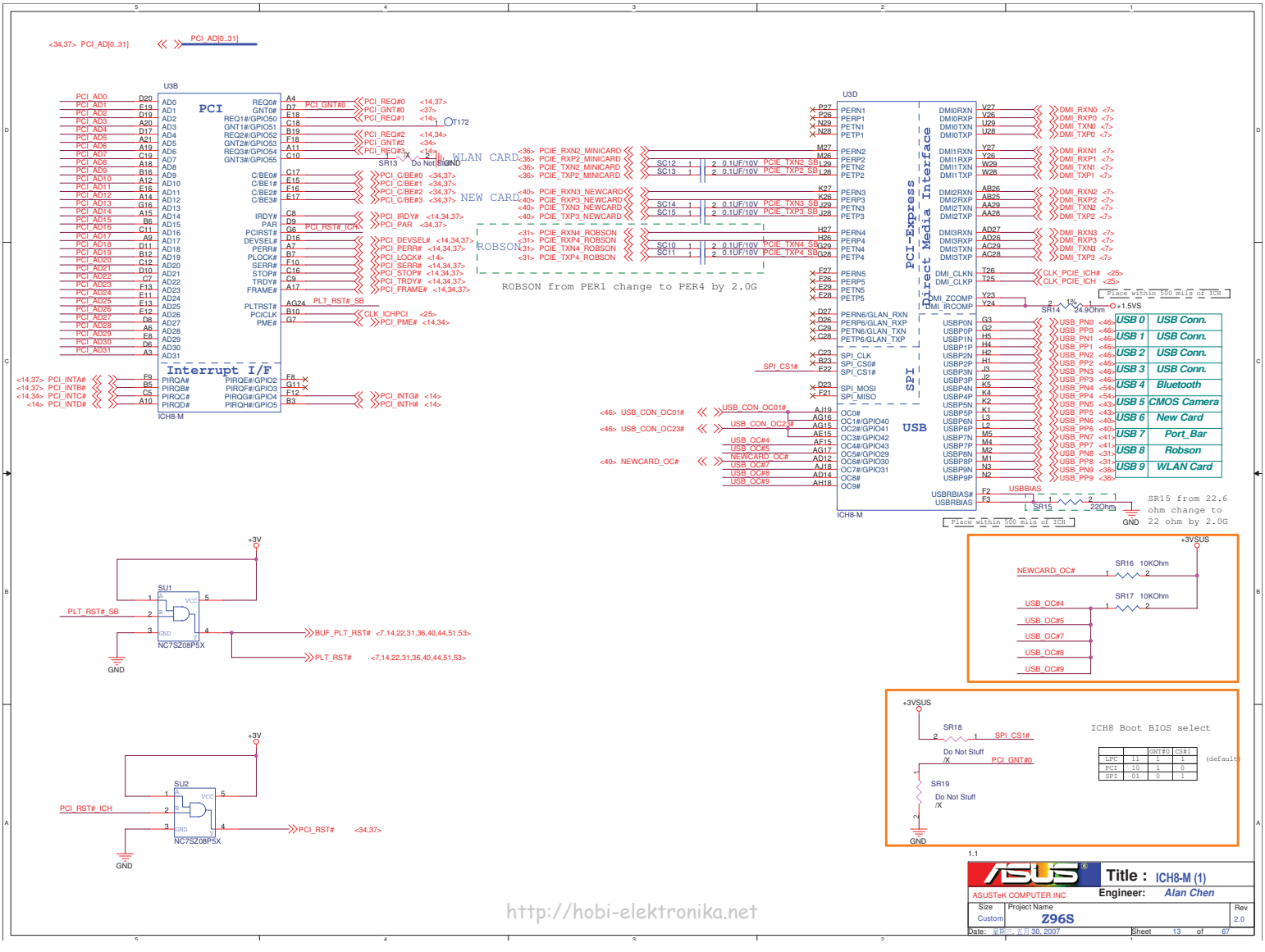

http://hobi-elektronika.net

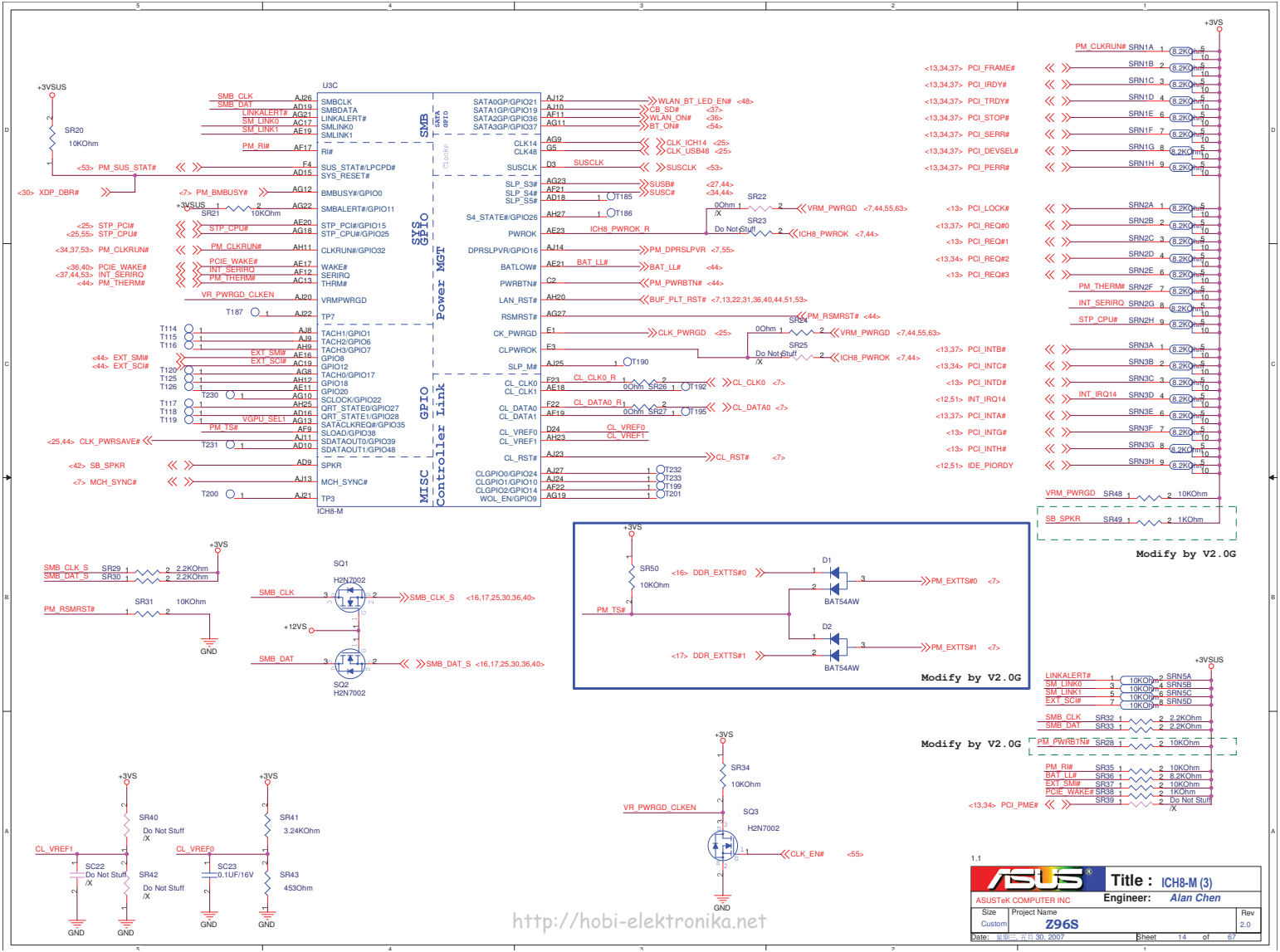

http://hobi-elektronika.net

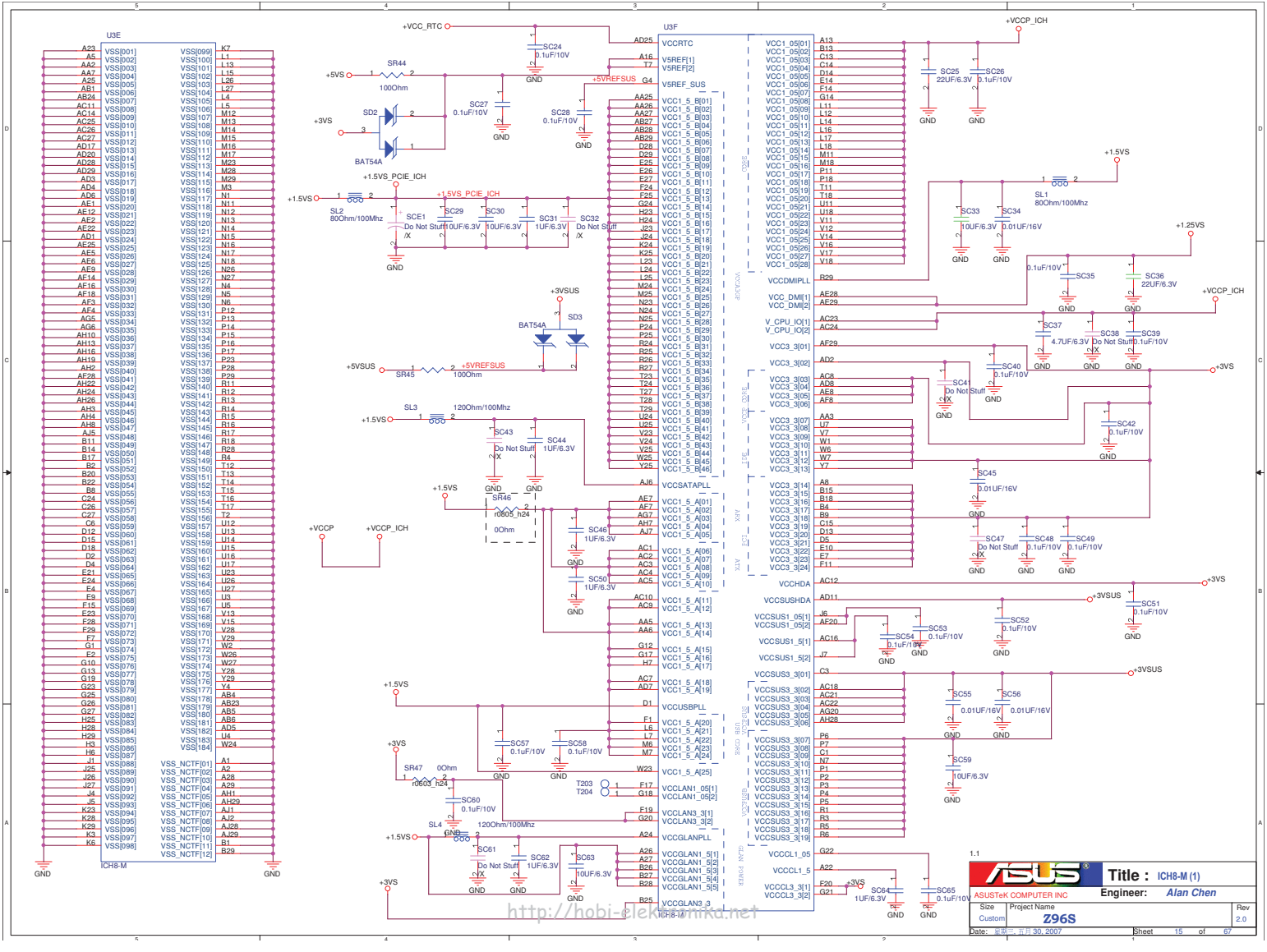
U3E
ICH8-M
U3F
ICH8-M
+VCC_RTC
SR44
100Ohm
+5VS
SD2
BAT54A
+3VS
SC27
0.1uF/10V
SC28
0.1uF/10V
SC24
0.1uF/10V
+5VREFSUS
+1.5VS_PCIE_ICH
+1.5VS
SL2
80Ohm/100Mhz
SCE1
Do Not Stuff
/X
SC29
10UF/6.3V
SC30
10UF/6.3V
SC31
1UF/6.3V
SC32
Do Not Stuff
/X
+3VSUS
SD3
BAT54A
+5VSUS
SR45
100Ohm
SL3
120Ohm/100Mhz
SC43
Do Not Stuff
/X
SC44
1UF/6.3V
SR46
r0603_h24
0Ohm
+VCCP
+VCCP_ICH
SC46
1UF/6.3V
SC50
1UF/6.3V
SR47
0Ohm
r0603_h24
SC60
0.1uF/10V
SL4
120Ohm/100Mhz
SC61
Do Not Stuff
SC62
1UF/6.3V
SC63
10UF/6.3V
SC57
0.1uF/10V
SC58
0.1uF/10V
T203
T204
SC25
22UF/6.3V
SC26
0.1uF/10V
SL1
80Ohm/100Mhz
SC33
10UF/6.3V
SC34
0.01uF/16V
SC35
0.1uF/10V
SC36
22UF/6.3V
SC37
4.7UF/6.3V
SC38
Do Not Stuff
SC39
0.1uF/10V
SC40
0.1uF/10V
SC41
Do Not Stuff
SC42
0.1uF/10V
SC45
0.01UF/16V
SC47
Do Not Stuff
SC48
0.1uF/10V
SC49
0.1uF/10V
SC51
0.1uF/10V
SC52
0.1uF/10V
SC53
0.1uF/10V
SC54
0.1uF/10V
SC55
0.01UF/16V
SC56
0.01UF/16V
SC59
10UF/6.3V
SC64
1UF/6.3V
SC65
0.1uF/10V
GND
+1.25VS
+3VS
+3VSUS
+VCCP_ICH
ASUS
Title : ICH8-M (1)
ASUSTeK COMPUTER INC
Engineer: Alan Chen
Size Custom
Project Name Z96S
Rev 2.0
Date: 星期三, 五月 30, 2007
Sheet 15 of 67
http://hobi-elektronika.net

REV Type

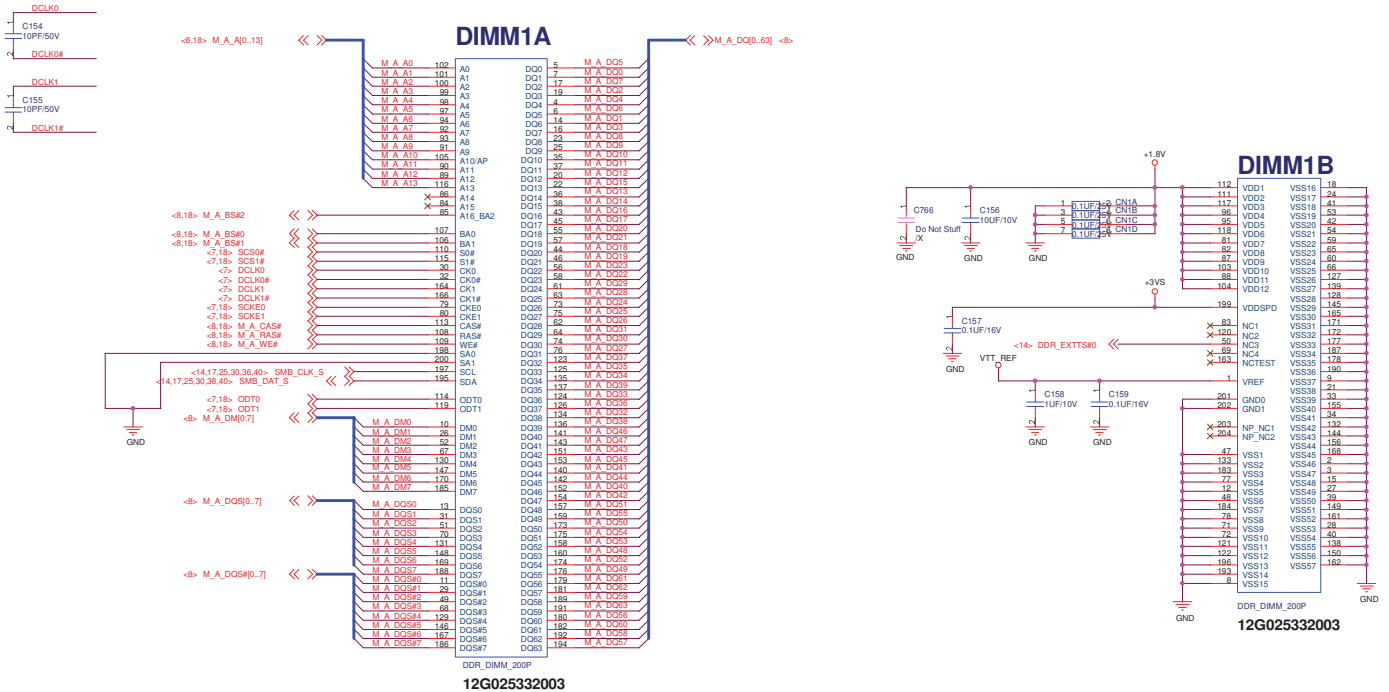

1.1

ASUSTeK COMPUTER INC.

Title : DDR2 SO-DIMM0

Engineer: Alan Chen

Size	Project Name	Rev
Custom	Z96S	2.0

Date: 星期三, 六月 30, 2007 Sheet 16 of 67

http://hobi-elektronika.net

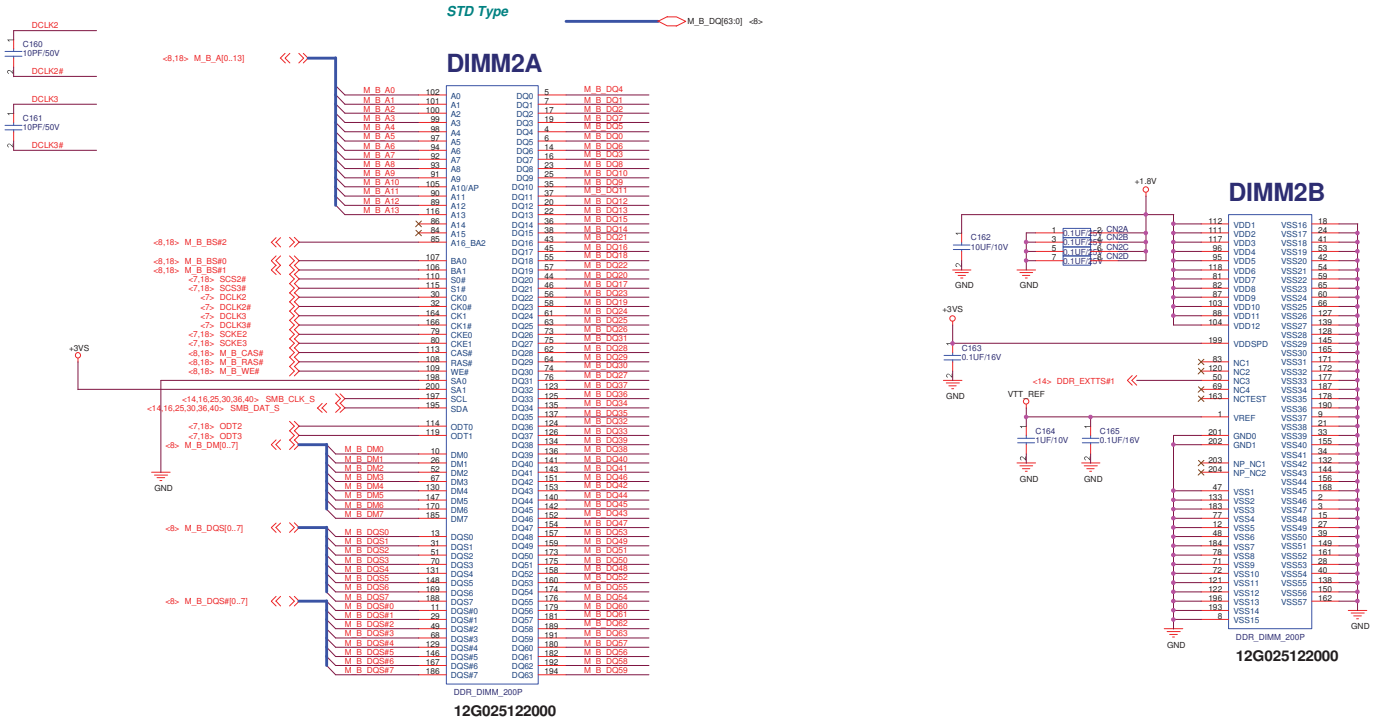

1.1

ASUS	Title : DDR2 SO-DIMM1	
ASUSTeK COMPUTER INC. NB1	Engineer: Alan Chen	
Size: Custom	Project Name: Z96S	Rev: 2.0
Date: 星期三, 六月 30, 2007	Sheet 17 of 67	

http://hobi-elektronika.net

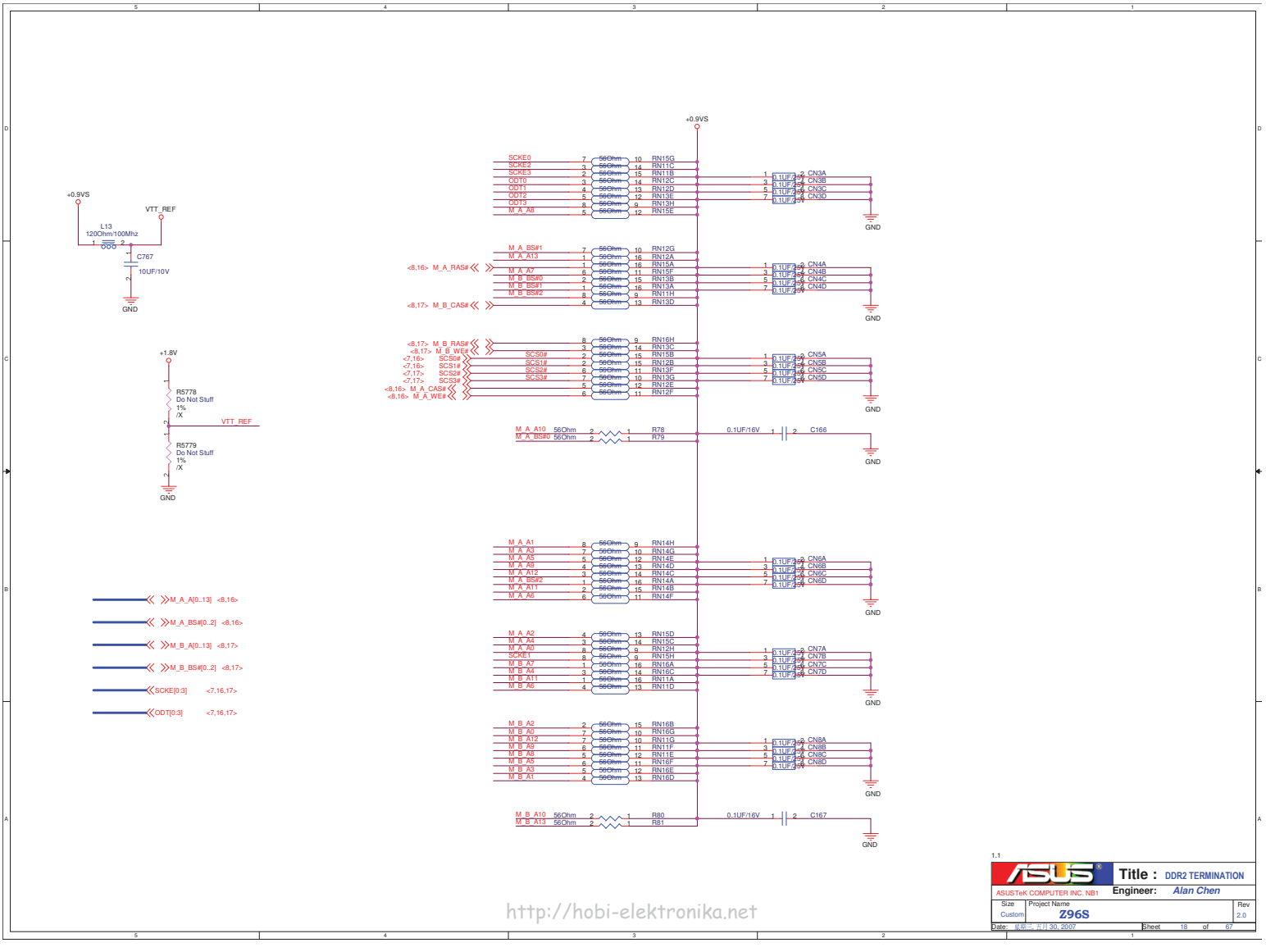

http://hobi-elektronika.net

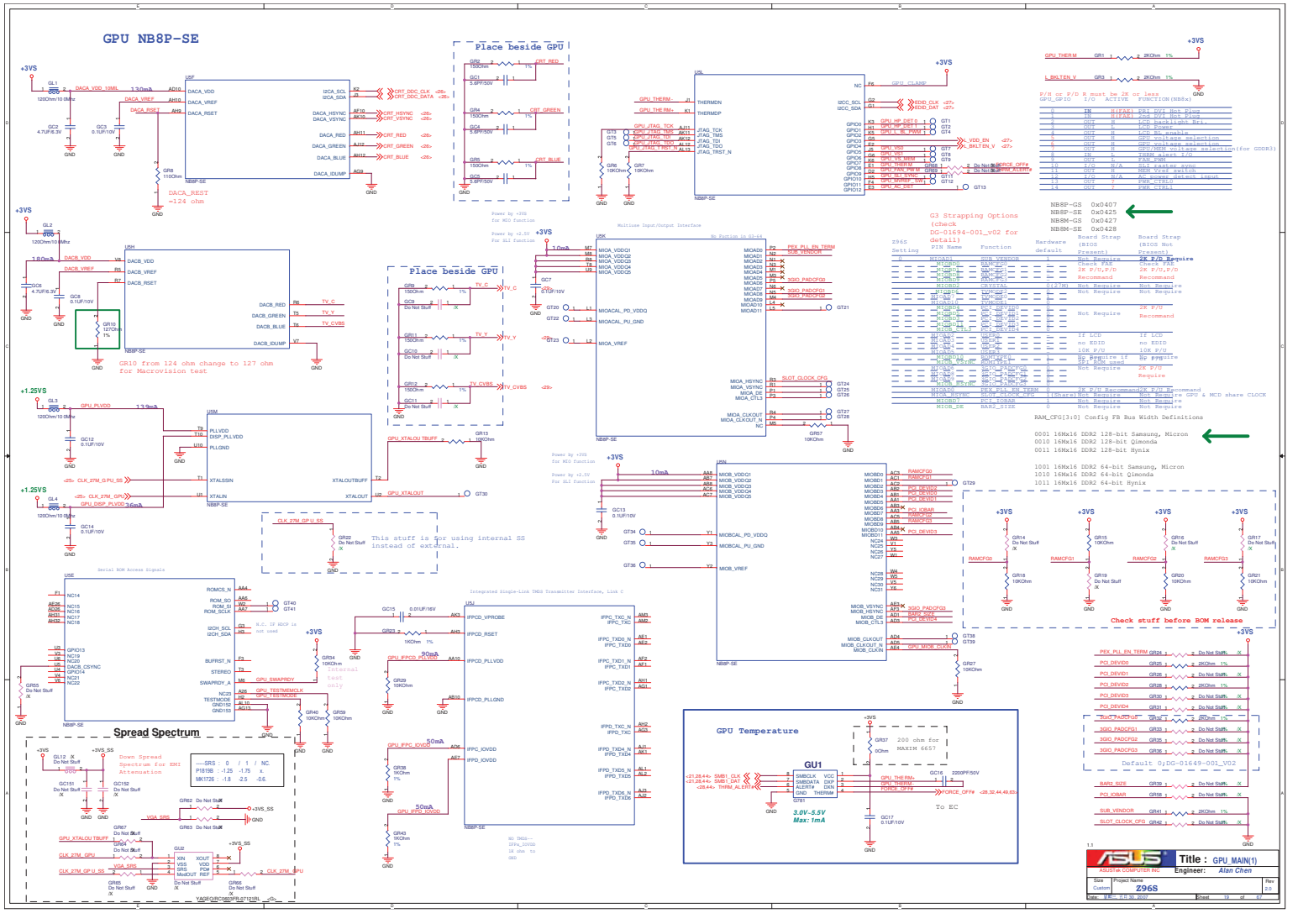

http://hobi-elektronika.net

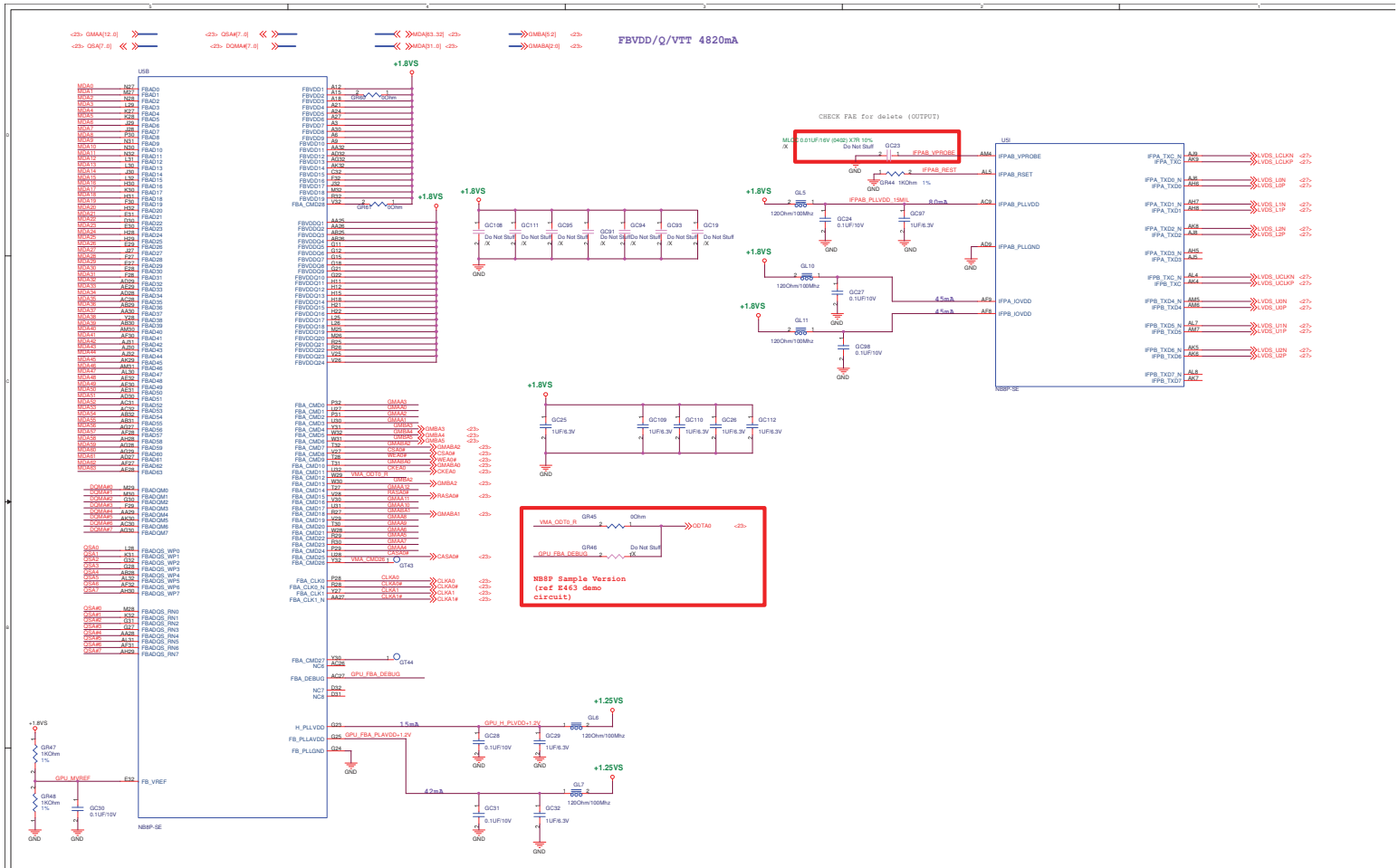

http://hobi-elektronika.net

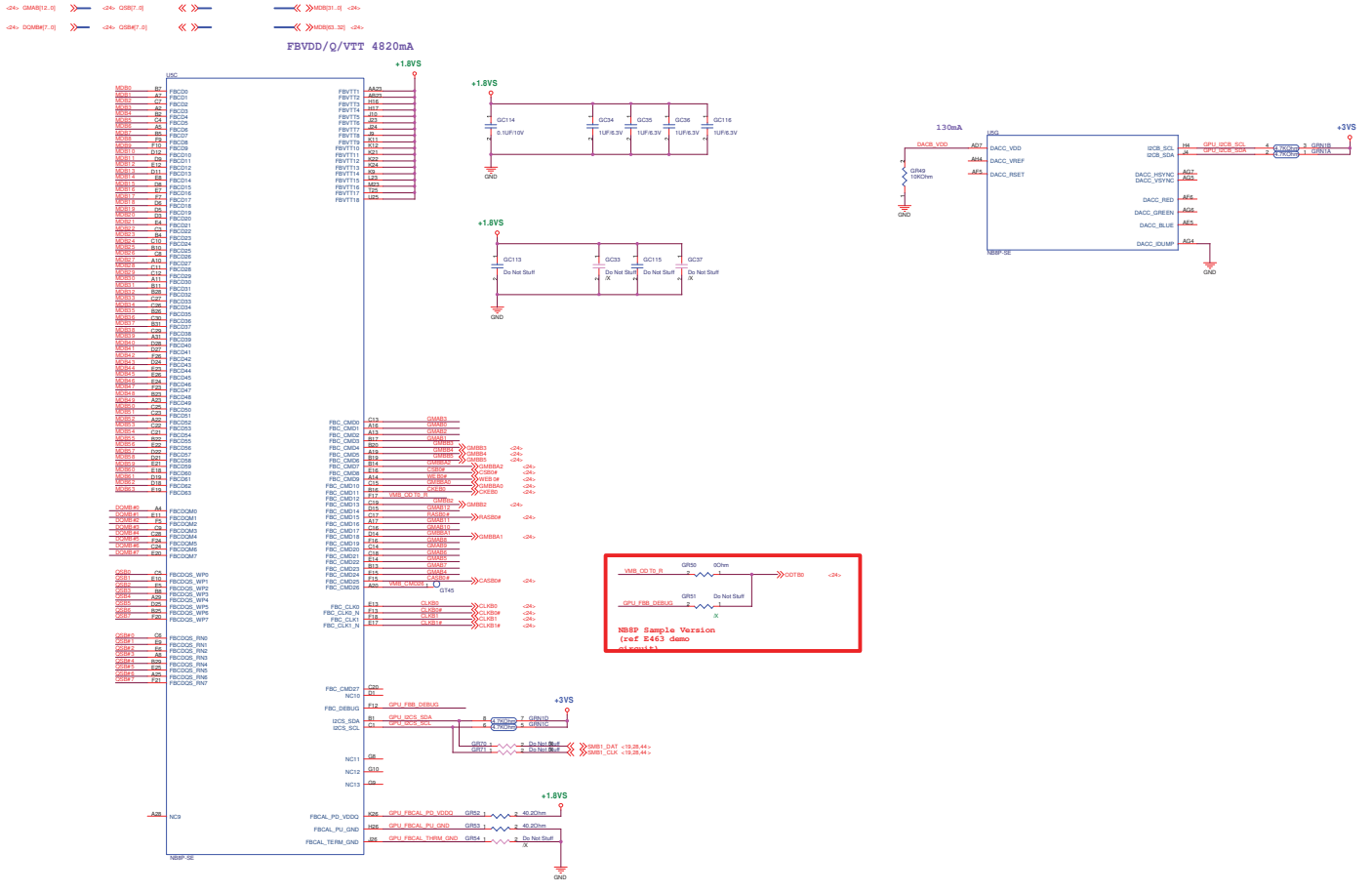

http://hobi-elektronika.net

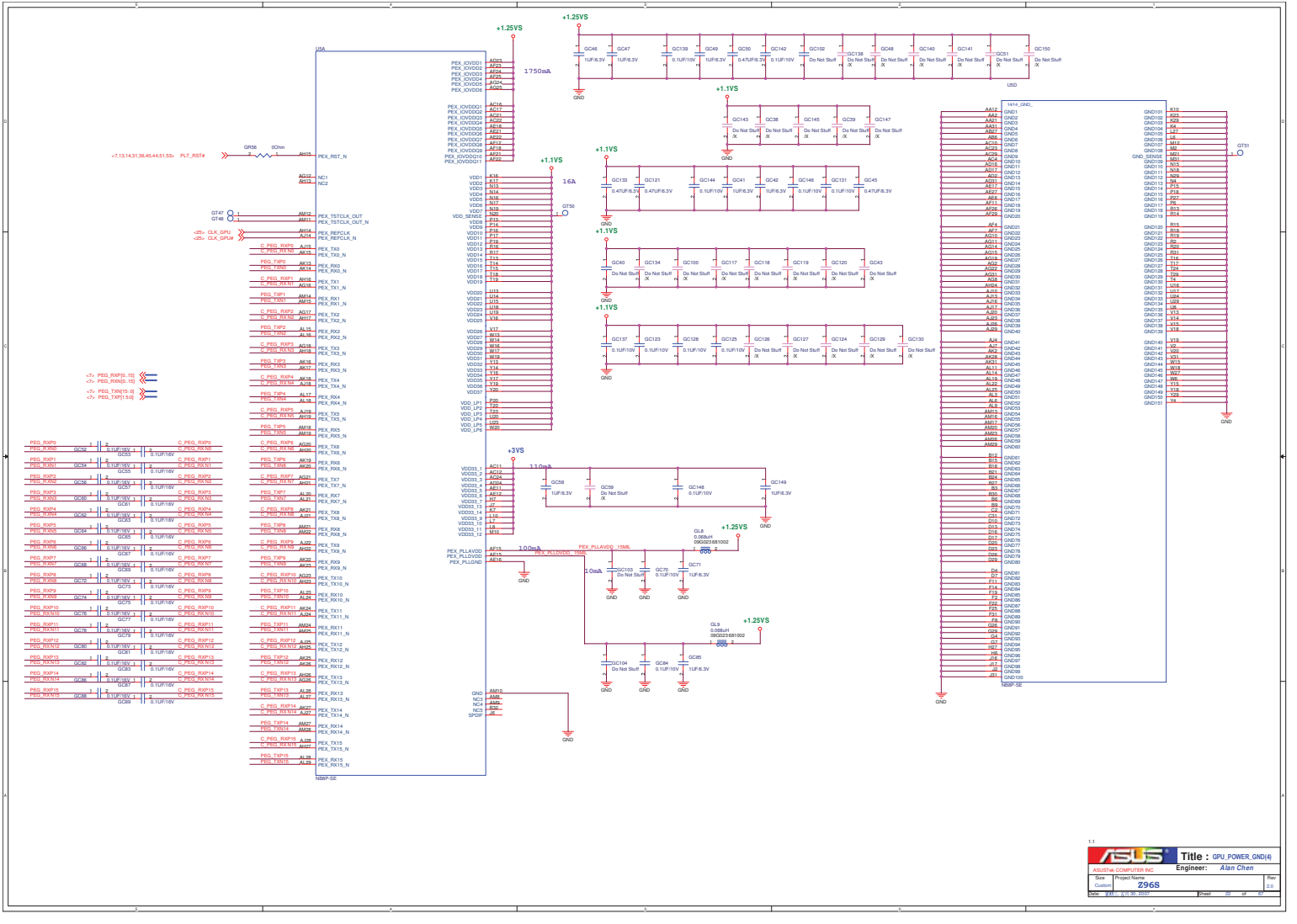

http://hobi-elektronika.net

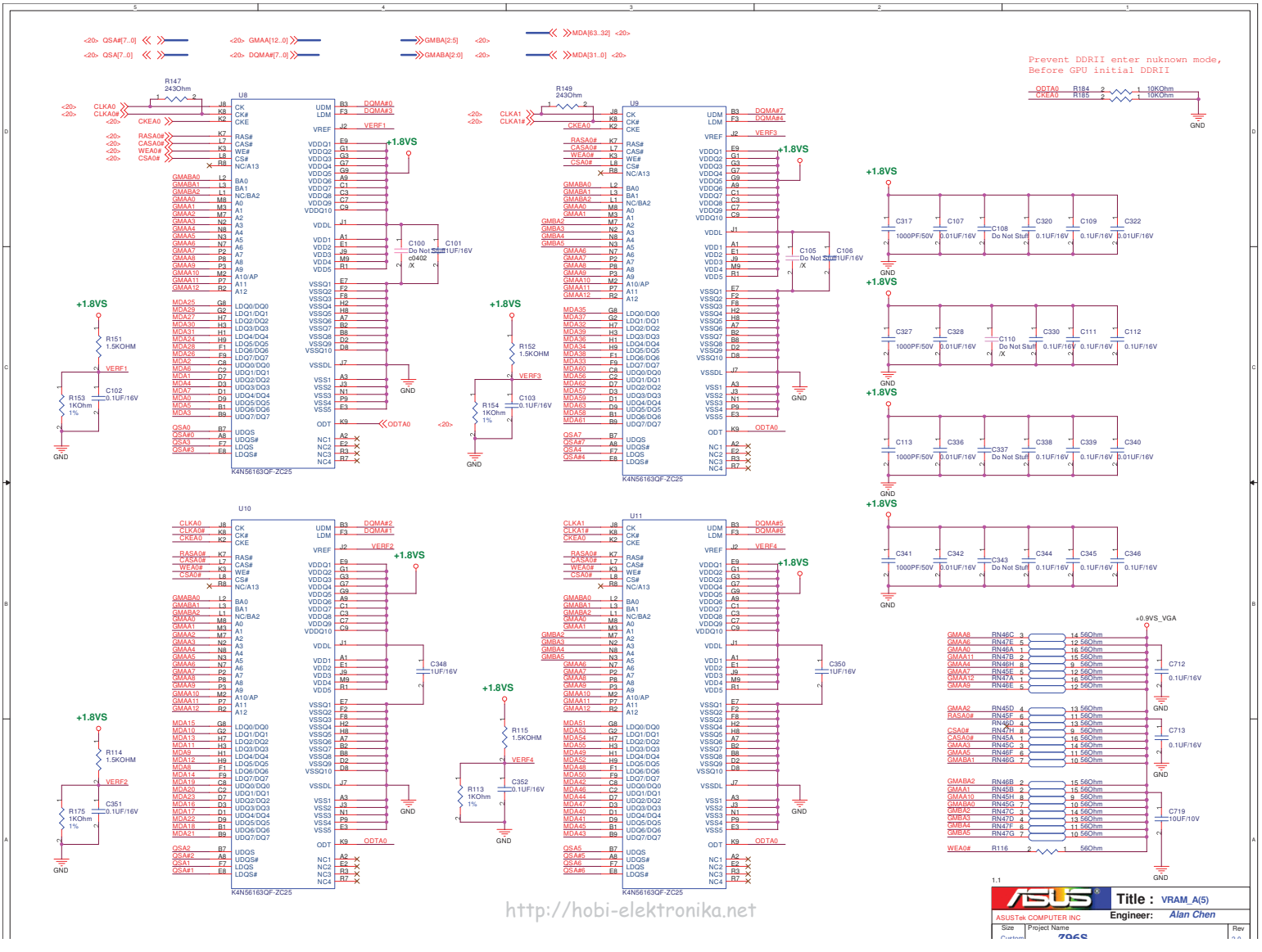

http://hobi-elektronika.net

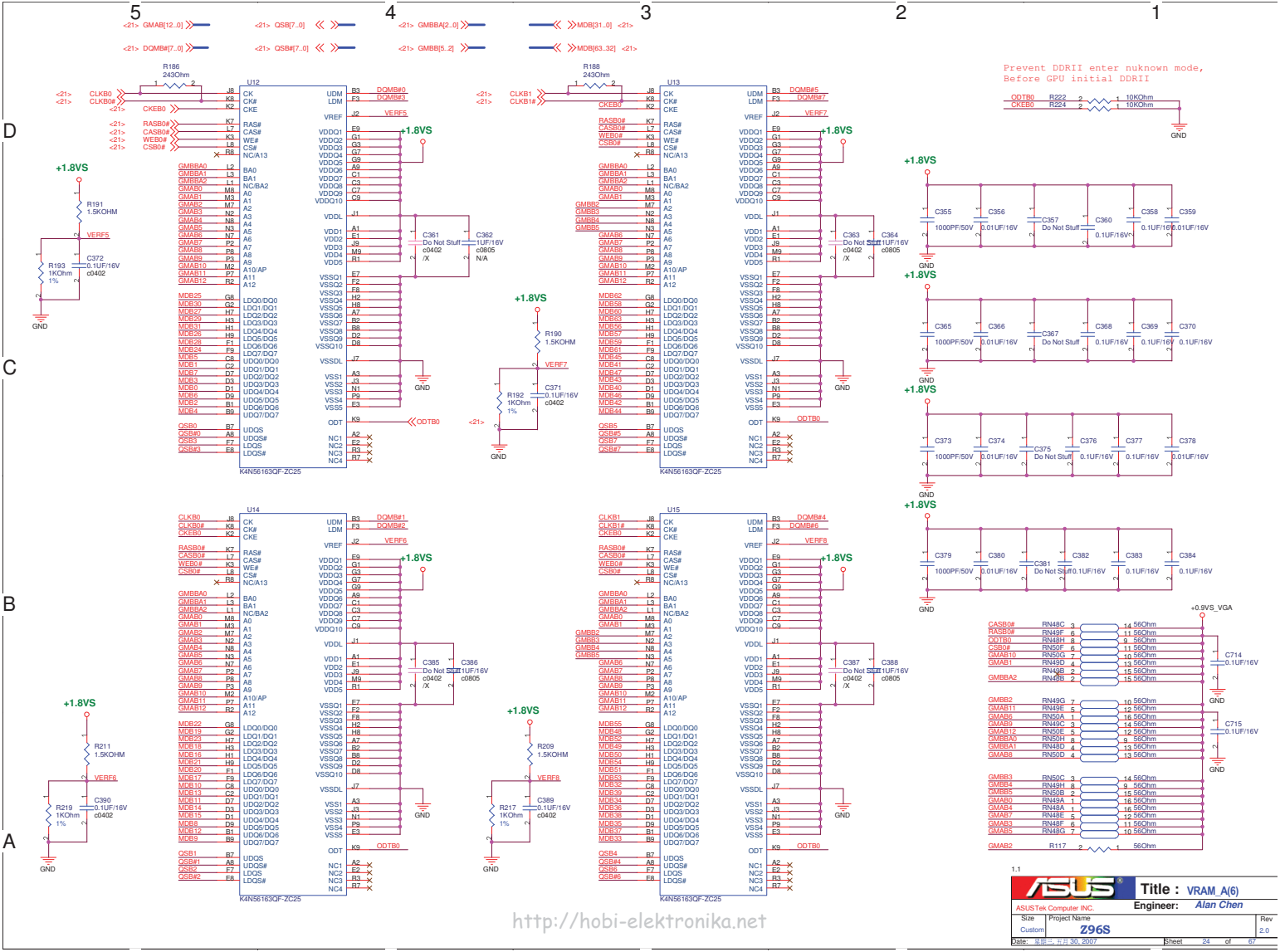

ASUS	Title : VRAM_A(6)		
ASUSTek Computer INC.	Engineer: Alan Chen		
Size: Custom	Project Name: Z96S	Rev: 2.0	
Date: 星期三, 11月 30, 2007	Sheet 24 of 67		

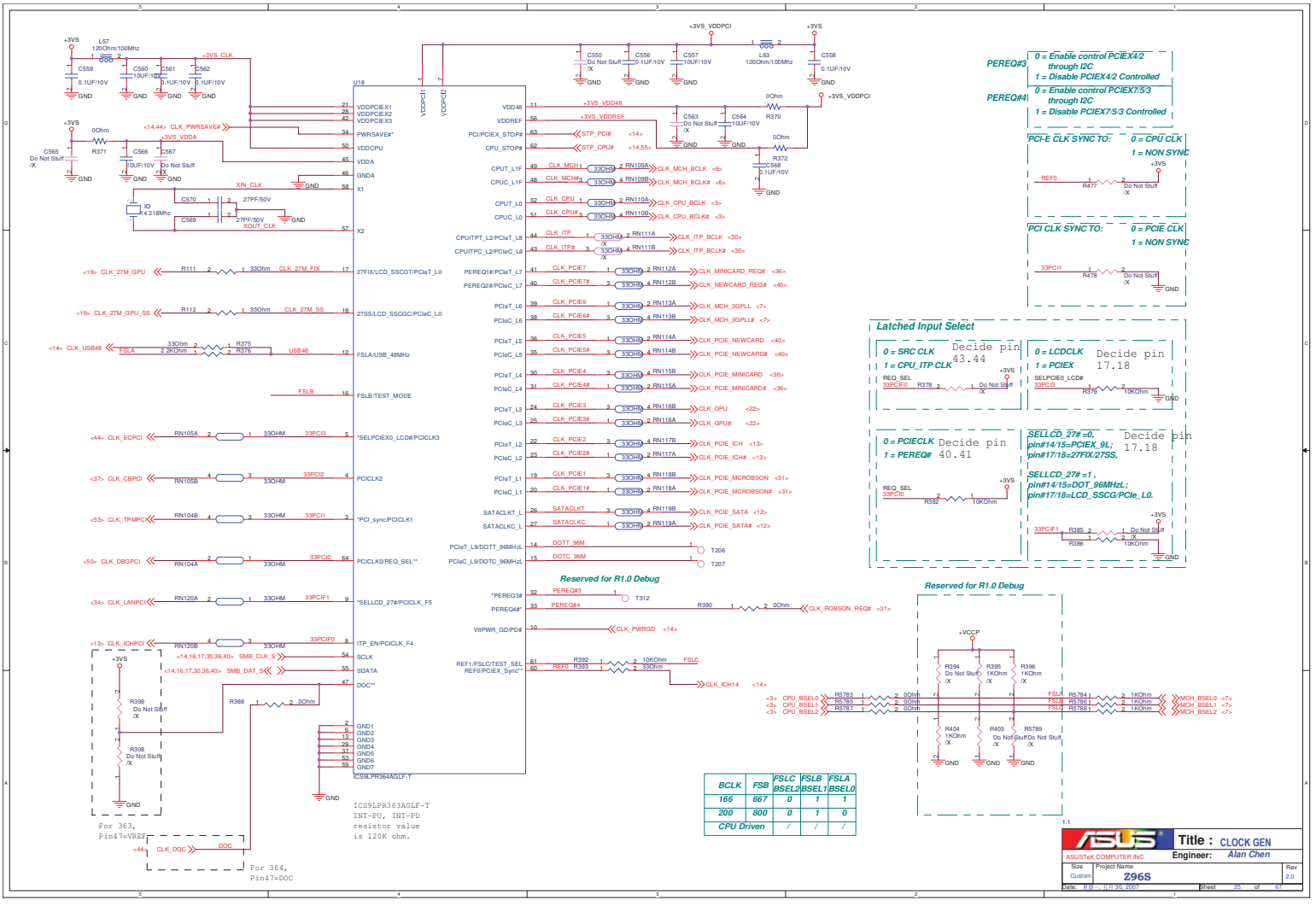

BCLK	FSB	FSLC BSEL2	FSLB BSEL1	FSLA BSEL0
166	667	0	1	1
200	800	0	1	0
CPU Driven	/	/	/	

http://hobi-elektronika.net

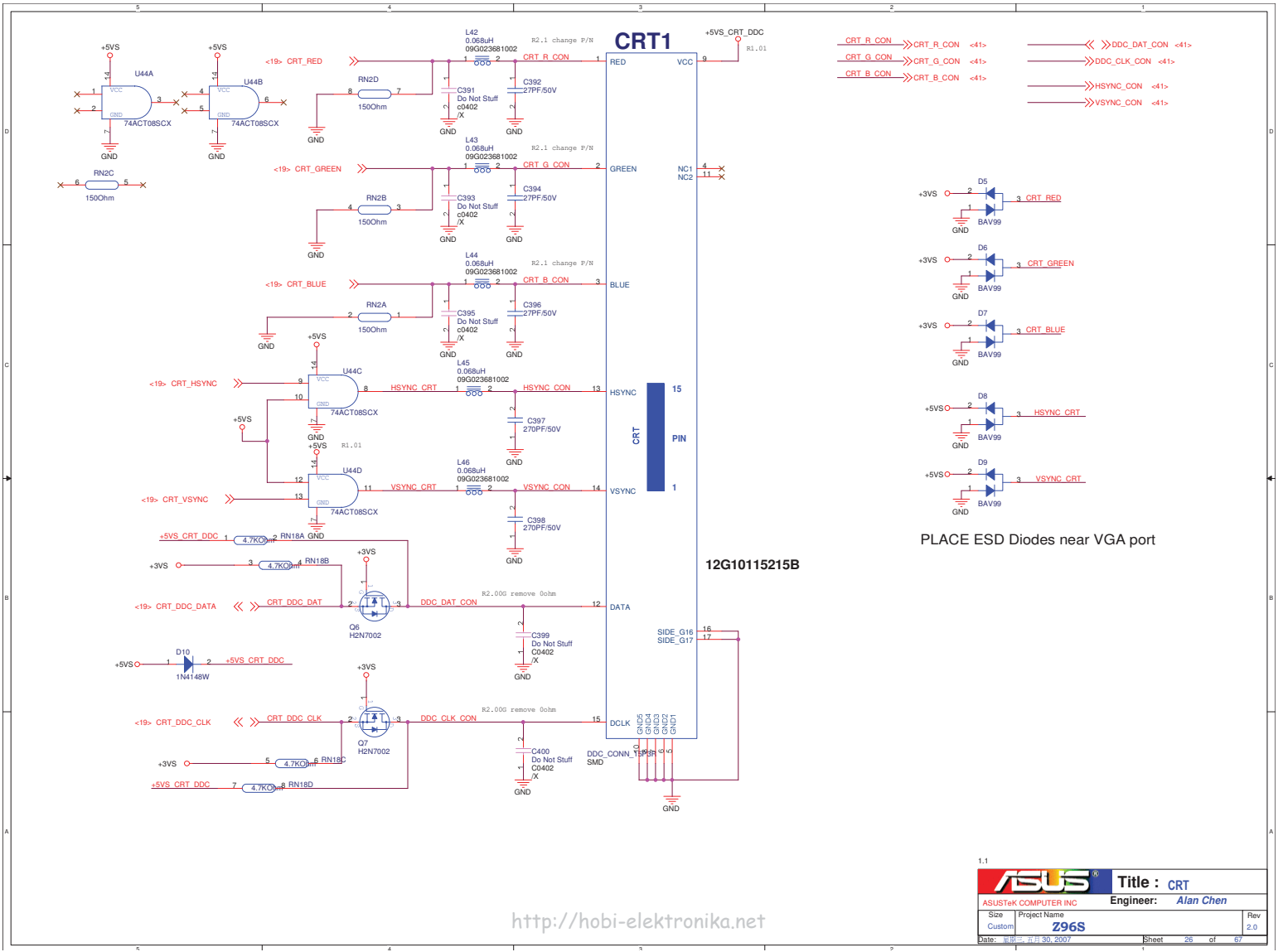
CRT1
12G10115215B
PLACE ESD Diodes near VGA port
Title : CRT
ASUSTeK COMPUTER INC
Engineer: Alan Chen
Size Custom
Project Name Z96S
Rev 2.0
Date: 星期三, 六月 30, 2007
Sheet 26 of 67
http://hobi-elektronika.net

LCD Backlight Control

LCD Power

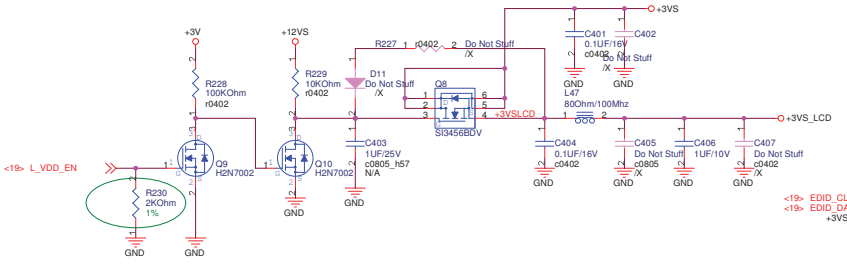

R230 from 100k
change to 2k for
nVIDIA NB8P-SE

Cable Requirement:
Impedence: 100 ohm +/- 10%
Length Mismatch <= 10 mils
Twisted Pair(Not Ribbon)
Maximum Length <= 16"

LCD LVDS Interface

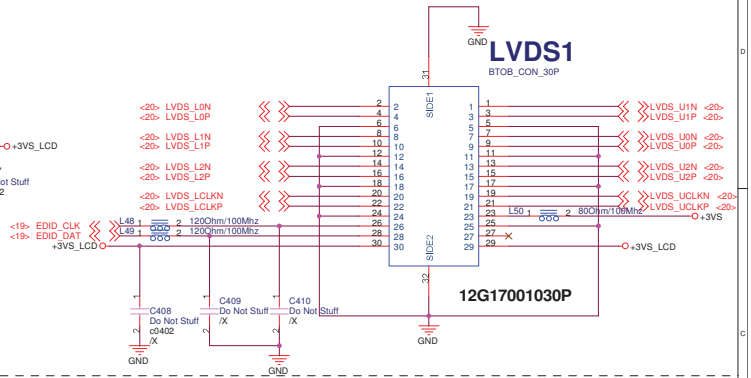

INVERTER Interface/Speaker CONN.

BIOS
BACK_OFF#:When user push "Fn+F7" button, BIOS active this pin to turn off back light.

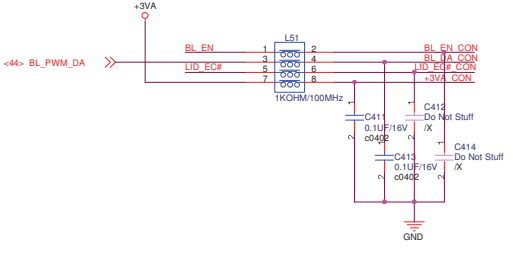

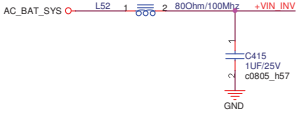

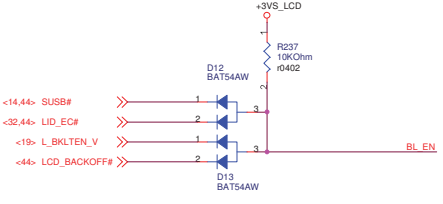

INVERTER1

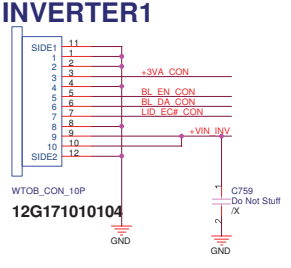

http://hobi-elektronika.net

1.1

ASUS	Title : LVDS & INVERTER		
ASUSTeK COMPUTER INC	Engineer: Alan Chen		
Size: Custom	Project Name: Z96S		Rev: 2.0
Date: 星期三, 六月 30, 2007	Sheet 27 of 67		

Thermal Sensor

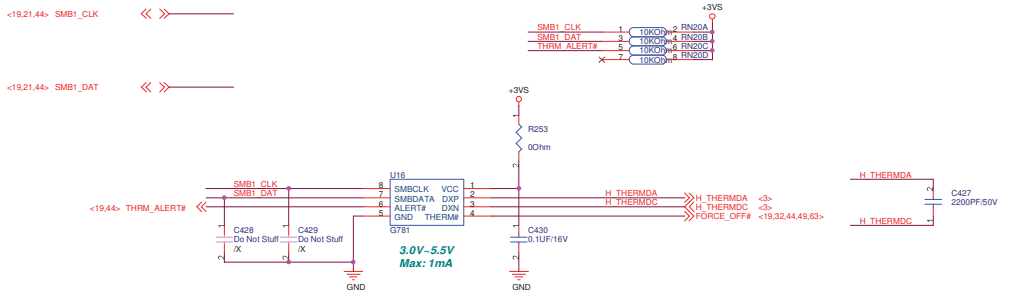

DC FAN Control

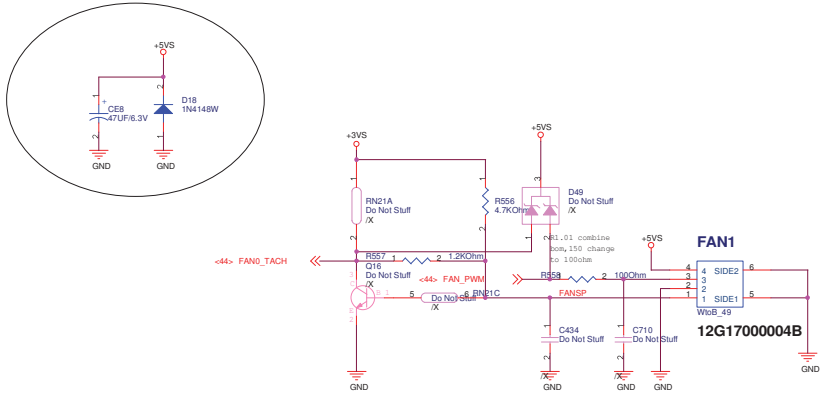

CPU FAN will be forced on:
1) Thermal Sensor Over-temperture
2) WATCHDOG asserted by EC

1.1

ASUS	Title : THER SENSOR & FAN	
ASUSTeK COMPUTER INC.	Engineer: Alan Chen	
Size: Custom	Project Name: Z96S	Rev: 2.0
Date: 星期三, 五月 30, 2007	Sheet 28 of 67	

http://hobi-elektronika.net

TV OUT

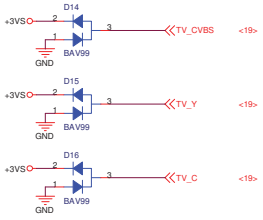

PLACE ESD
Diodes near
TV port

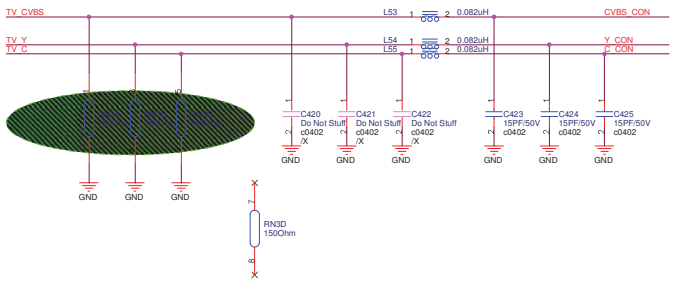

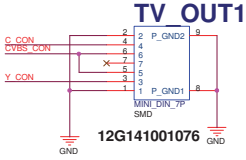

http://hobi-elektronika.net

1.1

ASUS	Title : TV OUT & DVI CON.	
ASUSTeK COMPUTER INC	Engineer: Alan Chen	
Size: Custom	Project Name: Z96S	Rev: 2.0
Date: 星期三, 五月 30, 2007	Sheet 29 of 67	

ITP

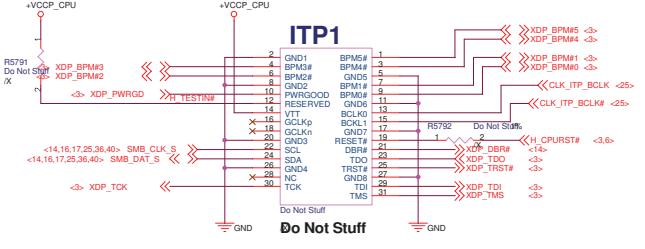

1.1

ASUSTek Computer INC.

Title : ITP

Engineer: Alan Chen

Size	Project Name	Rev
Custom	Z96S	2.0

Date: 星期三, 8月 30, 2007 Sheet 30 of 67

http://hobi-elektronika.net

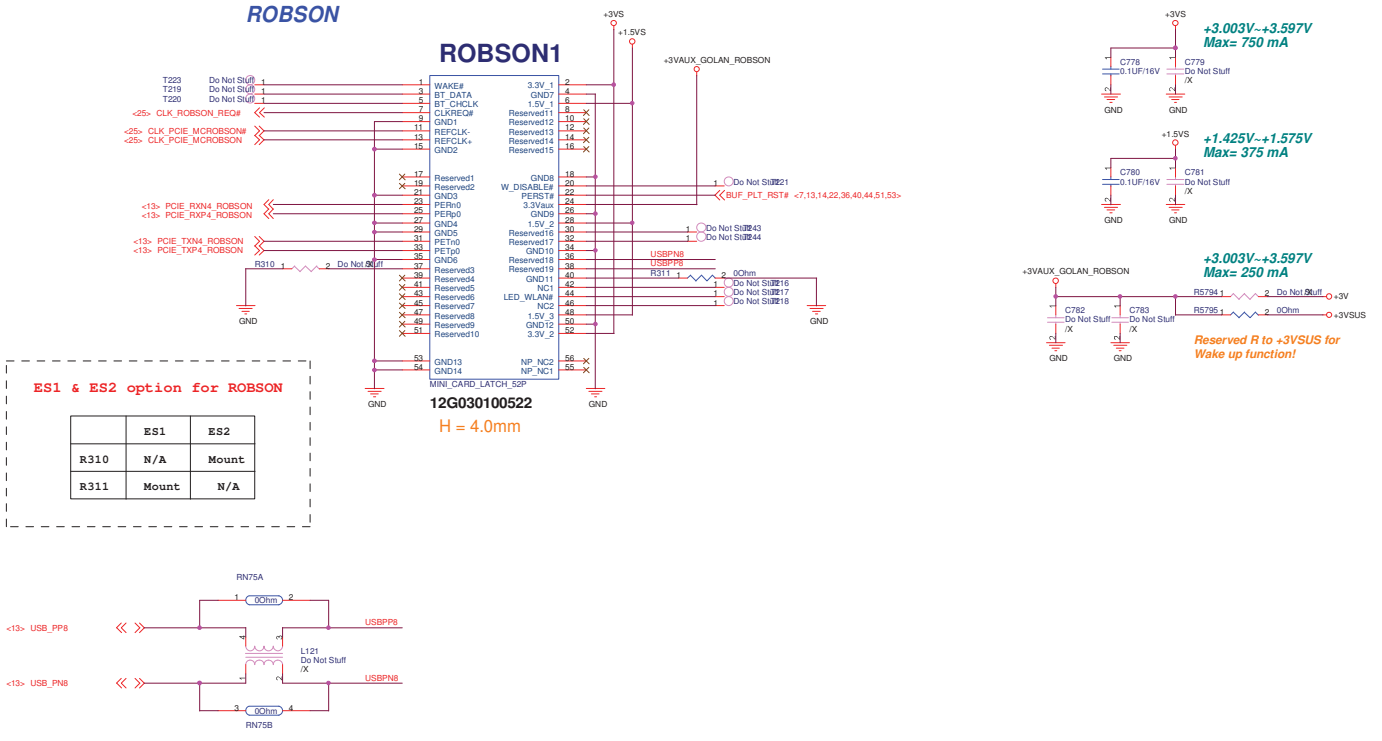

http://hobi-elektronika.net

1.1

ASUS Title : Mini Card

ASUSTek Computer INC. Engineer: Alan Chen

Size	Project Name	Rev
Custom	Z96S	2.0

Date: 星期三, 元月 30, 2007 Sheet 31 of 67

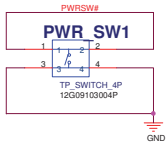

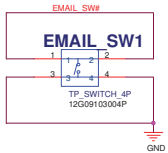

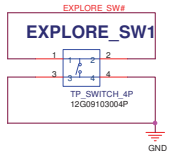

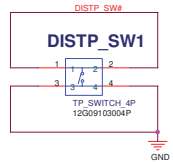

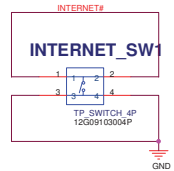

SHUT_DOWN#

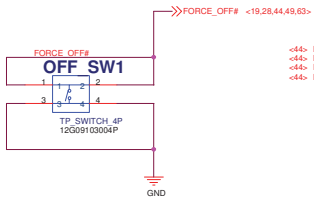

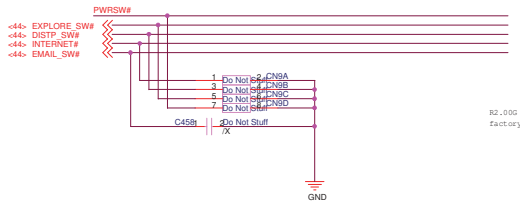

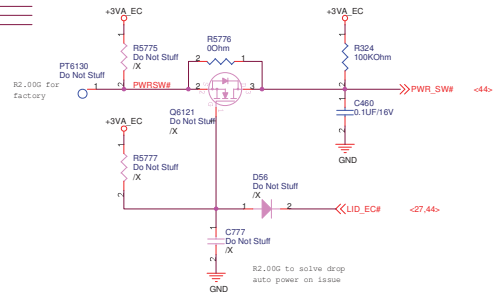

1.1

ASUSTeK COMPUTER INC	Title : Power on & Res Freq	
	Engineer: Alan Chen	
Size: Custom	Project Name: Z96S	Rev: 2.0
Date: 星期三, 六月 30, 2007	Sheet 32 of 67	

http://hobi-elektronika.net

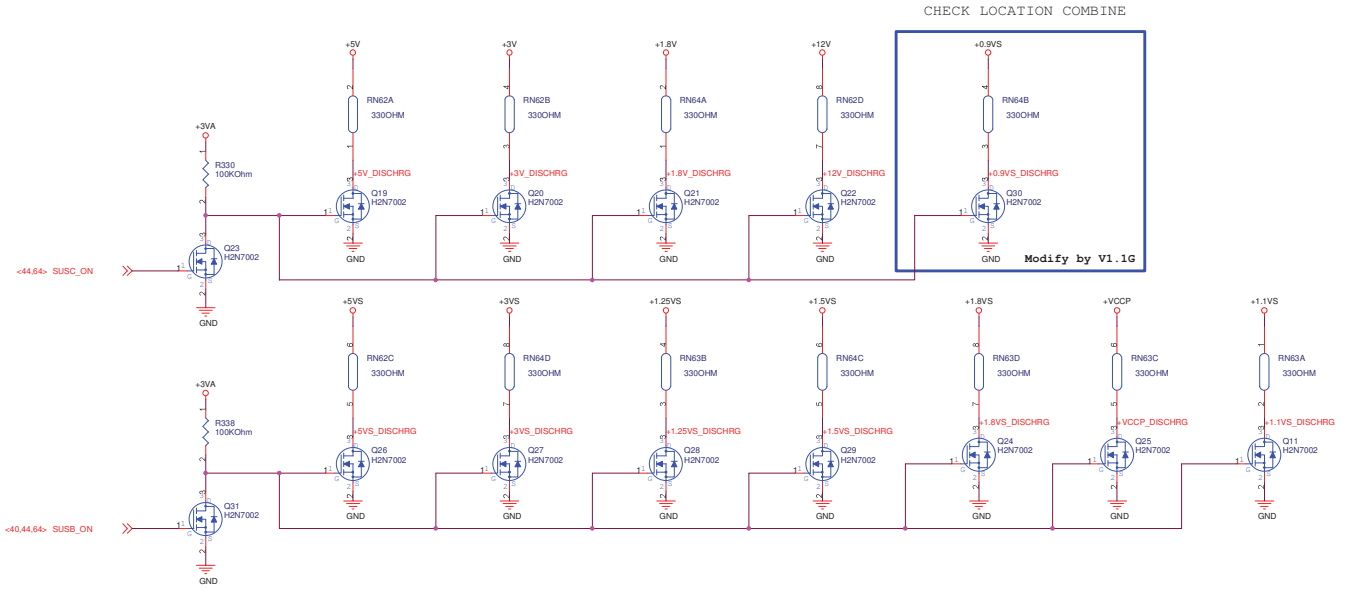

1.1

ASUSTeK COMPUTER INC. NB1	Title : DISCHARGE & EMI CAP	
	Engineer: Alan Chen	
Size: Custom	Project Name: Z96S	Rev: 2.0
Date: 星期三, 六月 30, 2007	Sheet 33 of 67	

http://hobi-elektronika.net

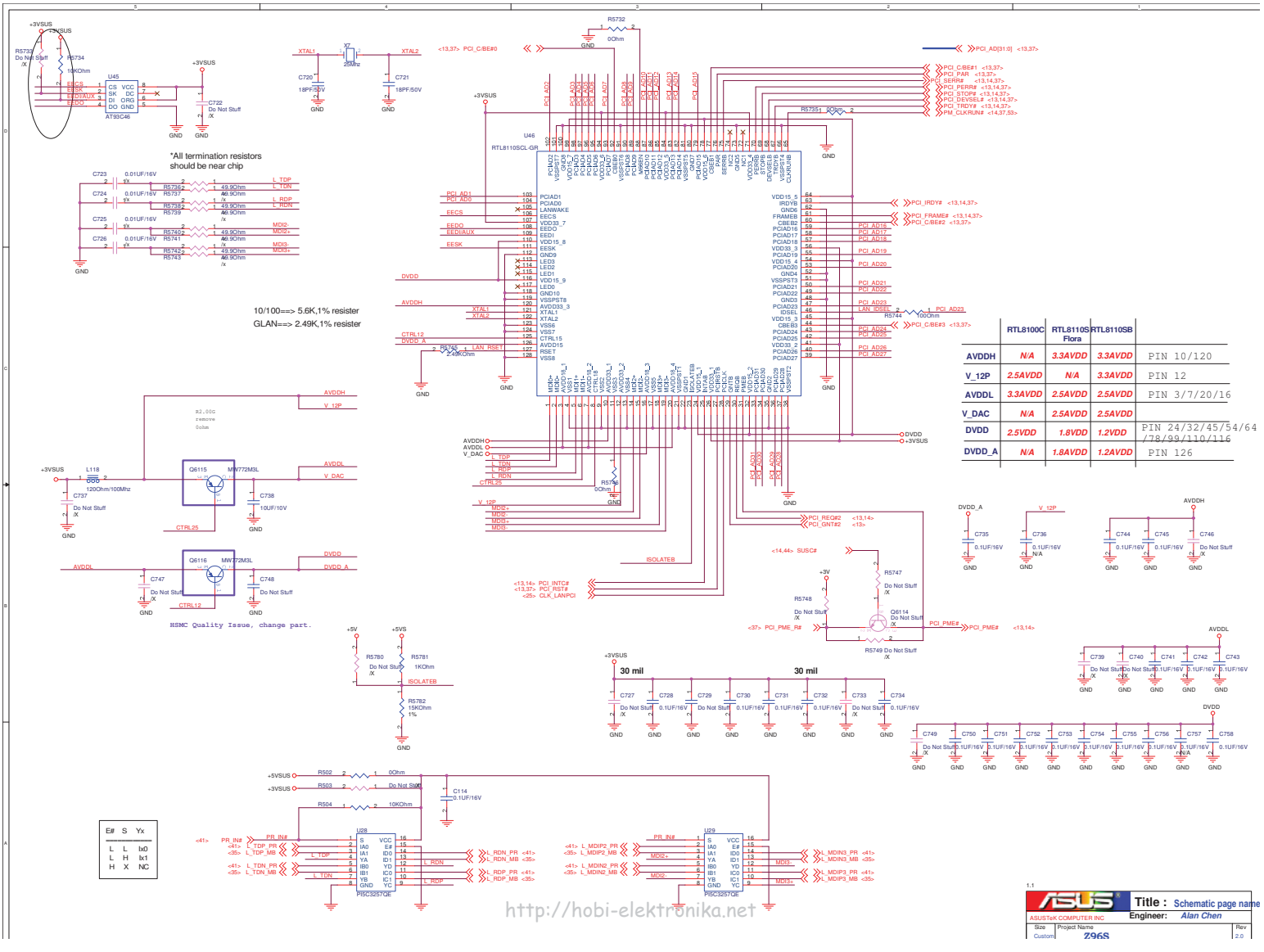

	RTL8100C	RTL8110S Flora	RTL8110SB	
AVDDH	N/A	3.3AVDD	3.3AVDD	PIN 10/120
V_12P	2.5AVDD	N/A	3.3AVDD	PIN 12
AVDDL	3.3AVDD	2.5AVDD	2.5AVDD	PIN 3/7/20/16
V_DAC	N/A	2.5AVDD	2.5AVDD	
DVDD	2.5VDD	1.8VDD	1.2VDD	PIN 24/32/45/54/64 /78/99/110/116
DVDD_A	N/A	1.8AVDD	1.2AVDD	PIN 126

E#	S	Yx
L	L	lx0
L	H	lx1
H	X	NC

http://hobi-elektronika.net

MDC CONN.

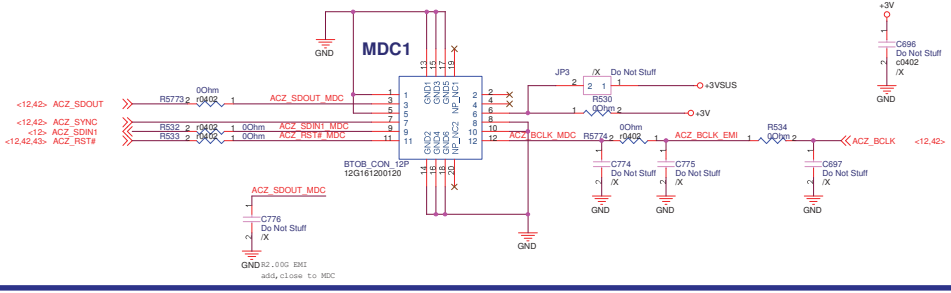

RING1

12G17100002C

RJ45_RJ11

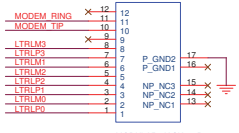

12G142101100

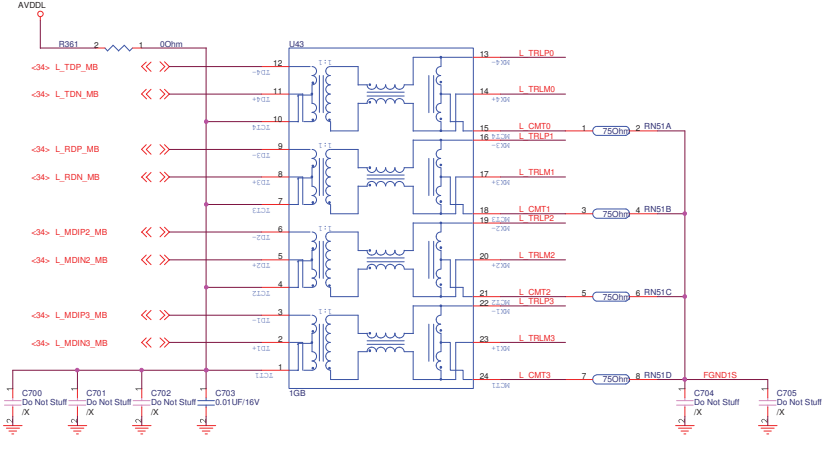

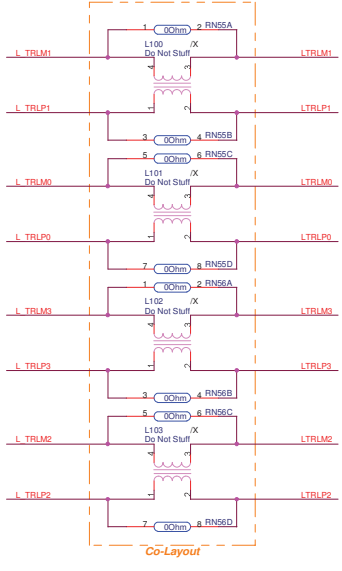

1.1

ASUSTeK COMPUTER INC.	Title : RJ45&RJ11		
	Engineer: Alan Chen		
Size: Custom	Project Name: Z96S		Rev: 2.0
Date: 星期三, 五月 30, 2007	Sheet 35 of 67		

http://hobi-elektronika.net

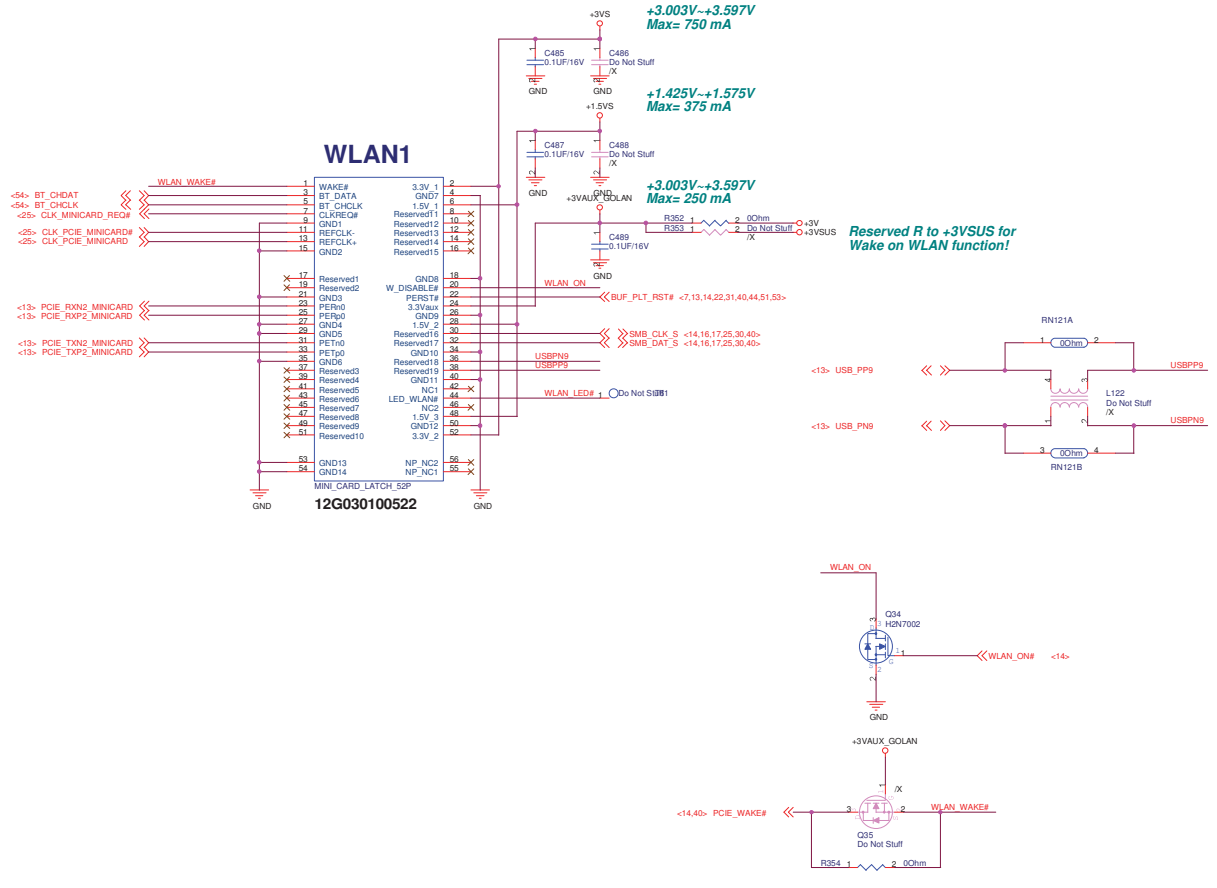

1.1

ASUSTeK COMPUTER INC.

Title : MINICARD

Engineer: Alan Chen

Size	Project Name	Rev
Custom	Z96S	2.0

Date: 星期三, 六月 30, 2007 Sheet 36 of 67

http://hobi-elektronika.net

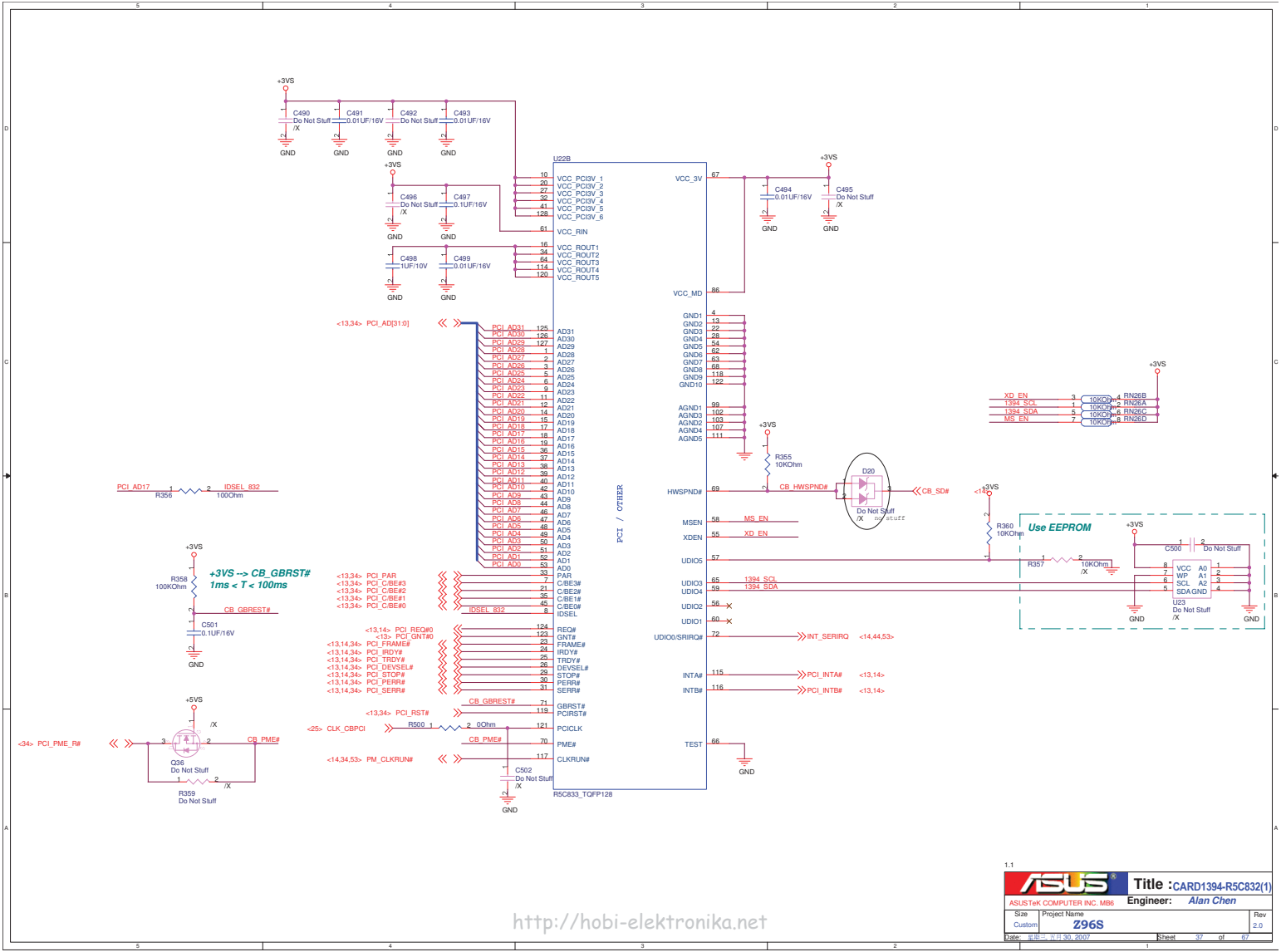

http://hobi-elektronika.net

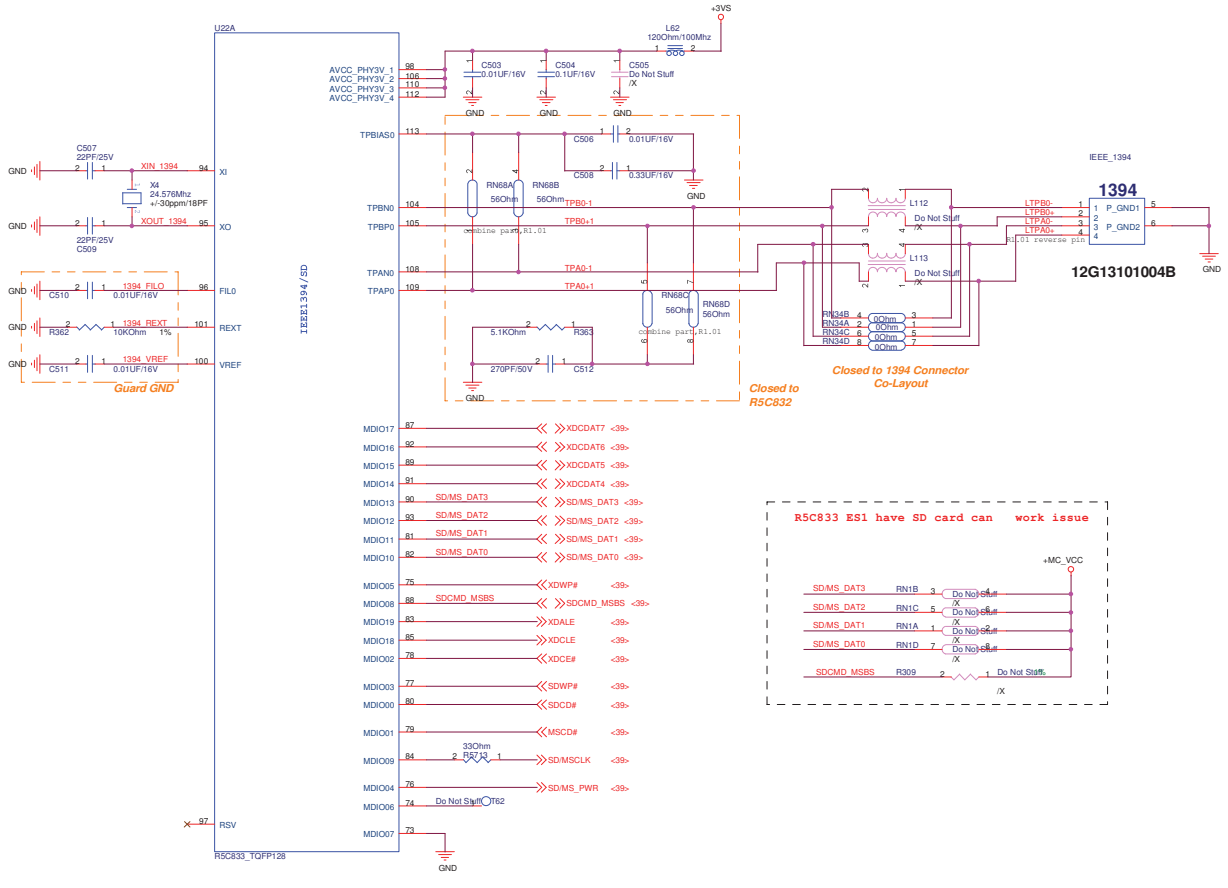

1.1

Title : CARD1394-R5C832(2)

ASUSTeK COMPUTER INC. MB6

Engineer: Alan Chen

Size	Project Name	Rev
Custom	Z96S	2.0

Date: 星期三, 五月 30, 2007 Sheet 38 of 67

http://hobi-elektronika.net

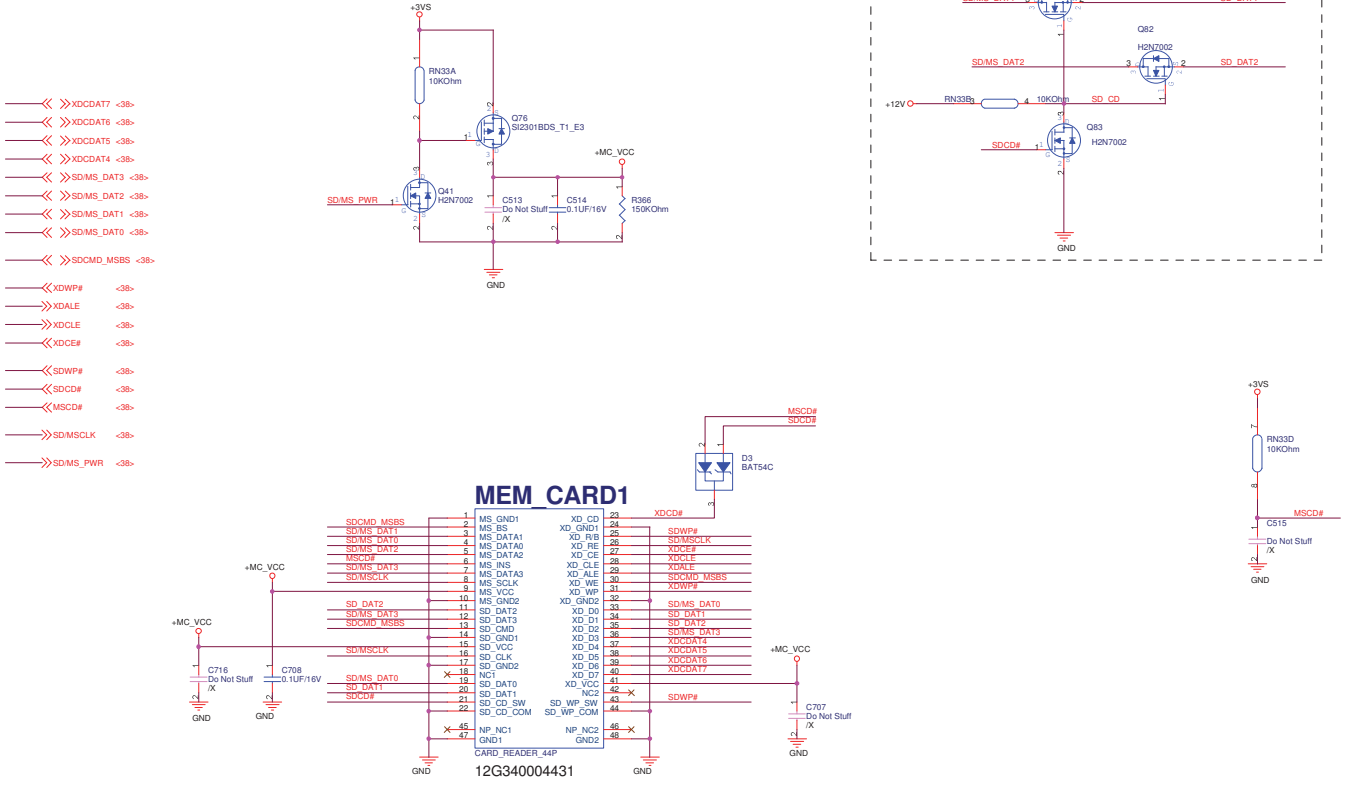

1.1

ASUS	Title : 4 in 1 CARD READER	
ASUSTeK COMPUTER INC	Engineer: Alan Chen	
Size: Custom	Project Name: Z96S	Rev: 2.0
Date: 星期一, 三月 30, 2007	Sheet 39 of 67	

http://hobi-elektronika.net

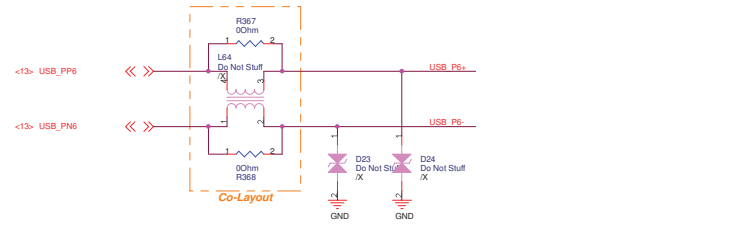

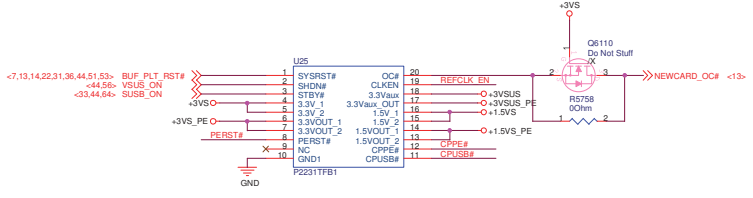

change part to Lead free

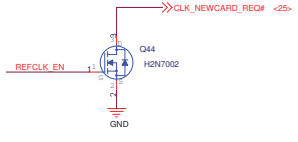

NewCard Header

EXPRESS1

!! ExpressCard Standard 1.0:
Change Pin7 from RESERVED to SMBCLK
Change Pin8 from SMBCLK to SMBDATA
Change Pin9 from SMBDATA to +1.5V

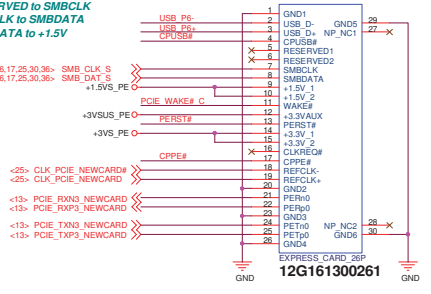

NewCard Ejecter

EJECTOR1

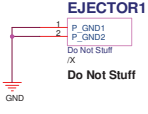

Do Not Stuff

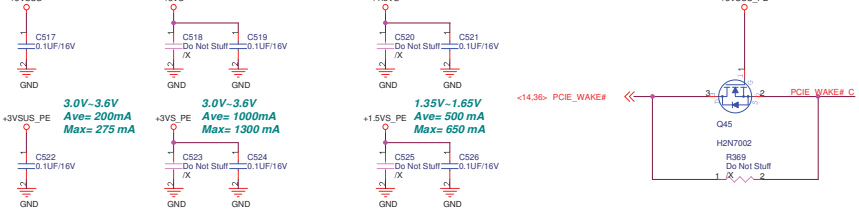

1.1

ASUS	Title : NEWCARD	
ASUSTeK COMPUTER INC. NB1	Engineer: Alan Chen	
Size: Custom	Project Name: Z96S	Rev: 2.0
Date: 星期三, 五月 30, 2007	Sheet 40 of 67	

http://hobi-elektronika.net

PORT BAR III

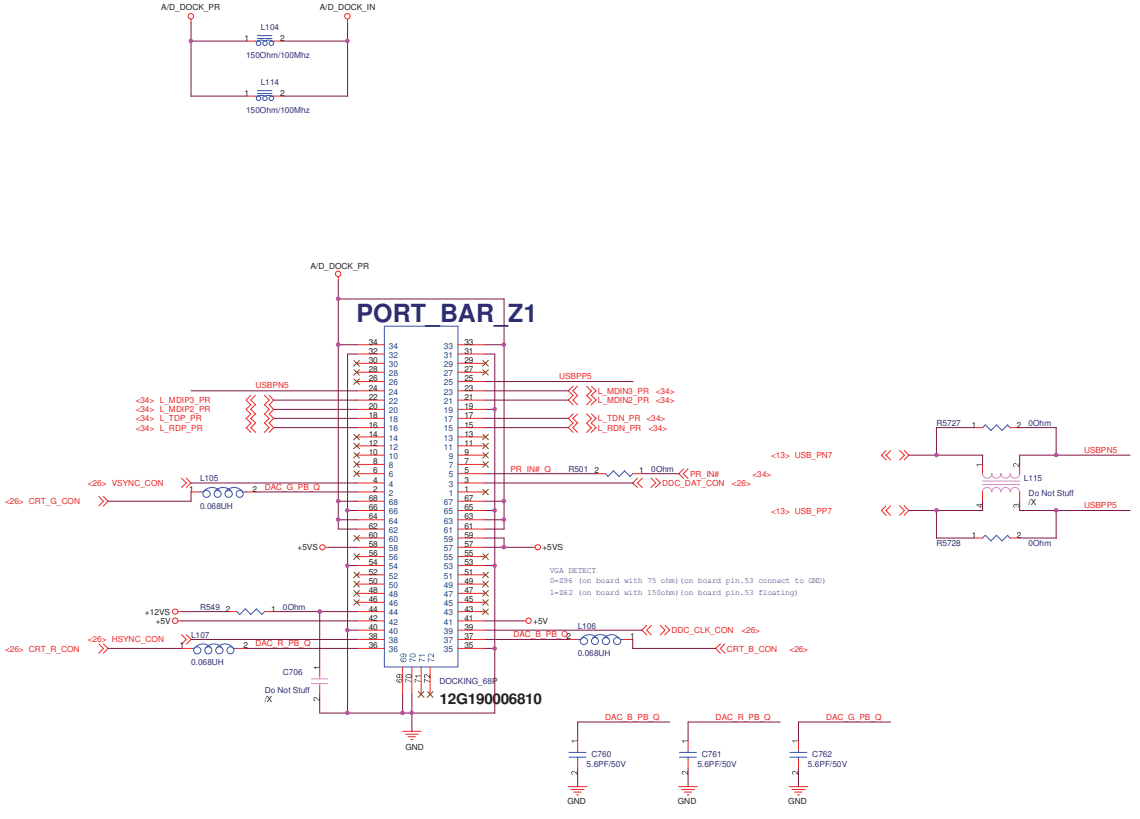

1.1

ASUS	Title : <Title>	
ASUSTeK COMPUTER INC	Engineer: Alan Chen	
Size: Custom	Project Name: Z96S	Rev: 2.0
Date: 星期一, 三月 30, 2007	Sheet 41 of 67	

http://hobi-elektronika.net

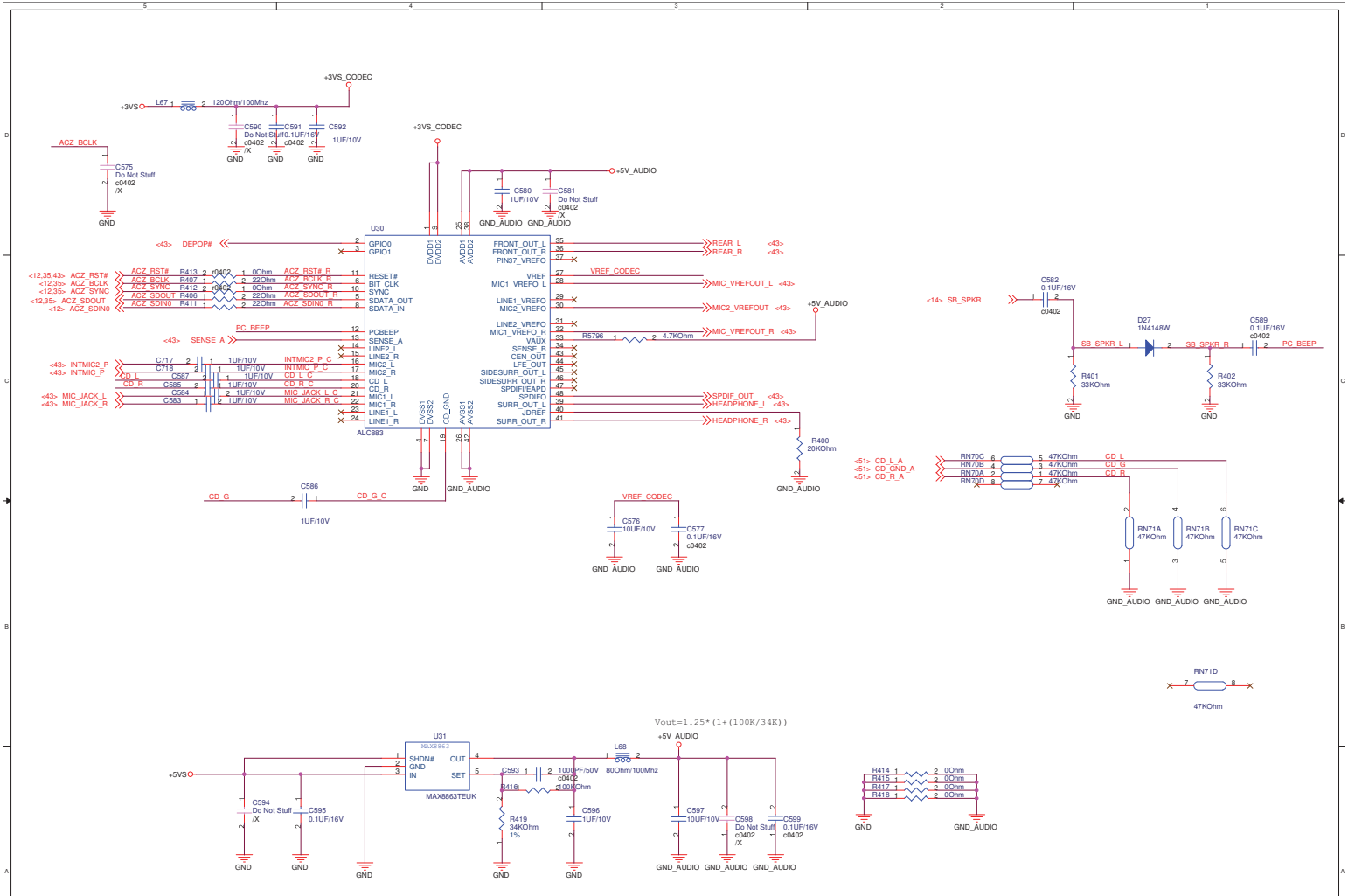

1.1

ASUSTeK COMPUTER INC. NB1

Title : CODEC-ALC660

Engineer: Alan Chen

Size	Project Name	Rev
Custom	Z96S	2.0

Date: 星期三, 六月 30, 2007 Sheet 42 of 67

http://hobi-elektronika.net

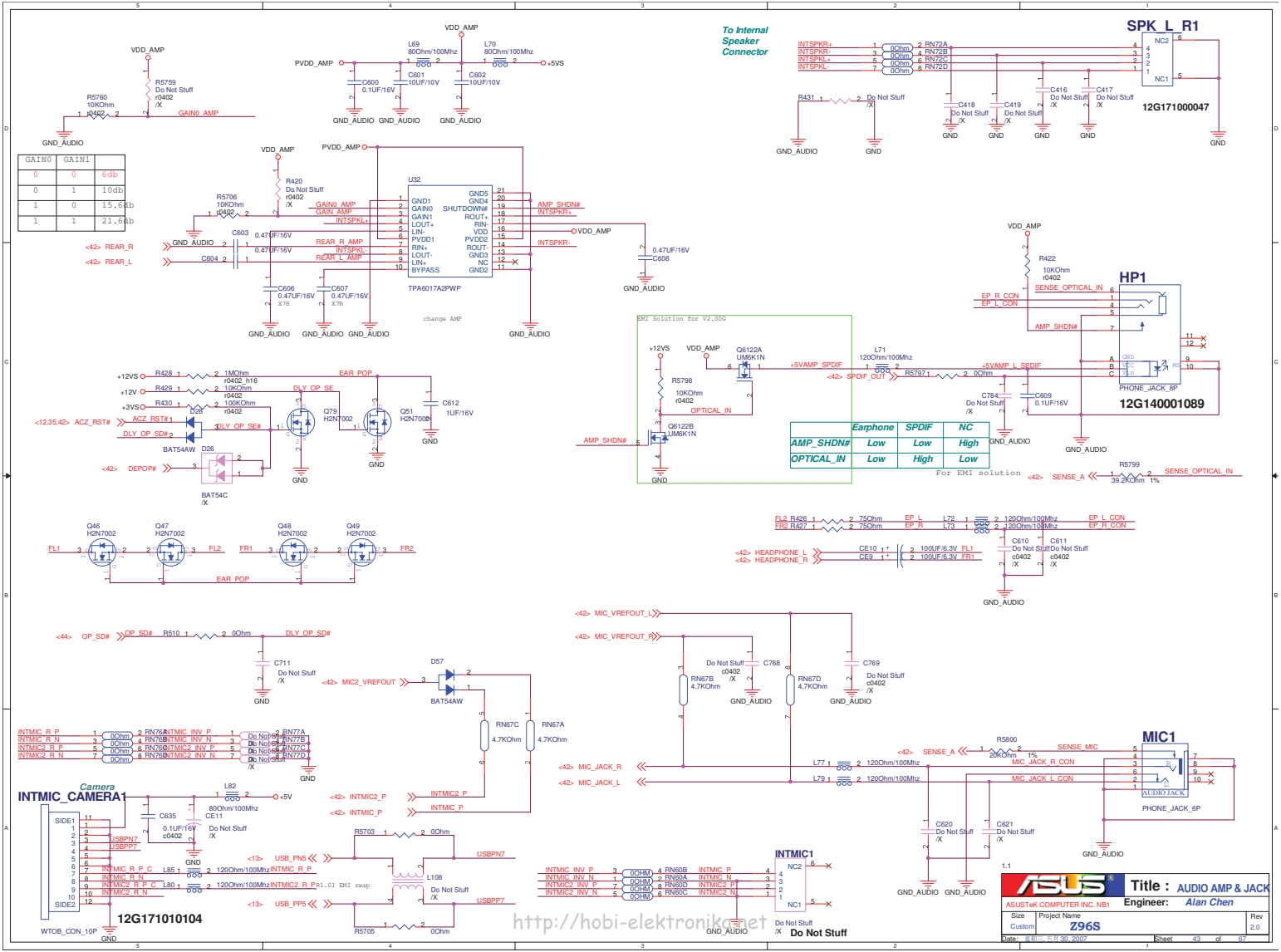

GAIN0	GAIN1	
0	0	6db
0	1	10db
1	0	15.6db
1	1	21.6db

	Earphone	SPDIF	NC
AMP_SHDN#	Low	Low	High
OPTICAL_IN	Low	High	Low

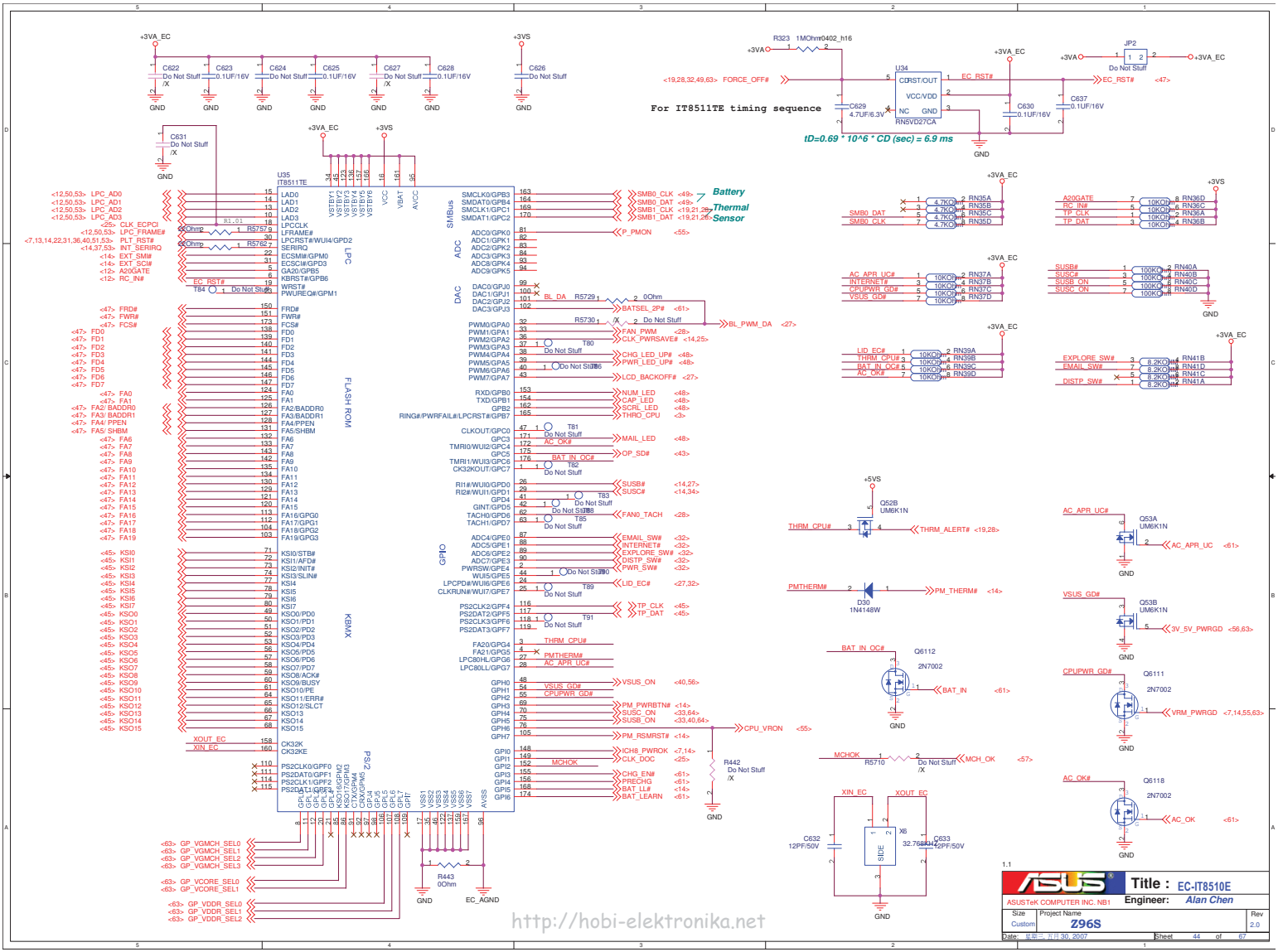

http://hobi-elektronika.net

For Touch-Pad

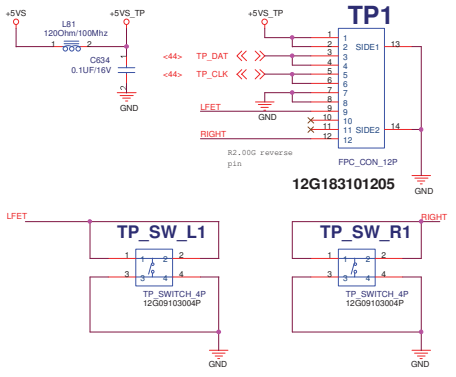

For Keyboard

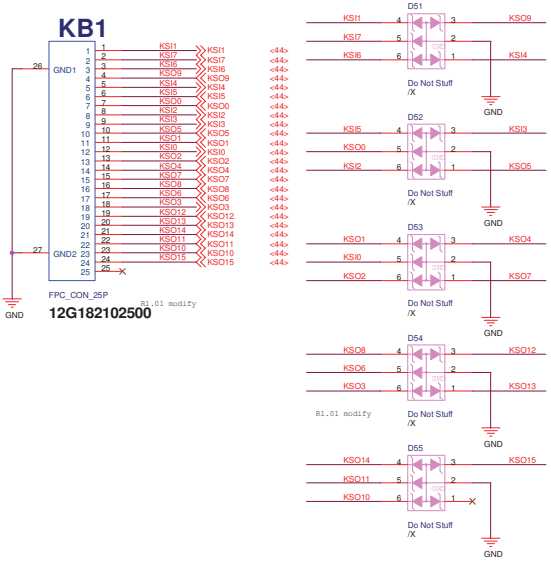

http://hobi-elektronika.net

1.1

ASUS	Title : Touch Pad & KB	
ASUSTeK COMPUTER INC. MB6	Engineer: Alan Chen	
Size: Custom	Project Name: Z96S	Rev: 2.0
Date: 星期三, 五月 30, 2007	Sheet 45 of 67	

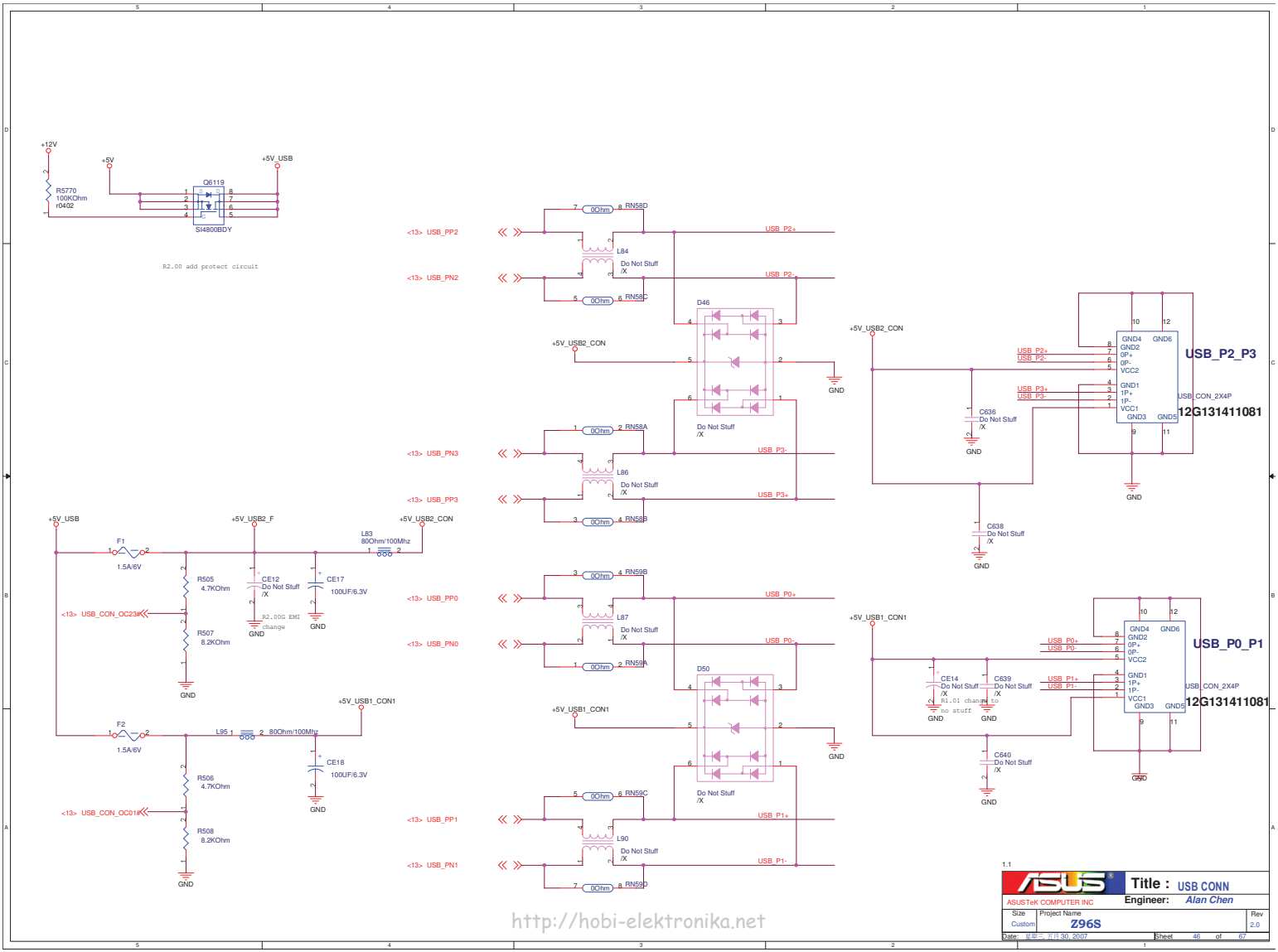

http://hobi-elektronika.net

ISA ROM

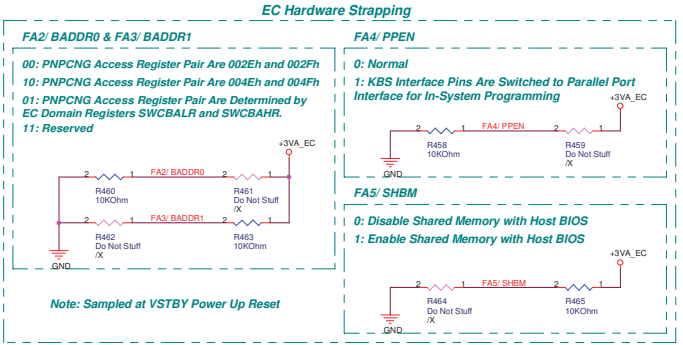

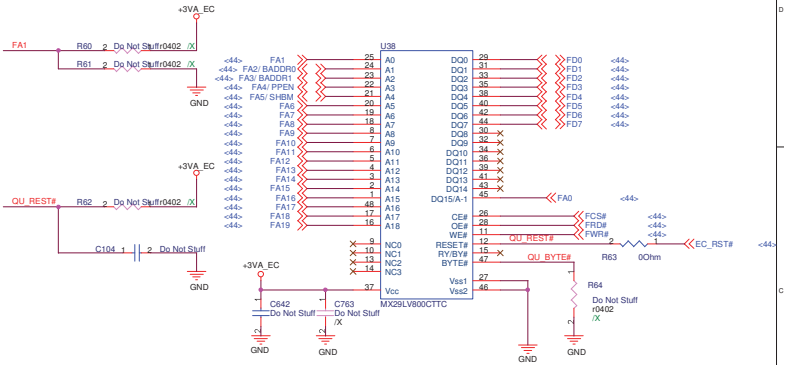

BIOS:05G001204043

http://hobi-elektronika.net

1.1

ASUS	Title : ISA ROM	
ASUSTeK COMPUTER INC. NB1	Engineer: Alan Chen	
Size: Custom	Project Name: Z96S	Rev: 2.0
Date: 星期三, 五月 30, 2007	Sheet 47 of 67	

For LED

For SATA/IDE LED

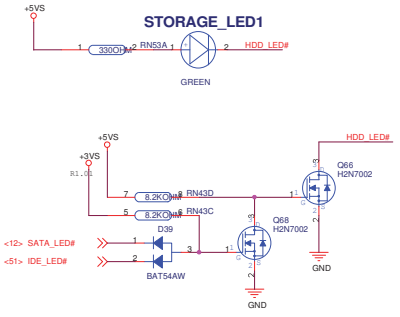

for Cap. Lock

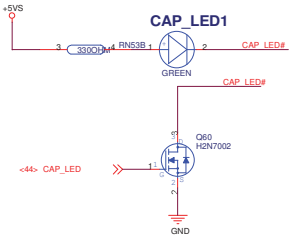

for Num Lock

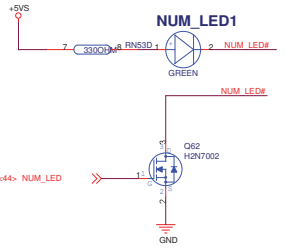

for Scroll Lock

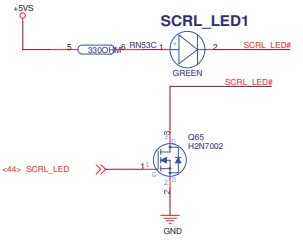

For WireLess LED

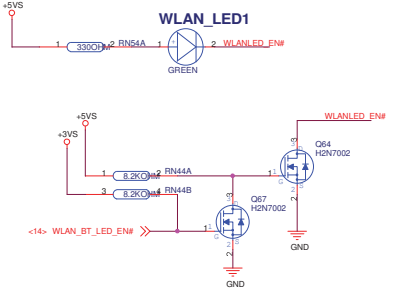

for email

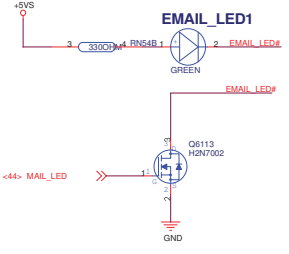

For BATTERY LED

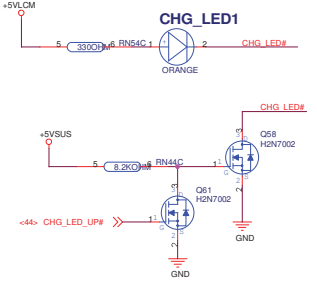

For POWER LED

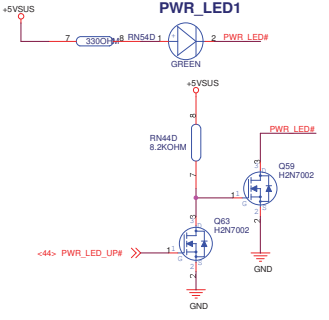

http://hobi-elektronika.net

1.1

ASUS	Title : LED		
ASUSTeK COMPUTER INC	Engineer: Alan Chen		
Size: Custom	Project Name: Z96S		Rev: 2.0
Date: 星期三, 五月 30, 2007	Sheet 48 of 67		

DC IN

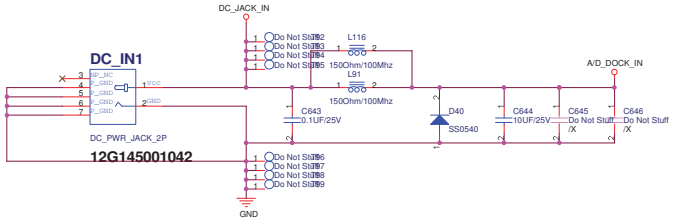

BAT IN

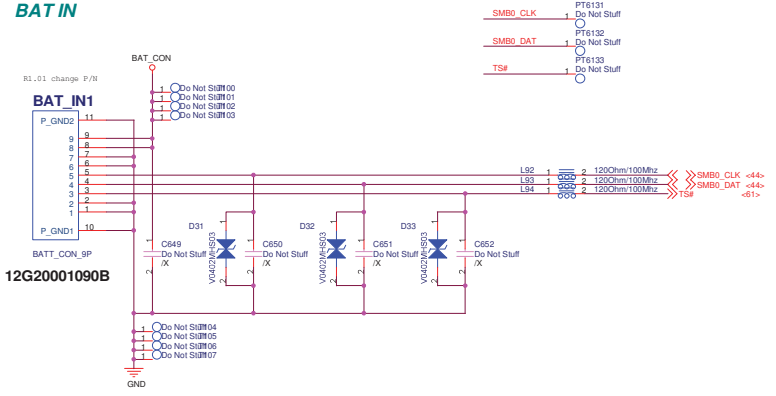

Without Battery & Pull out Adapter

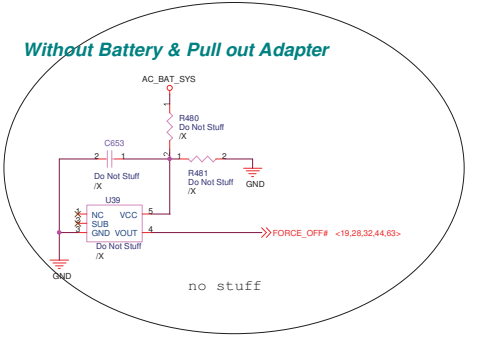

http://hobi-elektronika.net

1.1

ASUS	Title : DC & BAT IN	
ASUSTeK COMPUTER INC. NB1	Engineer: Alan Chen	
Size: Custom	Project Name: Z96S	Rev: 2.0
Date: 星期三, 六月 30, 2007	Sheet 49 of 67	

For Debug

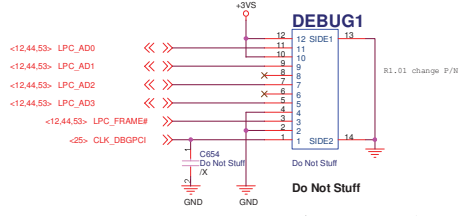

pin swap;by F3J

http://hobi-elektronika.net

1.1

ASUSTeK COMPUTER INC	Title : Debug CONN.	
	Engineer: Alan Chen	
Size: Custom	Project Name: Z96S	Rev: 2.0
Date: 星期三, 六月 30, 2007	Sheet 50 of 67	

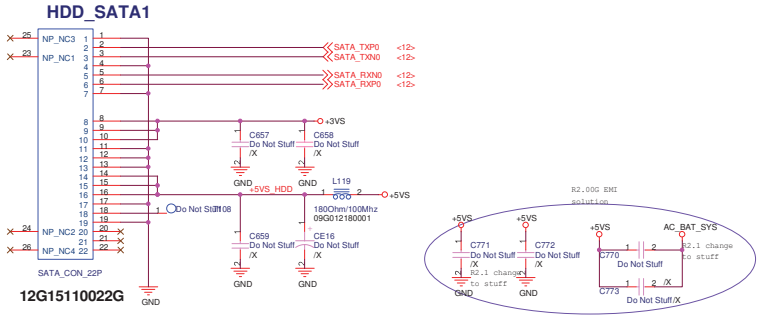

SATA HDD

ODD

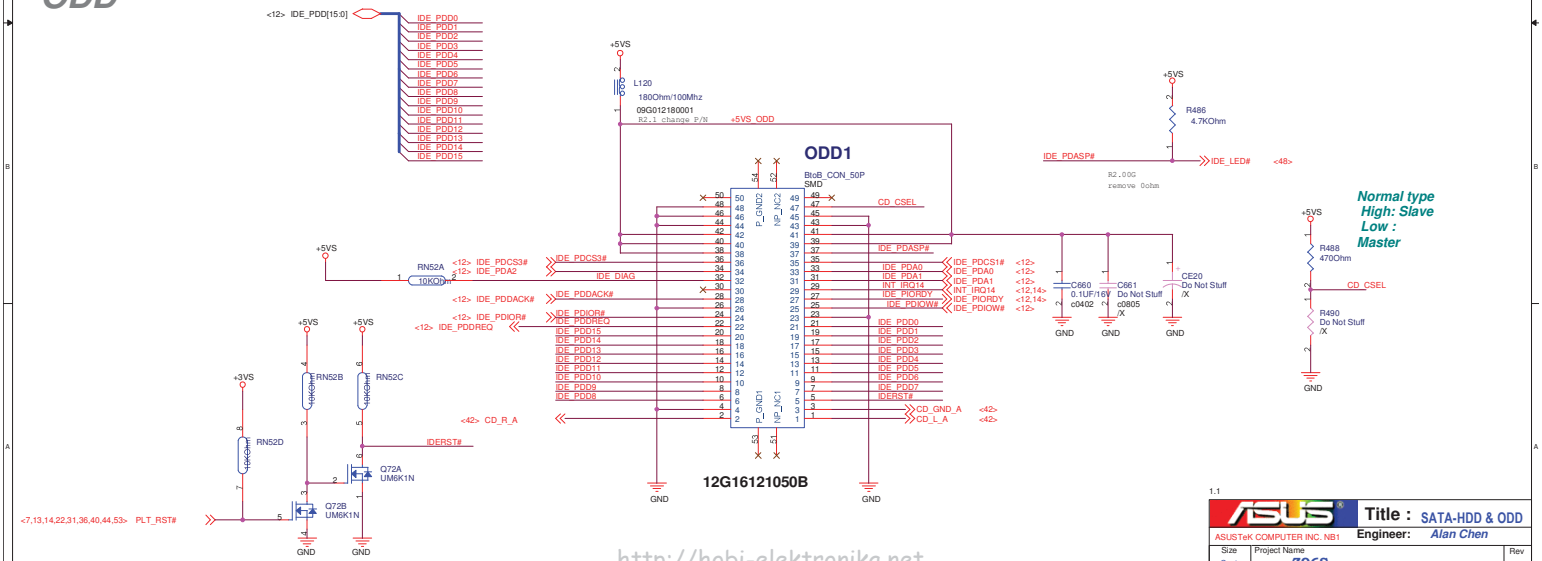

http://hobi-elektronika.net

1.1

ASUS	Title : SATA-HDD & ODD	
ASUSTeK COMPUTER INC. NB1	Engineer: Alan Chen	
Size: Custom	Project Name: Z96S	Rev: 2.0
Date: 星期三, 六月 30, 2007	Sheet 51 of 67	

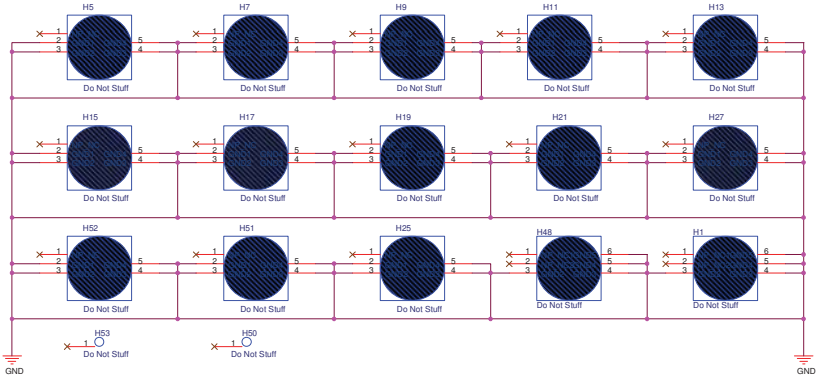

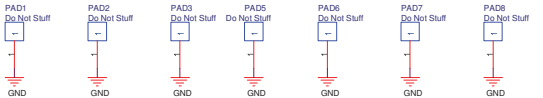

FOR SCREW HOLE

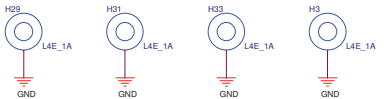

FOR SCREW HOLE

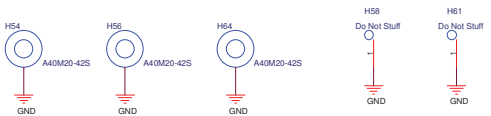

http://hobi-elektronika.net

1.1

ASUSTeK COMPUTER INC

Title : SREW HOLE

Engineer: Alan Chen

Size	Project Name	Rev
Custom	Z96S	2.0

Date: 星期三, 六月 30, 2007 Sheet 52 of 67

For TPM Module

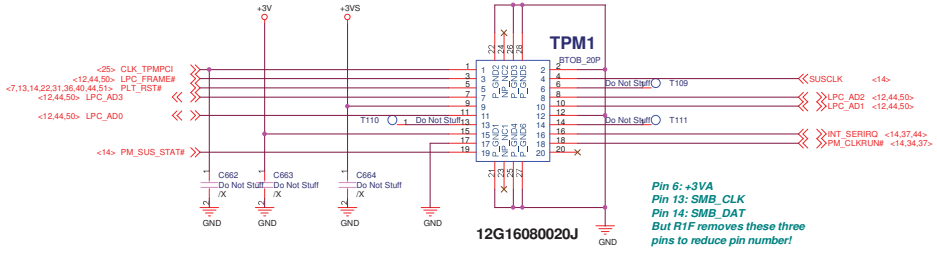

Pin 6: +3VA
Pin 13: SMB_CLK
Pin 14: SMB_DAT
But R1F removes these three pins to reduce pin number!

1.1

ASUSTeK COMPUTER INC	Title : TPM	
	Engineer: Alan Chen	
Size: Custom	Project Name: Z96S	Rev: 2.0
Date: 星期三, 六月 30, 2007	Sheet 53 of 67	

http://hobi-elektronika.net

For Bluetooth

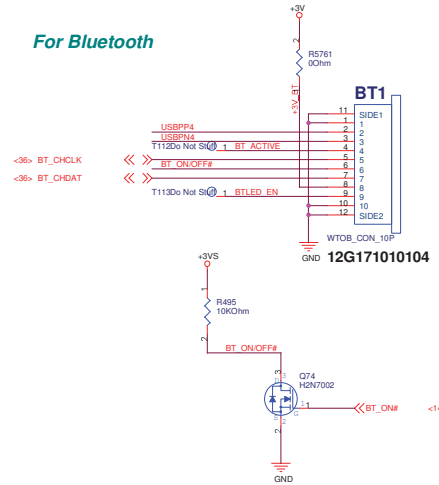

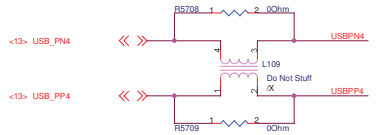

http://hobi-elektronika.net

1.1

ASUSTeK COMPUTER INC

Title : Blue Tooth

Engineer: Alan Chen

Size	Project Name	Rev
Custom	Z96S	2.0

Date: 星期三, 六月 30, 2007 Sheet 54 of 67

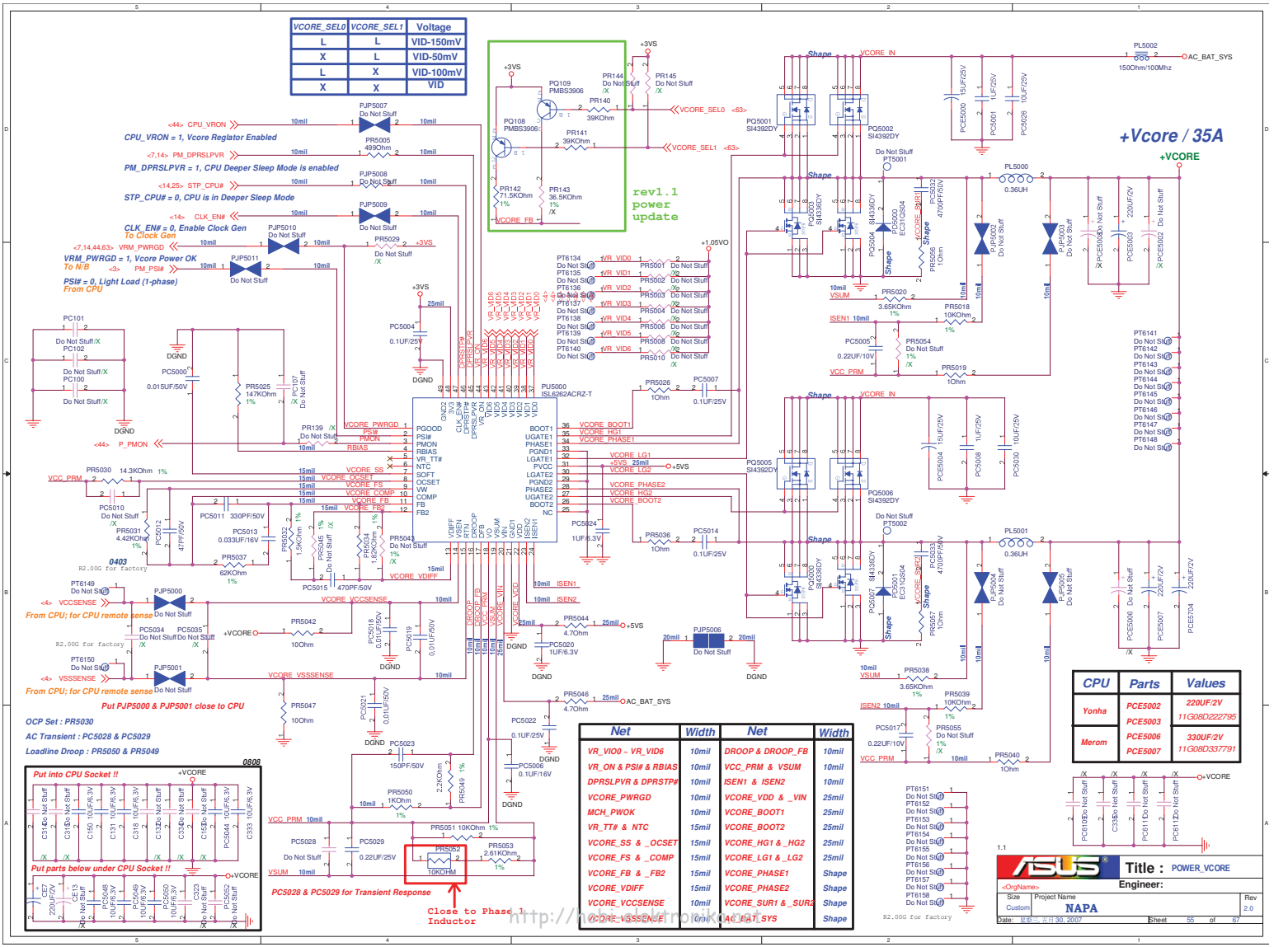

http://nokiaelektronik.net

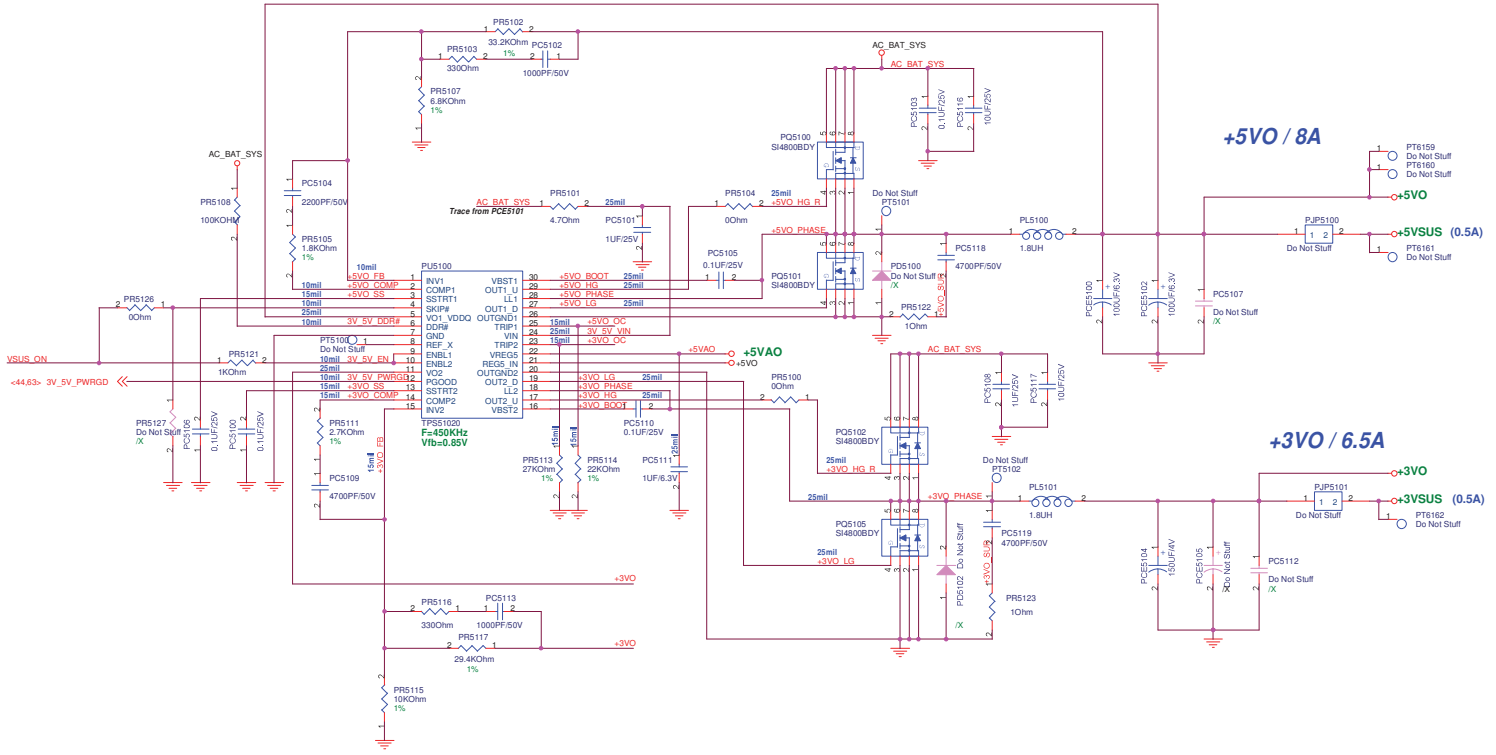

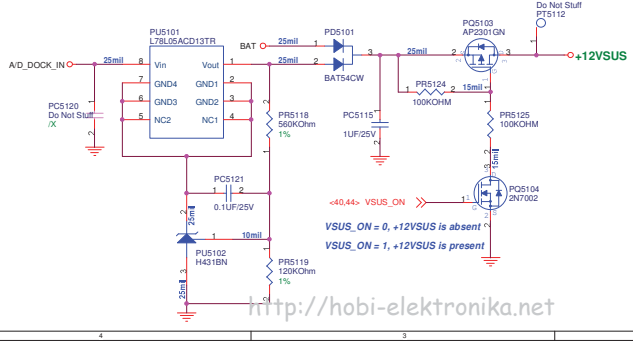

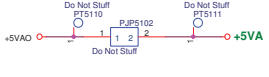

Net	Width	Net	Width
3V_5V_DDR#	10mil	AC_BAT_SYS	Shape
3V_5V_EN	10mil	+5VAO	25mil
3V_5V_PWRGD	10mil	+3VO_FB	10mil
3V_5V_VIN	25mil	+3VO_COMP	10mil
+5VO_FB	10mil	+3VO_SS	15mil
+5VO_COMP	10mil	+3VO_BOOT	25mil
+5VO_SS	15mil	+3VO_HG	25mil
+5VO_BOOT	25mil	+3VO_HG_R	25mil
+5VO_HG	25mil	+3VO_LG	25mil
+5VO_HG_R	25mil	+3VO_PHASE	Shape
+5VO_LG	25mil	+3VO_SUR	Shape
+5VO_PHASE	Shape	+3VO_OC	15mil
+5VO_SUR	Shape	+12VSUS_ADJ	10mil
+5VO_OC	15mil	+5VDRV	25mil

1.1

ASUS Title : POWER_SYSTEM

<OrgName> Engineer:

Size	Project Name	Rev
Custom	NAPA	2.0

Date: 星期三, 六月 30, 2007 Sheet 56 of 67

http://hobi-elektronika.net

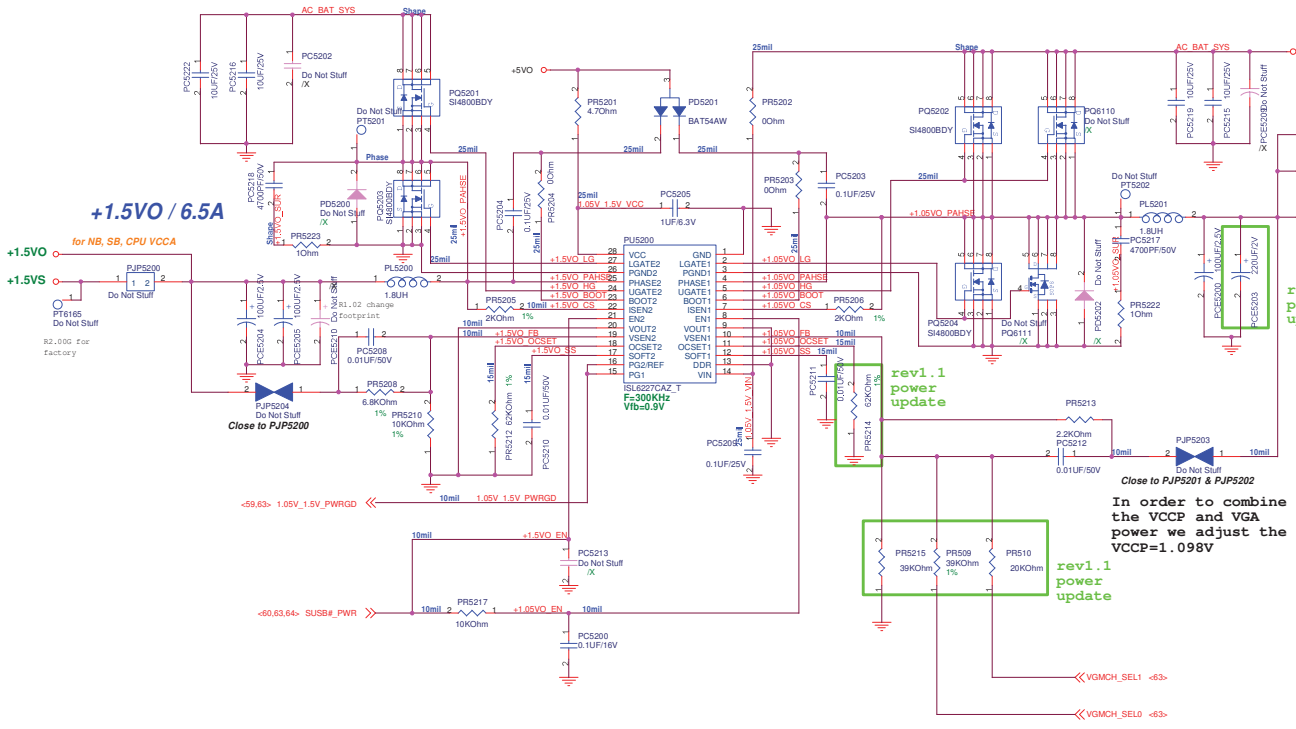

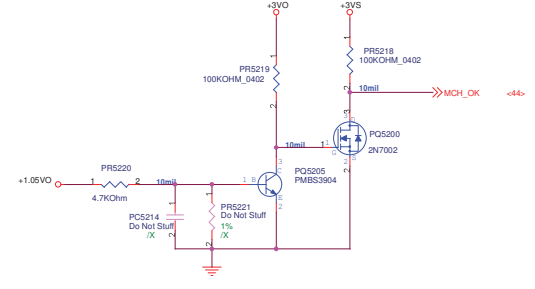

Net	Width	Net	Width
1.15V_1.5V_VCC	25mil	+1.5VO_SS	15mil
1.15V_1.5V_PWRGD	10mil	AC_BAT_SYS	Shape
1.15V_1.5V_VIN	25mil	+1.15VO_EN	10mil
+1.5VO_EN	10mil	+1.15VO_LG	25mil
+1.5VO_LG	25mil	+1.15VO_HG	25mil
+1.5VO_HG	25mil	+1.15VO_PHASE	Shape
+1.5VO_PHASE	Shape	+1.15VO_BOOT	25mil
+1.5VO_BOOT	25mil	+1.15VO_MODSEL	10mil
+1.5VO_MODSEL	10mil	+1.15VO_CS	10mil
+1.5VO_CS	10mil	+1.15VO_FB	10mil
+1.5VO_FB	10mil	+1.15VO_OCSET	25mil
+1.5VO_OCSET	15mil	+1.15VO_SS	15mil
+1.5VO_SUR	Shape	+1.15VO_SUR	Shape

+1.05VO/+VCCP

VGMCH_SEL0	VGMCH_SEL1	Voltage
L	L	1.089V
X	L	1.039V
L	X	0.99V
X	X	0.94V

1.1

ASUS

Title : POWER_I/O_1.5VS & 1.05VS

<OrgName>

Engineer:

Size	Project Name	Rev
Custom	NAPA	2.0

Date: 星期三, 六月 30, 2007 Sheet 57 of 67

http://nobi-elektronika.net

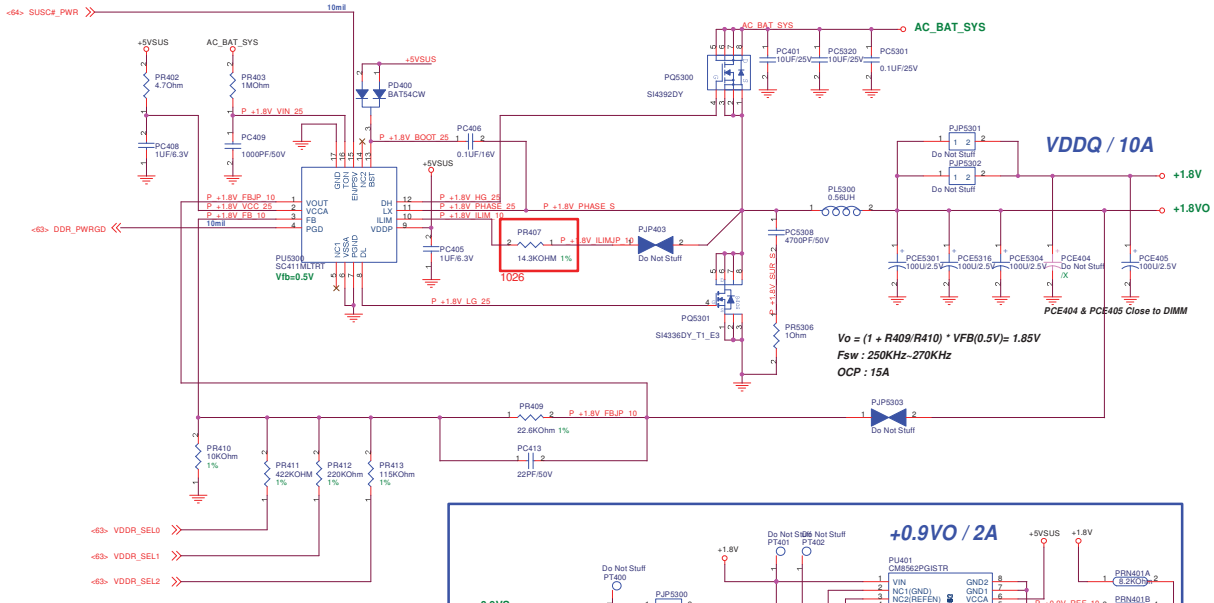

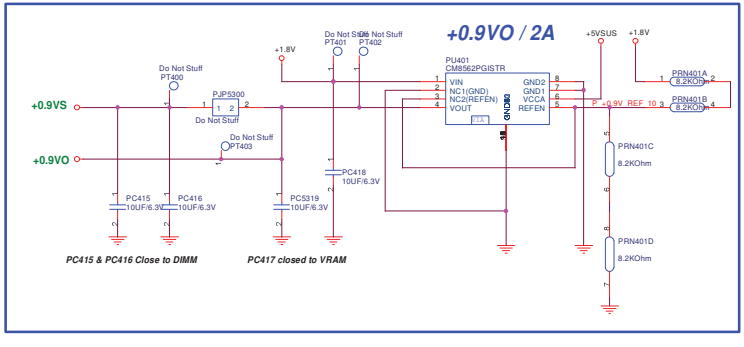

+VDDQ

VDDR_SEL2	VDDR_SEL1	VDDR_SEL0	Voltage
X	X	X	1.654V
X	X	L	1.682V
X	L	X	1.707V
X	L	L	1.734V
L	X	X	1.753V
L	X	L	1.781V
L	L	X	1.806V
L	L	L	1.834V

1.1

Title : POWER_I/O_DDR & VTT

<OrgName>

Engineer:

Size	Project Name	Rev
Custom	NAPA	2.0

Date: 星期三, 九月 30, 2007 Sheet 58 of 67

http://hobi-elektronika.net

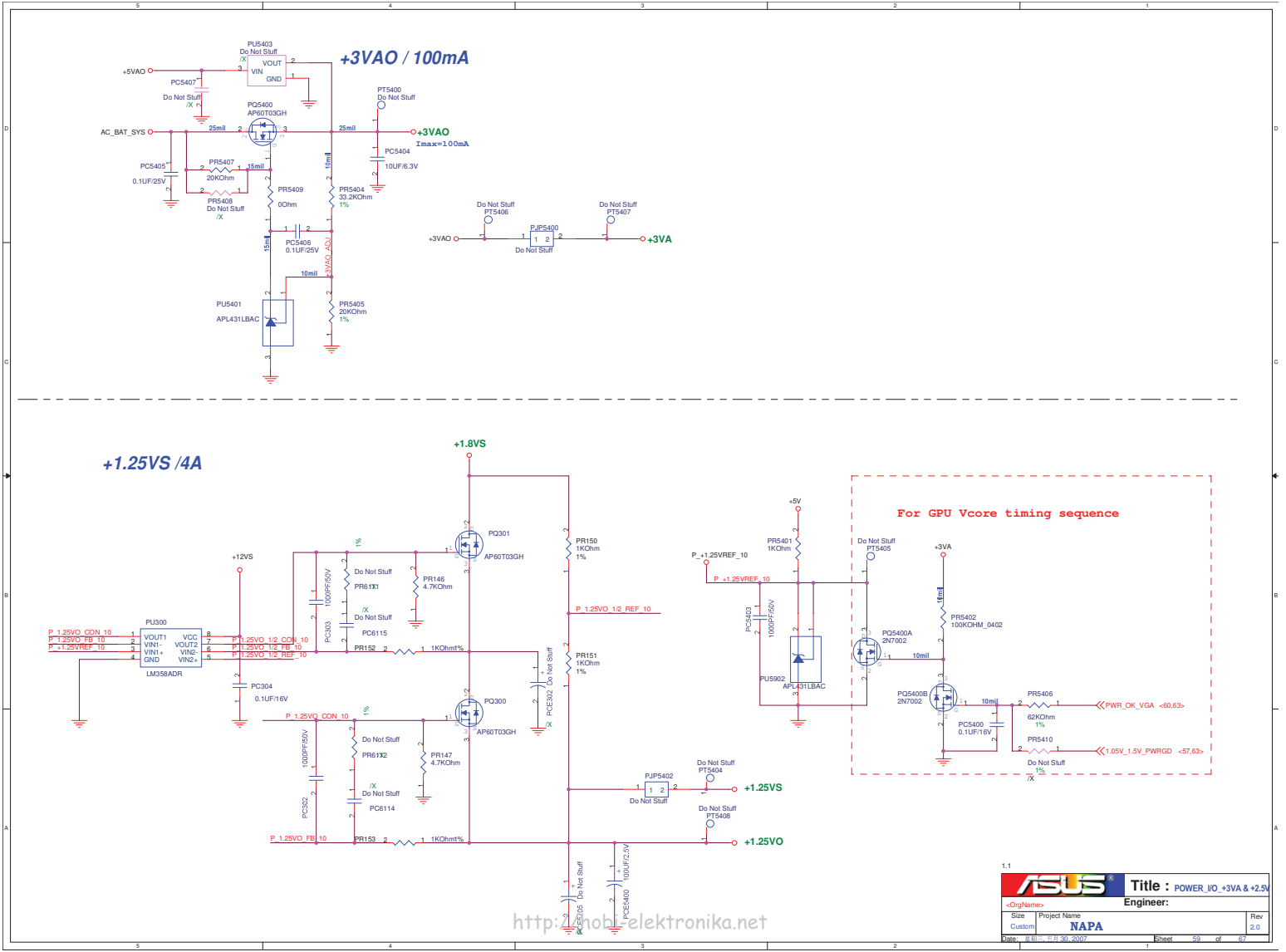
+3VAO / 100mA
PU5403
Do Not Stuff
/X
VOUT
VIN
GND
+5VAO
PC5407
Do Not Stuff
/X
PQ5400
AP60T03GH
AC_BAT_SYS
25mil
PT5400
Do Not Stuff
+3VAO
Imax=100mA
PC5404
10UF/6.3V
PC5405
0.1UF/25V
PR5407
20KOhm
15mil
PR5408
Do Not Stuff
/X
PR5409
0Ohm
PR5404
33.2KOhm
1%
10mil
PC5406
0.1UF/25V
+3VAO_ADJ
PU5401
APL431LBAC
PR5405
20KOhm
1%
Do Not Stuff
PT5406
PJP5400
Do Not Stuff
PT5407
+3VA
+1.25VS /4A
+1.8VS
+12VS
PU300
LM358ADR
P_1.25VO_CON_10
P_1.25VO_FB_10
P_+1.25VREF_10
VOUT1
VIN1-
VIN1+
GND
VCC
VOUT2
VIN2-
VIN2+
P_1.25VO_1/2_CON_10
P_1.25VO_1/2_FB_10
P_1.25VO_1/2_REF_10
PC304
0.1UF/16V
PC303
1000PF/50V
PR6111
PC6115
PR152
1KOhm1%
PQ301
AP60T03GH
PR146
4.7KOhm
PR150
1KOhm
1%
PR151
1KOhm
1%
PCE302
PQ300
AP60T03GH
PR6112
PR147
4.7KOhm
PC6114
PC302
PR153
1KOhm1%
PJP5402
Do Not Stuff
PT5404
+1.25VS
PT5408
+1.25VO
PCE301
PCE400
100UF/2.5V
+5V
PR5401
1KOhm
PC5403
1000PF/50V
PU5902
APL431LBAC
PQ5400A
2N7002
PQ5400B
2N7002
PR5402
100KOHM_0402
16mil
PC5400
0.1UF/16V
PR5406
62KOhm
1%
PWR_OK_VGA <60,63>
PR5410
1.05V_1.5V_PWRGD <57,63>
For GPU Vcore timing sequence
Do Not Stuff
PT5405
Title : POWER_I/O_+3VA & +2.5V
Engineer:
Size
Custom
Project Name
NAPA
Rev
2.0
Sheet 59 of 67
http://mobil-elektronika.net

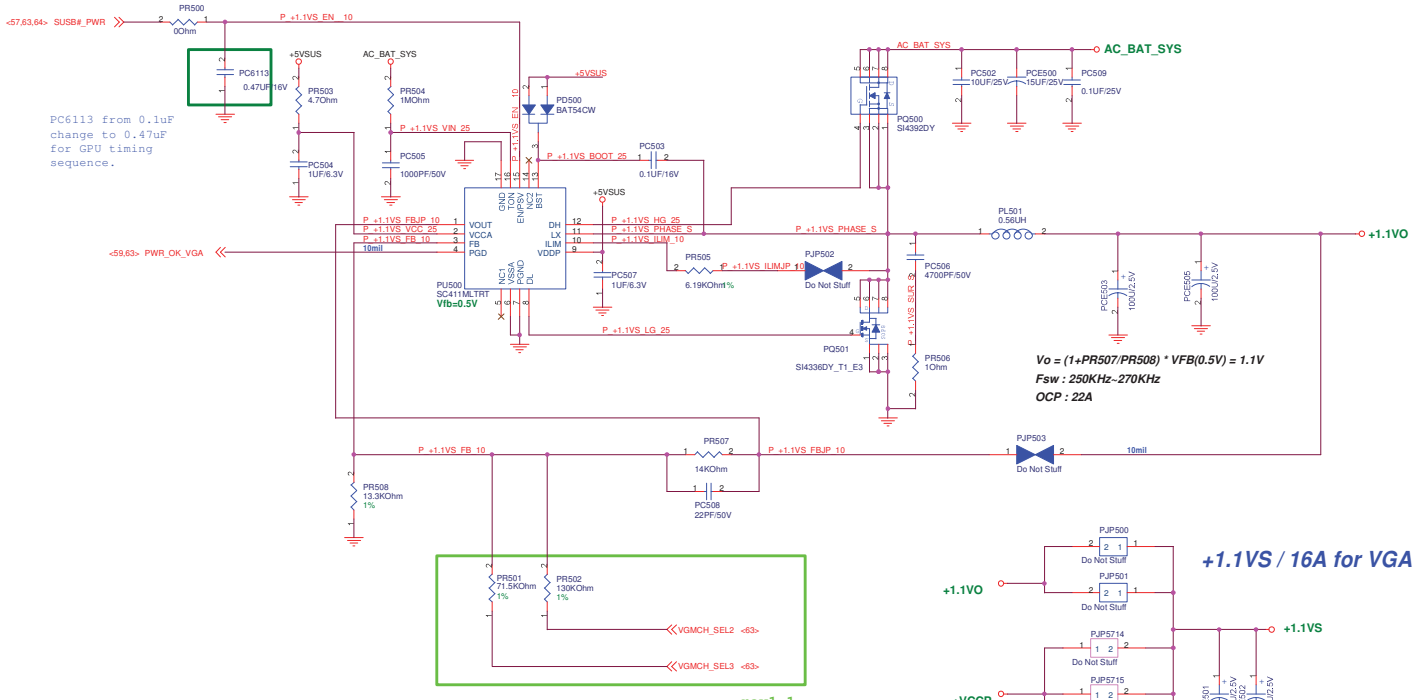

+1.05VS

VGMCH_SEL2	VGMCH_SEL3	Voltage
L	L	1.209V
X	L	1.154V
L	X	1.109V
X	X	1.054V

1.1

Title <Title>

Size Custom | Document Number <Doc> | Rev 2.0

Date: 星期三, 五月 30, 2007 | Sheet 60 of 67

http://hobi-elektronika.net

POWER PATH & BAT_LEARN

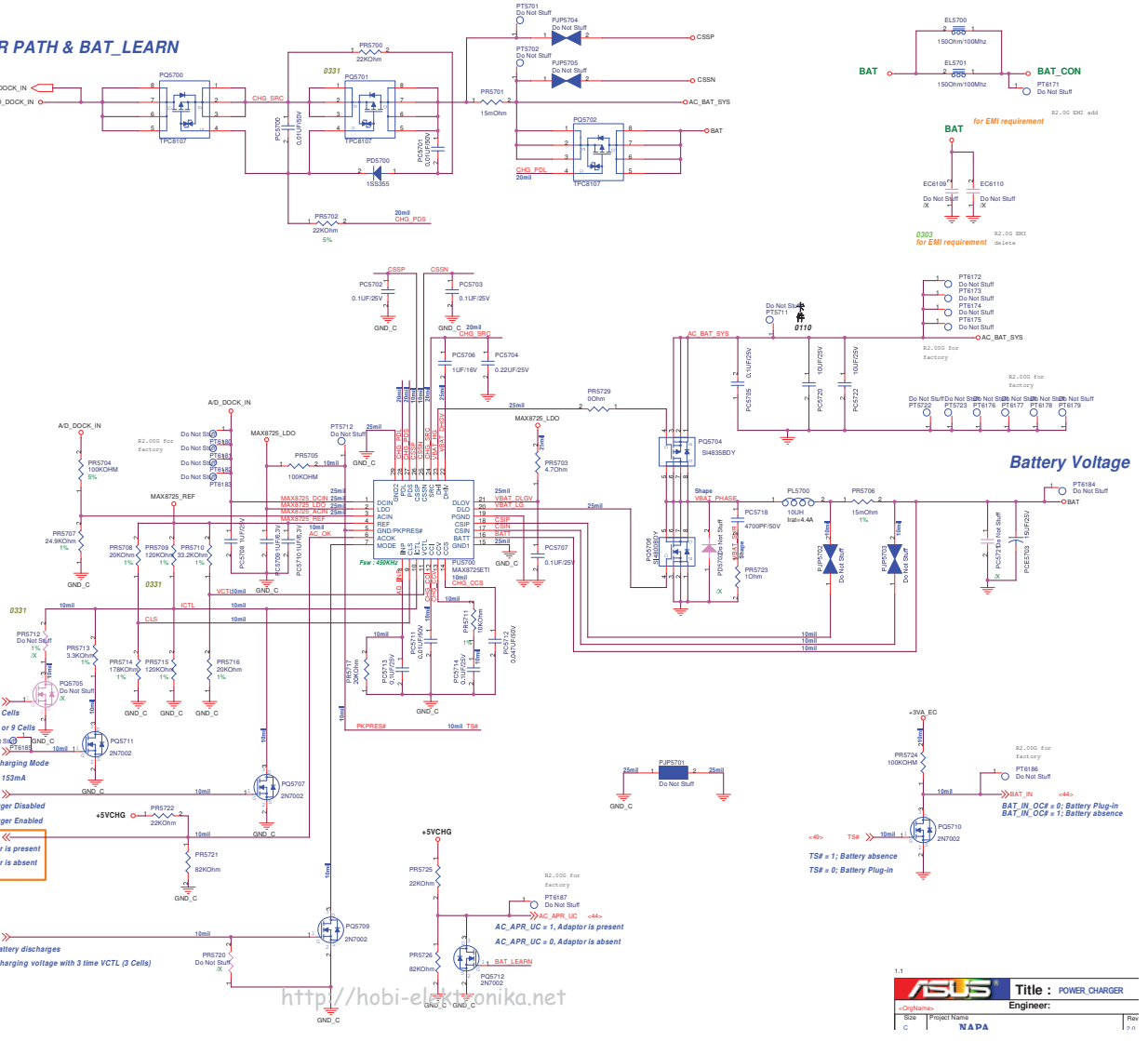

Charger shut down condition :

1. Vctl < 0.06V
2. PKPRES# > 55% of MAX8725_LDO
3. AC Adaptor Removed

The timing of PDL & PDS switch :

BAT - A/D_DOCK_IN > 100mV-> Battery mode

The current capacity of MAX8725_LDO is 10mA.

VBAT_DLGV is a voltage for driving MOSFET.

MAX8725_ACIN < 10.27V, AC Adaptor absent
MAX8725_ACIN > 10.27V, AC Adaptor absent

MODE (Pin7)	Battery
High (>2.8V)	4-Cell
Low (<0.8V)	3-Cell
High Impedance (1.6V<Vmoce<2V)	Battery Learn

MAX8725_REF : 4.2235V
MAX8725_LDO : 5.4V

Battery Charging Voltage :
+V_BAT= 3 x [4.2235+(Vvctl-1.8)/9.52]

Battery Charging Current :
Icharge=(0.075/PR5706) x (Victl/3.6))

Input Adaptor Max. Current Limit :
Ilimit_current=(0.075/PR5701) x (Vcls/4.2235)

Pre-Charging Mode :

Precharging current = 150 ~ 160mA
Victl = 0.100V ~ 0.120V

Battery Cell Selection :

BATSEL_2P# = 1, 6 Cells; Victl = 2.084V
=> Icharge = 2.894A
BATSEL_2P# = 0, 9 Cells; Victl = 3.219V
=> Icharge = 4.472A

Adaptor Max. Current :

PR5714 = 178K; Vcls = 3.79V, Ilimit = 4.5A; 90W
PR5714 = 47K; Vcls = 2.96V, Ilimit = 3.5A; 65W

BATSEL_SP# = 1, 3-Cell

Victl = 1.22V / Icharge = 1.69A

BATSEL_SP# = 0, 6-Cell or 9-Cell

Victl = 2.11V / Icharge = 2.93A

Battery Voltage

BATSEL_2P# = 1, 3 Cells
BATSEL_2P# = 0, 6 or 9 Cells

PRECHG = 1, Pre-Charging Mode
Charging Current = 153mA

CHG_EN# = 1, Charger Disabled
CHG_EN# = 0, Charger Enabled

AC_OK = 1, Adaptor is present
AC_OK = 0, Adaptor is absent

BAT_LEARN = 1, Battery discharges
BAT_LEARN = 0, charging voltage with 3 time VCTL (3 Cells)

AC_APR_UC = 1, Adaptor is present
AC_APR_UC = 0, Adaptor is absent

BAT_IN_OC# = 0; Battery Plug-in
BAT_IN_OC# = 1; Battery absence

TS# = 1; Battery absence
TS# = 0; Battery Plug-in

http://hobi-elektronika.net

ASUS	Title : POWER_CHARGER	
<OrigName>	Engineer:	
Size C	Project Name NAPA	Rev 2.0

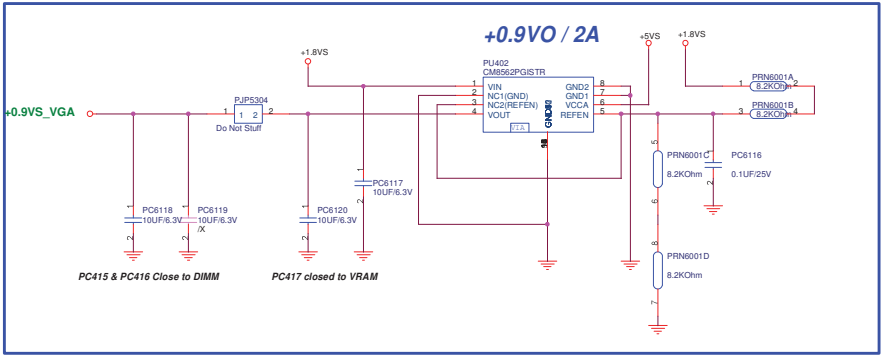

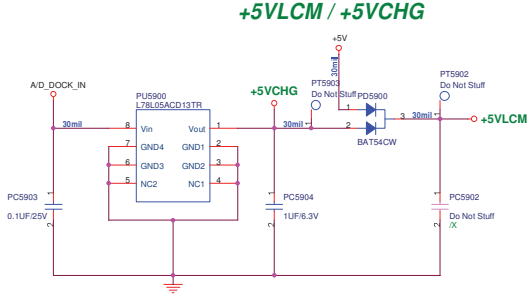

http://hobi-elektronika.net

1.1

Title : POWER_DETECT

<OrgName>

Engineer:

Size	Project Name	Rev
Custom	NAPA	2.0

Date: 星期三, 六月 30, 2007 Sheet 62 of 67

Power Good Detecter

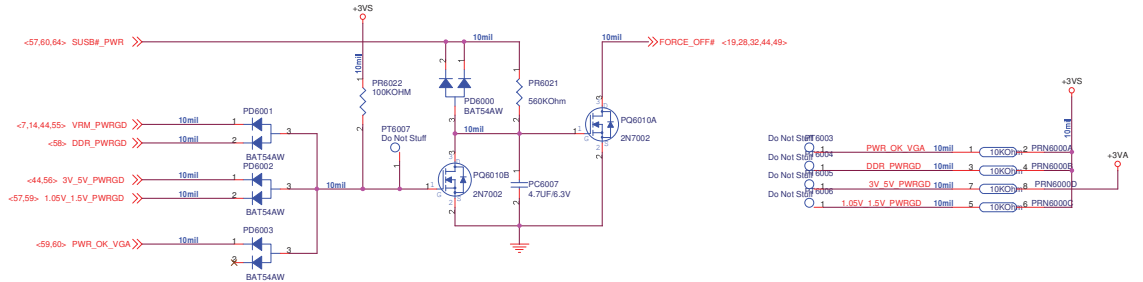

Power Voltage control

Modify V2.0G

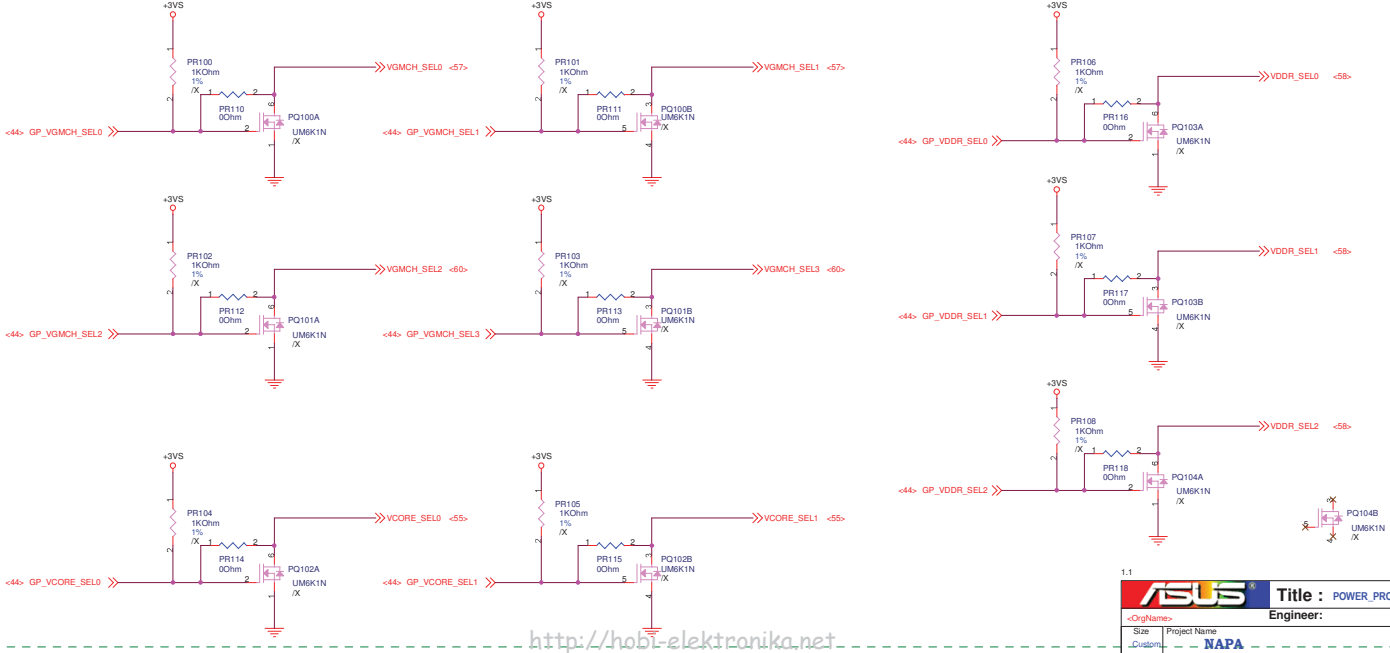

1.1

ASUS	Title : POWER_PROTECT	
<OrgName>	Engineer:	
Size: Custom	Project Name: NAPA	Rev: 2.0
Date: 星期三, 六月 30, 2007	Sheet 63 of 67	

http://hobi-elektronika.net

SUSB#_PWR POWER

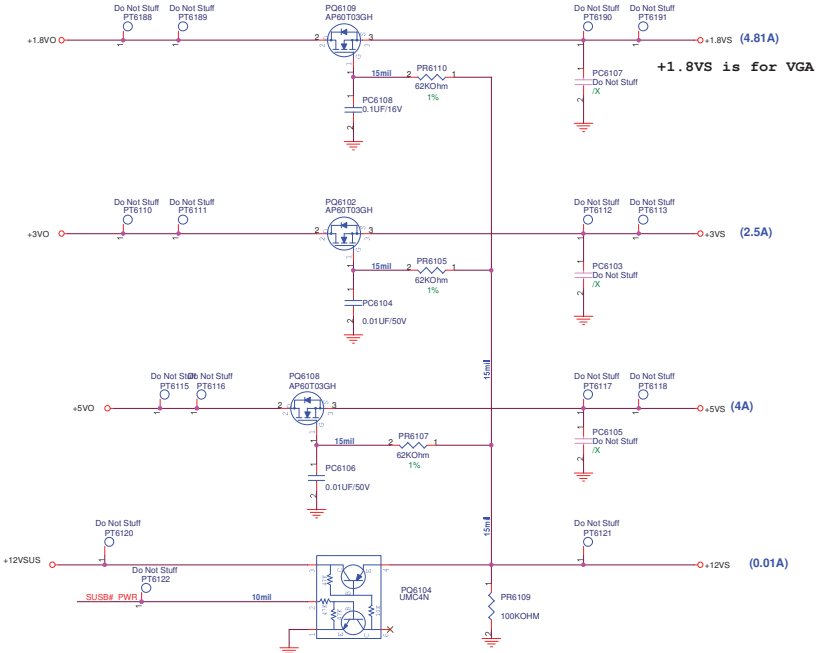

SUSC#_PWR POWER

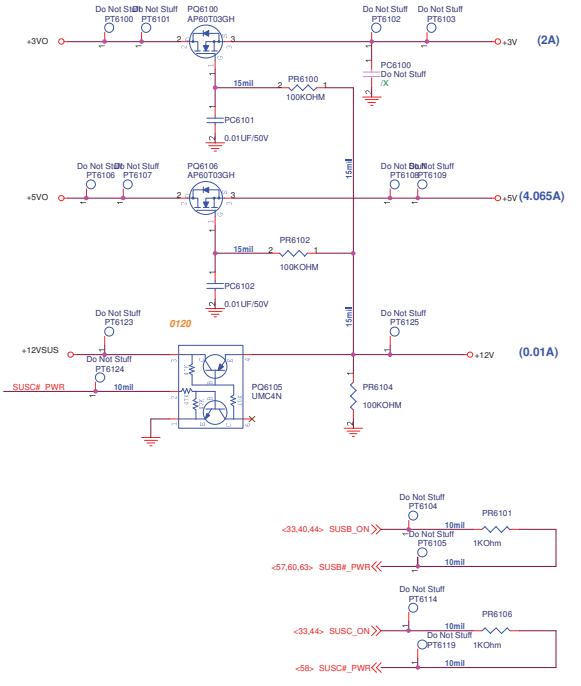

1.1

ASUS	Title : POWER_LOAD SWITCH	
<OrgName>	Engineer:	
Size: Custom	Project Name: NAPA	Rev: 2.0
Date: 星期三, 六月 30, 2007	Sheet 64 of 67	

http://hobi-elektronika.net

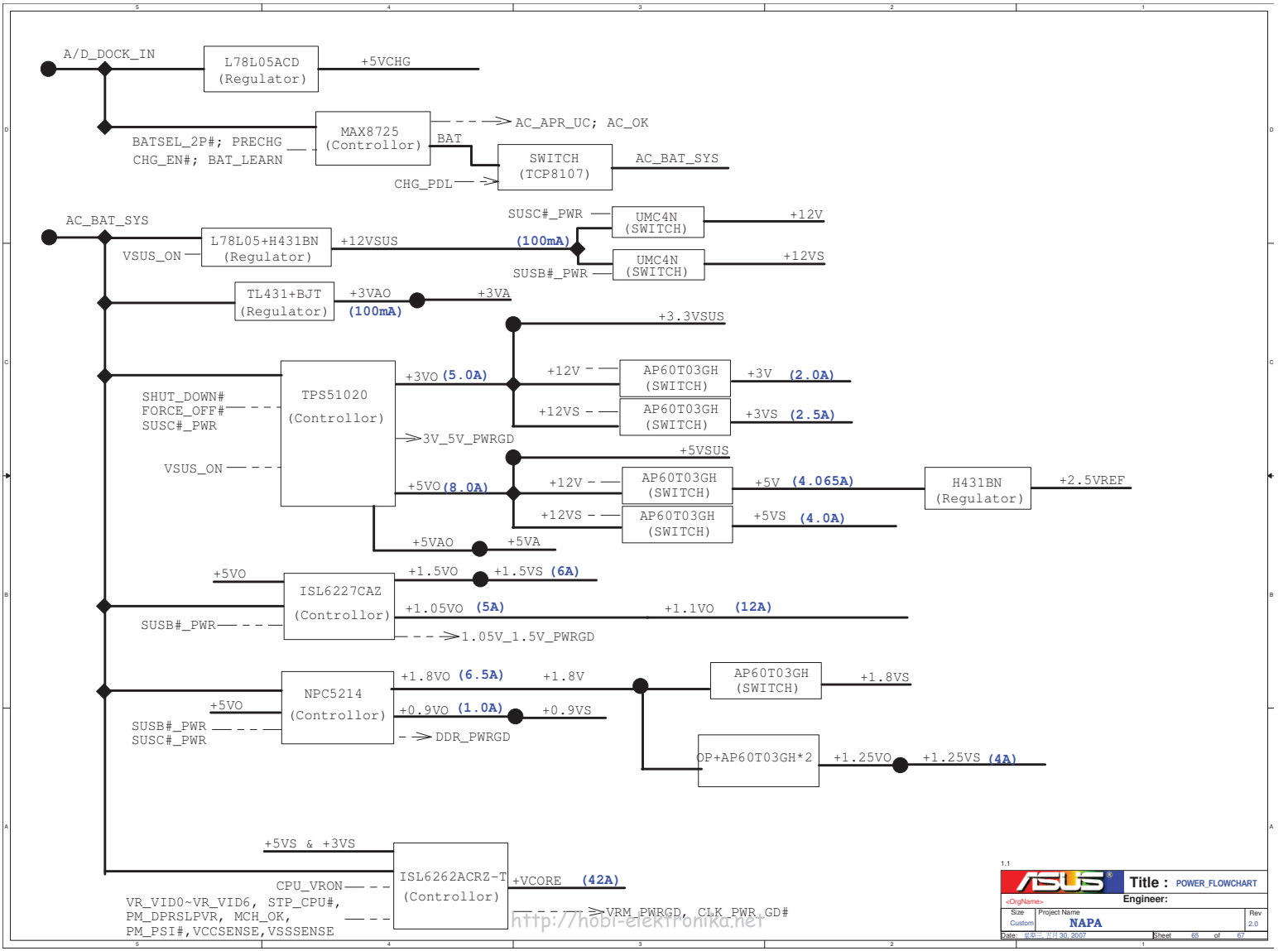

http://hobi-elektronika.net

A/D_DOCK_IN	A/D_DOCK_IN	<41,49,56,61,62>
AC_BAT_SYS	AC_BAT_SYS	<27,49,51,55,56,57,58,59,60,61>
+3VA	+3VA	<12,27,33,44,59,63>
+5VA	+5VA	<56>
+5VO	+5VO	<56,57,64>
+3VO	+3VO	<56,57,64>
+3VSUS	+3VSUS	<12,13,14,15,31,34,35,36,40,56>
+5VSUS	+5VSUS	<15,34,48,56,58,60>
+3V	+3V	<13,27,31,33,34,35,36,53,54,64>
+3VS	+3VS	<7,10,11,14,15,16,17,19,21,22,25,26,27,28,29,31,33,36,37,38,39,40,42,43,44,48,50,51,53,54,55,57,63,64>
+12VSUS	+12VSUS	<56,64>
+12V	+12V	<33,39,43,46,64>
+12VS	+12VS	<14,27,41,43,59,64>
+5V	+5V	<33,34,41,43,46,59,62,64>
+5VS	+5VS	<15,26,28,33,34,37,41,42,43,44,45,48,51,55,62,64>
+1.8VO	+1.8VO	<58,64>
+1.8V	+1.8V	<7,9,10,16,17,18,33,58>
+1.8VS	+1.8VS	<20,21,23,24,33,59,62,64>
+VCCP	+VCCP	<5,6,7,9,10,12,15,25,33,57,60>
+0.9VS	+0.9VS	<18,33,58>
BAT	BAT	<56,61>
+5VCHG	+5VCHG	<61,62>
+5VLCM	+5VLCM	<48,62>
+VCORE	+VCORE	<4,5,55>
+1.25VS	+1.25VS	<7,10,15,19,20,22,33,59>
BAT_CON	BAT_CON	<49,61>
+1.25VO	+1.25VO	<59>

1.1

ASUS	Title : POWER_SIGNAL	
<OrgName>	Engineer: Alan Chen	
Size: Custom	Project Name: NAPA	Rev: 2.0
Date: 星期三, 六月 30, 2007	Sheet 66 of 67	

http://hobi-elektronika.net

Rev	Date	Description
1.0	10/27/06	Placement: I/O is the same as Z96JP V2.1,and modify I/O location name.
1.0	10/27/06	Schematic:Refer the Z98S.
1.0	10/27/06	1.Add Mini-card Robson1 connector for function request<P31>
1.1	01/02/07	1.PC6113 from 0.1uF change to 0.47uF for GPU timing sequence<P60>
1.1	01/02/07	2.GR25,GR28 load 2k ohm for GPU PCI-DEVID setting<P19>
1.1	01/02/07	3.GR14 /N,GR18 load 10k ohm,GR19 /N,GR15 load 10k ohm for VRAM setting <P19>
1.1	01/02/07	4.U5H Pin_R5 from DACA_VREF change to DACB_VREF for TV Vref net name issue<P19>
1.1	01/02/07	5.R147,R149,R186,R188 from 499 ohm change to 120 ohm for VRAM clock termination<P23,24>
1.1	01/02/07	6.R379 load 10k ohm for GPU 27M clock enable setting<P25>
1.1	01/02/07	7.GPU LVDS_Lx & LVDS_Ux exchange for LVDS pindefine issue<P20>
1.1	01/02/07	8.SR48 pull +3VSUS change to pull +3VS for timing issue<P14>
1.1	01/02/07	9.R382 from pull GND change to pull +3VS for PEREQ# setting<P25>
1.1	01/02/07	10.R253 pin1 pull +3VA_EC change to pull +3VS <P28>
1.1	01/02/07	11.MIC1 Connector from 12G14001106M change to 12G14030106E for ME request<P43>
1.1	01/02/07	12.Del R424,Q32 for Earphon & SPDIF issue<P43>
1.1	01/02/07	13.Modify EC pindefine:Pin3(THRM_CPU#),Pin4(N/C),Pin27(PMTHERM#),Pin24(LID_EC#)<P44>
1.1	01/02/07	14.U45(EEPROM),R5734 load for LAN MAC issue<P34>
1.1	01/02/07	15.R378 /N for ITP clock setting==>Disable<P25>
1.1	01/02/07	16.Del G-Sensor component <P30>

Rev	Date	Description

http://hobi-elektronika.net