http://24hcongnghe.org

Vinafix

1. ALL RESISTANCE VALUES ARE IN OHMS, 0.1 WATT +/- 5%.
2. ALL CAPACITANCE VALUES ARE IN MICROFARADS.
3. ALL CRYSTALS & OSCILLATOR VALUES ARE IN HERTZ.

REV	ECN	DESCRIPTION OF REVISION	CK APPD	DATE
				2010-03-18

SCHEM,MLB_LDO,K6

PVT, 3/18/10

Page (.csa)		Contents	Sync	Date
1	1	Table of Contents	K17_MLB	05/20/2009
2	2	System Block Diagram	K69_MLB	08/19/2009
3	3	Power Block Diagram	K69_MLB	08/19/2009
4	4	BOM Configuration	K24_MLB	07/20/2009
5	5	Revision History	K24_MLB	07/20/2009
6	7	FUNC TEST	K24_MLB	07/20/2009
7	8	Power Aliases	K24_MLB	07/22/2009
8	9	SIGNAL ALIAS	K24_MLB	07/20/2009
9	10	CPU FSB	T27_MLB	08/27/2009
10	11	CPU Power & Ground	T27_MLB	07/20/2009
11	12	CPU Decoupling	T27_MLB	11/23/2009
12	13	eXtended Debug Port (mini-XDP)	T27_MLB	07/28/2009
13	14	MCP CPU Interface	T27_MLB	11/05/2009
14	15	MCP Memory Interface	T27_MLB	08/06/2009
15	16	MCP PCIe Interfaces	T27_MLB	11/05/2009
16	17	MCP Graphics	T27_MLB	11/05/2009
17	18	MCP SATA, USB & Ethernet	T27_MLB	11/23/2009
18	19	MCP HDA, LPC & MISC	T27_MLB	11/23/2009
19	20	MCP Power & Ground	T27_MLB	08/06/2009
20	23	MCP89 Memory Rail Gating	T27_MLB	11/23/2009
21	24	MCP89 GFX Core Rail Gating	T27_MLB	11/23/2009
22	25	MCP Standard Decoupling	T27_MLB	08/15/2009
23	26	MCP Graphics Support	T27_MLB	08/06/2009
24	28	SB Misc	T27_MLB	07/28/2009
25	29	DDR3 SO-DIMM Connector A	T27_MLB	07/28/2009
26	31	DDR3 SO-DIMM Connector B	T27_MLB	07/28/2009
27	32	DDR3 BYTE/BIT SWAPS-K6	K18_MLB	06/19/2009
28	33	FSB/DDR3 Vref Margining	T27_MLB	09/29/2009
29	34	RIGHT CLUTCH CONNECTOR	T27_MLB	07/28/2009
30	35	SecureDigital Card Reader	T27_MLB	09/30/2009
31	39	Ethernet PHY (Caesar II/IV)	T27_MLB	08/20/2009
32	40	Ethernet Connector	T27_MLB	07/28/2009
33	41	FireWire LLC/PHY (FW643E)	T27_MLB	07/20/2009
34	42	FireWire Port & PHY Power	T27_MLB	12/15/2009
35	43	FireWire Connector	T27_MLB	07/28/2009
36	45	SATA Connectors	T27_MLB	08/06/2009
37	46	External USB Connectors	T27_MLB	08/27/2009
38	48	Internal USB Support	T27_MLB	08/27/2009
39	49	SMC	T27_MLB	09/02/2009
40	50	SMC Support	T27_MLB	09/02/2009
41	51	LPC+SPI Debug Connector	T27_MLB	08/27/2009
42	52	K6 SMBUS CONNECTIONS	T27_MLB	08/21/2009
43	53	Voltage Sensing	T27_MLB	08/27/2009
44	54	Current Sensing	T27_MLB	09/30/2009
45	55	Thermal Sensors	T27_MLB	08/27/2009
46	56	Fan	K24_MLB	07/20/2009
47	57	WELLSPRING 1	T27_MLB	08/15/2009
48	58	WELLSPRING 2	T27_MLB	08/03/2009
49	59	Sudden Motion Sensor (SMS)	T27_MLB	07/20/2009
50	61	SPI ROM	T27_MLB	10/21/2009
51	62	AUDIO: CODEC/REGULATOR	AUDIO	08/31/2009
52	63	AUDIO: LINE INPUT FILTER	AUDIO	07/17/2009
53	65	AUDIO: HEADPHONE FILTER	AUDIO	07/17/2009
54	66	AUDI0: SPEAKER AMP	AUDIO	07/17/2009
55	67	AUDIO: JACK	AUDIO	08/25/2009
56	68	AUDIO: JACK TRANSLATORS	AUDIO	08/27/2009
57	69	DC-In & Battery Connectors	K24_MLB	07/20/2009
58	70	PBus Supply & Battery Charger	T27_MLB	07/29/2009
59	72	5V/3.3V SUPPLY	K24_MLB	07/20/2009
60	73	1.5V/1.35V LVDDR3 Supply	T27_MLB	08/06/2009
61	74	IMVP6 CPU VCore Regulator	K24_MLB	07/20/2009
62	75	MCP VCore Regulator	T27_MLB	08/18/2009
63	76	CPU VTT(1.05V) SUPPLY	K24_MLB	07/20/2009
64	77	Misc Power Supplies	T27_MLB	09/30/2009
65	78	Power Sequencing	T27_MLB	11/24/2009
66	79	Power FETs	T27_MLB	08/27/2009
67	90	LVDS CONNECTOR	K24_MLB	07/20/2009
68	93	DISPLAYPORT SUPPORT	K69_MLB	08/12/2009
69	94	DisplayPort Connector	K24_MLB	07/20/2009
70	97	LCD Backlight Driver	K69_MLB	08/27/2009
71	98	LCD Backlight Support	T27_MLB	07/28/2009
72	100	CPU/FSB Constraints	T27_MLB	08/03/2009
73	101	Memory Constraints	T27_MLB	08/03/2009
74	102	MCP Constraints 1	T27_MLB	08/03/2009
75	103	MCP Constraints 2	T27_MLB	08/27/2009
76	104	Ethernet Constraints	T27_MLB	11/23/2009
77	105	FireWire Constraints	T27_MLB	07/20/2009
78	106	SMC Constraints	T27_MLB	07/28/2009
79	108	K6/K69 Specific Constraints	T27_MLB	09/08/2009
80	109	K6/K69 PCB Rule Definitions	T27_MLB	08/06/2009

Schematic / PCB #'s

PART NUMBER	QTY	DESCRIPTION	REFERENCE DES	CRITICAL	BOM OPTION
051-8563	1	SCHEM,MLB_LDO,K6	SCH	CRITICAL	
820-2879	1	PCBF,MLB_LDO,K6	PCB	CRITICAL	

DRAWING TITLE=MLB LAST_MODIFIED=Thu Mar 18 17:53:39 2010
ABBREV=DRAWING

DRAWING TITLE: SCHEM,MLB_LDO,K6

Apple Inc.

DRAWING NUMBER: 051-8563 SIZE: D
REVISION: A.13.0
BRANCH:
PAGE: 1 OF 109
SHEET: 1 OF 80

NOTICE OF PROPRIETARY PROPERTY:
THE INFORMATION CONTAINED HEREIN IS THE PROPRIETARY PROPERTY OF APPLE COMPUTER, INC.
THE POSESSOR AGREES TO THE FOLLOWING:
I TO MAINTAIN THIS DOCUMENT IN CONFIDENCE
II NOT TO REPRODUCE OR COPY IT
III NOT TO REVEAL OR PUBLISH IT IN WHOLE OR PART
IV ALL RIGHTS RESERVED

www.vinafix.vn

http://24hcongnghe.org

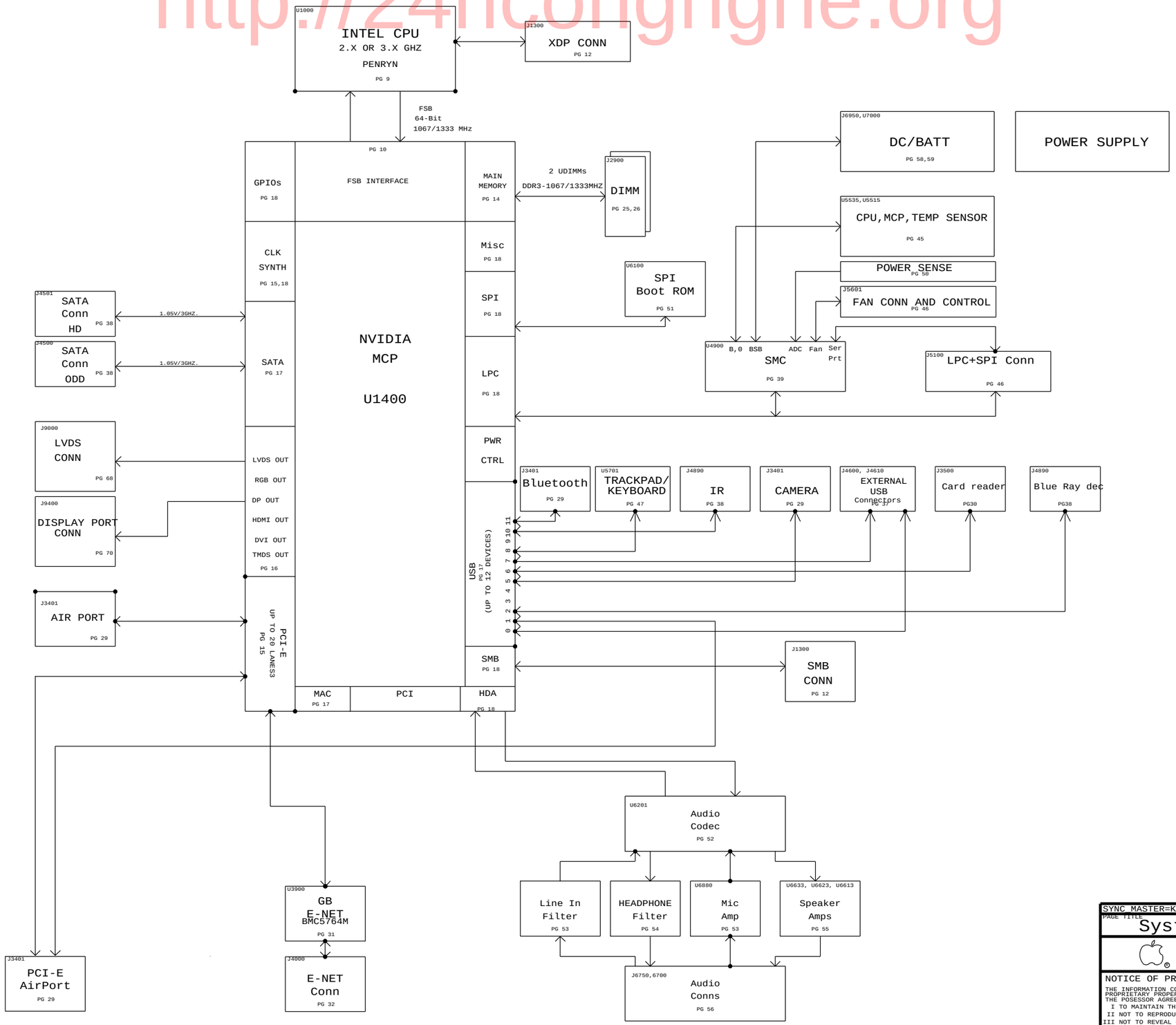

SYNC MASTER=K69 MLB SYNC DATE=08/19/2009

PAGE TITLE
System Block Diagram

Apple Inc.

DRAWING NUMBER 051-8563 SIZE D

REVISION A.13.0

BRANCH

PAGE 2 OF 109

SHEET 2 OF 80

NOTICE OF PROPRIETARY PROPERTY:
THE INFORMATION CONTAINED HEREIN IS THE PROPRIETARY PROPERTY OF APPLE COMPUTER, INC.
THE POSESSOR AGREES TO THE FOLLOWING:
I TO MAINTAIN THIS DOCUMENT IN CONFIDENCE
II NOT TO REPRODUCE OR COPY IT
III NOT TO REVEAL OR PUBLISH IT IN WHOLE OR PART
IV ALL RIGHTS RESERVED

www.vinafix.vn

http://24hourmagic.org

K6 POWER SYSTEM ARCHITECTURE

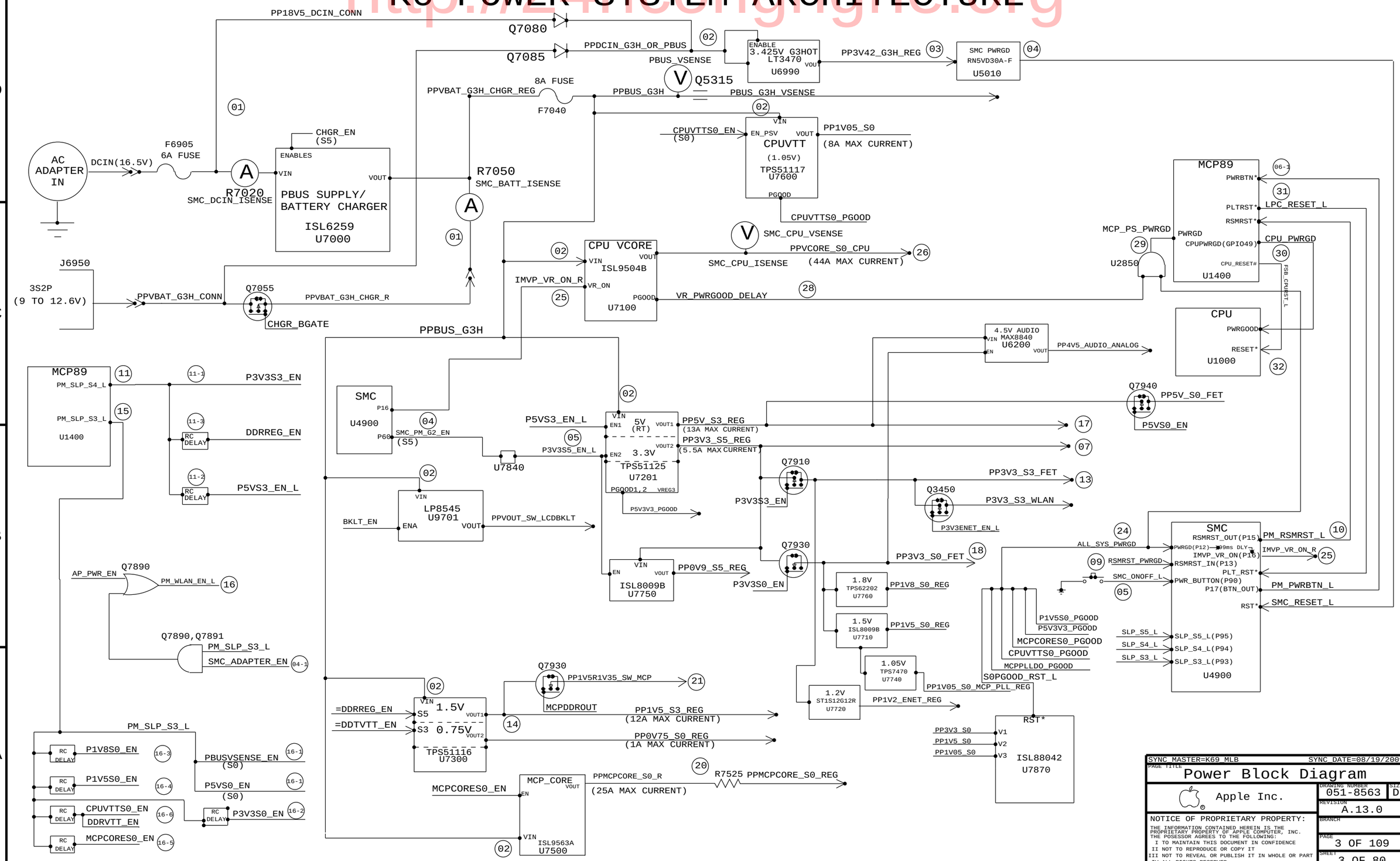

www.vinafix.vn

http://24hcongnghe.org

BOM Variants

BOM NUMBER	BOM NAME	BOM OPTIONS
639-1120	PCBA,MLB_LDO,BETTER,K6	K6_COMMON,CPU:2.4GHZ,MCP89M:A02,EEEE:DD24
639-1119	PCBA,MLB_LDO,BEST,K6	K6_COMMON,CPU:2.66GHZ,MCP89M:A02,EEEE:DD23
085-1634	K6 MLB_LDO DEVELOPMENT BOM	K6_DEVEL:PVT

Bar Code Labels / EEE #'s

PART NUMBER	QTY	DESCRIPTION	REFERENCE DES	CRITICAL	BOM OPTION
826-4393	1	LBL,P/N LABEL,PCB,28MM X 6 MM	[EEEE_DD23]	CRITICAL	EEEE:DD23
826-4393	1	LBL,P/N LABEL,PCB,28MM X 6 MM	[EEEE_DD24]	CRITICAL	EEEE:DD24

BOM Groups

BOM GROUP	BOM OPTIONS
K6_COMMON	COMMON,ALTERNATE,K6_MISC,K6_DEBUG:PROD,KB_BL,K6_PROGPARTS,RDRV:NO,SPI:25MHZ,CPU_CAP:15
K6_MISC	DP_ESD,MIKEY,BCM5764M,GL137,ENET_ESD,VFRQ:SLPS3,LVDDR3:YES,MCPPLL_R:REG,S0PGOOD_BJT,BOOST_VOL:LOW,HDA:1.5V
K6_PROGPARTS	BOOTROM:UNLOCKED,SMC:PROG,IR:PROG,WELLSPRING:PROG
K6_DEVEL:ENG	BKLT:ENG,BMON:ENG,XDP_CONN,LPCPLUS,VREFMRGN:YES,EFI_DEBUG,S0PGOOD_ISL,RDRV:IN_DEVEL
K6_DEVEL:PVT	LPCPLUS,XDP_CONN
K6_DEBUG:ENG	DEVEL_BOM,SMC_DEBUG:YES,XDP
K6_DEBUG:PVT	DEVEL_BOM,BKLT:PROD,BMON:PROD,SMC_DEBUG:YES,XDP,VREFMRGN:NO
K6_DEBUG:PROD	BKLT:PROD,BMON:PROD,SMC_DEBUG:YES,XDP,VREFMRGN:NO,LPCPLUS,MCPHVDD:P2V5,LDO:FIXED,HTOL_SENSE:YES

Module Parts

PART NUMBER	QTY	DESCRIPTION	REFERENCE DES	CRITICAL	BOM OPTION
337S3769	1	PDC,SLGVT,PRQ,2.26,25W,1066,R0,3M,BGA,P7550	U1000	CRITICAL	CPU:2.26GHZ
337S3680	1	PDC,LGDZ,PRQ,2.40,25W,1066,R0,3M,BGA	U1000	CRITICAL	CPU:2.4GHZ
337S3756	1	PDC,SLGFG,PRQ,2.53,25W,1066,R0,3M,BGA	U1000	CRITICAL	CPU:2.53GHZ
337S3761	1	PDC,SLGLA,PRQ,2.66,25W,1066,E0,3M,BGA	U1000	CRITICAL	CPU:2.66GHZ
337S3797	1	IC,MCP89M-A01,31X31MM,BGA1168	U1400	CRITICAL	MCP89M:A01
337S3866	1	IC,MCP89M-A01,31X31MM,BGA1168	U1400	CRITICAL	MCP89M:A02
341S2731	1	IC,1MBIT,SPI FLASH,K17/18	U3990	CRITICAL	BCM5764M
343S0493	1	IC,ASIC,BCM5764M,ENET CONTROLLER, 8x8, 64QFN	U3900	CRITICAL	BCM5764M
338S0753	1	IC,FW643-E2,1394B PHY/OHCI LINK/PCI-E,12	U4100	CRITICAL	
353S2896	1	IC,LP8545,LED BKLT CTRLR,LLP24	U9701	CRITICAL	

Programmable Parts

338S0563	1	IC,SMC,HS8/2117,9X9MM,TLP,HF	U4900	CRITICAL	SMC:BLANK
341T0240	1	SMC EXTERNAL,K6	U4900	CRITICAL	SMC:PROG
335S0610	1	IC,FLASH,SPI,32MBIT,3.3V,86MHZ,8-SOP	U6100	CRITICAL	BOOTROM:BLANK
341T0238	1	EFI UNLOCKED,K6/K69	U6100	CRITICAL	BOOTROM:UNLOCKED
341S2589	1	IC,EFI,LOCKED,K6	U6100	CRITICAL	BOOTROM:LOCKED
338S0633	1	IC,CYPRS,CY7C63803-LQXC,4X4MM,USB,24-QFN	U4800	CRITICAL	IR:BLANK
341S2384	1	IC,ENCORE II,CY7C63803-LQXC	U4800	CRITICAL	IR:PROG
337S2983	1	IC,PSOC+ W/ USB,56 PIN,MLF,CY8C24794	U5701	CRITICAL	WELLSPRING:BLANK
341S2616	1	IC,TP PSOC,K17,K18	U5701	CRITICAL	WELLSPRING:PROG

Alternate Parts

PART NUMBER	ALTERNATE FOR PART NUMBER	BOM OPTION	REF DES	COMMENTS:
152S0693	152S0778		ALL	CYNTEC AS ALTERNATE
152S0796	152S0685		ALL	CYNTEC AS ALTERNATE
157S0058	157S0055		ALL	DELTA AS ALTERNATE
104S0018	104S0023		ALL	DALE/VISHAY AS ALTERNATE
128S0093	128S0218		ALL	KEMET AS ALTERNATE
152S0874	152S0516		ALL	MAGLAYERS AS ALTERNATE
152S0847	152S0586		ALL	MAGLAYERS AS ALTERNATE
152S1025	152S1024		ALL	TOKO AS ALTERNATE
337S3769	337S3704		ALL	INTEL P7550 CPU AS ALTERNATE
152S1135	152S0586		ALL	TOKO AS ALTERNATE
516-0213	516-0201		ALL	MOLEX AS ALTERNATE
516S0790	516S0706		ALL	MOLEX AS ALTERNATE
376S0699	376S0360		ALL	SSM6P15FE AS ALTERNATE

DEVELOPMENT BOM

PART NUMBER	QTY	DESCRIPTION	REFERENCE DES	CRITICAL	BOM OPTION
085-1634	1	K6 MLB_LDO DEVELOPMENT BOM	DEVEL	CRITICAL	DEVEL_BOM

K6 BOARD STACK-UP

Top	SIGNAL
2	GROUND
3	SIGNAL(High Speed)
4	SIGNAL(High Speed)
5	GROUND
6	POWER
7	POWER
8	GROUND
9	SIGNAL(High Speed)
10	SIGNAL(High Speed)
11	GROUND
BOTTOM	SIGNAL

SYNC_MASTER=K24_MLB

PAGE TITLE: BOM Configuration

Apple Inc.

DRAWING NUMBER: 051-8563 SIZE: D

REVISION: A.13.0

BRANCH:

PAGE: 4 OF 109

SHEET: 4 OF 80

NOTICE OF PROPRIETARY PROPERTY:
THE INFORMATION CONTAINED HEREIN IS THE PROPRIETARY PROPERTY OF APPLE COMPUTER, INC.
THE POSESSOR AGREES TO THE FOLLOWING:
I TO MAINTAIN THIS DOCUMENT IN CONFIDENCE
II NOT TO REPRODUCE OR COPY IT
III NOT TO REVEAL OR PUBLISH IT IN WHOLE OR PART
IV ALL RIGHTS RESERVED

www.vinafix.vn

http://24hcongnghe.org

Revision History

NOTE: All page numbers are .csa, not PDF. See page 1 for .csa -> PDF mapping.

SYNC_MASTER=K24_MLB
PAGE TITLE
Revision History

Apple Inc.

DRAWING NUMBER 051-8563
SIZE D
REVISION A.13.0
BRANCH
PAGE 5 OF 109
SHEET 5 OF 80

NOTICE OF PROPRIETARY PROPERTY:
THE INFORMATION CONTAINED HEREIN IS THE PROPRIETARY PROPERTY OF APPLE COMPUTER, INC.
THE POSESSOR AGREES TO THE FOLLOWING:
I TO MAINTAIN THIS DOCUMENT IN CONFIDENCE
II NOT TO REPRODUCE OR COPY IT
III NOT TO REVEAL OR PUBLISH IT IN WHOLE OR PART
IV ALL RIGHTS RESERVED

www.vinafix.vn

http://24hcongnghe.org

Functional Test Points

Fan Connectors

TRUE	PP5V_S0	(NEED 2 TP)	6 7 65
TRUE	FAN_RT_PWM		46
TRUE	FAN_RT_TACH		46

(NEED TO ADD 3 GND TP)

MIC FUNC_TEST

TRUE	BI_MIC_LO	55 56
TRUE	BI_MIC_HI	55 56
TRUE	BI_MIC_SHIELD	55 56

SPEAKER FUNC_TEST

TRUE	SPKRAMP_L_N_OUT	54 55
TRUE	SPKRAMP_L_P_OUT	54 55
TRUE	SPKRAMP_R_N_OUT	54 55
TRUE	SPKRAMP_R_P_OUT	54 55
TRUE	SPKRAMP_SUB_N_OUT	54 55
TRUE	SPKRAMP_SUB_P_OUT	54 55

LVDS FUNC_TEST

TRUE	PP3V3_LCDVDD_SW_F	6 67
TRUE	PP3V3_S0_LCD_F	6 67
TRUE	PPVOUT_SW_LCDBKLT	67 70
TRUE	BKL_VSYNC	67 70
TRUE	LVDS_DDC_CLK	8 67
TRUE	LVDS_DDC_DATA	8 67
TRUE	LVDS_IG_A_DATA_N<0>	8 67 74
TRUE	LVDS_IG_A_DATA_P<0>	8 67 74
TRUE	LVDS_IG_A_DATA_N<1>	8 67 74
TRUE	LVDS_IG_A_DATA_P<1>	8 67 74
TRUE	LVDS_IG_A_DATA_N<2>	8 67 74
TRUE	LVDS_IG_A_DATA_P<2>	8 67 74
TRUE	LVDS_CONN_A_CLK_F_N	67 79
TRUE	LVDS_CONN_A_CLK_F_P	67 79
TRUE	LED_RETURN_1	67 70
TRUE	BKL_ISEN2	70
TRUE	BKL_ISEN3	70
TRUE	LED_RETURN_4	67 70
TRUE	LED_RETURN_5	67 70
TRUE	LED_RETURN_6	67 70

(NEED TO ADD 5 GND TP)

SATA ODD CONN

TRUE	PP5V_SW_ODD (NEED 4 TP)	6 8
TRUE	SMC_ODD_DETECT	36 39
TRUE	SATA_ODD_D2R_UF_P	36 79
TRUE	SATA_ODD_D2R_UF_N	36 79
TRUE	SATA_ODD_R2D_P	36 74
TRUE	SATA_ODD_R2D_N	36 74

(NEED TO ADD 4 GND TP)

SATA HDD/IR/SIL

TRUE	PP5V_S0_HDD_FLT (NEED 3 TP)	6 36
TRUE	SATA_HDD_R2D_P	36 74
TRUE	SATA_HDD_R2D_N	36 74
TRUE	SATA_HDD_D2R_C_P	36 74
TRUE	SATA_HDD_D2R_C_N	36 74
TRUE	SYS_LED_ANODE_R	36
TRUE	IR_RX_OUT	36 38
TRUE	PP5V_S3_IR_R	36

(NEED TO ADD 5 GND TP)

BATT POWER CONN

TRUE	SMBUS_SMC_BSA_SCL	6 42 78
TRUE	SMBUS_SMC_BSA_SDA	6 42 78
TRUE	SYS_DETECT_L	57
TRUE	PPVBAT_G3H_CONN (NEED 3 TP)	57 58

(NEED TO ADD 4 GND TP)

BIL CONN

TRUE	PP3V42_G3H	6 7
TRUE	SMBUS_SMC_BSA_SCL	6 42 78
TRUE	SMBUS_SMC_BSA_SDA	6 42 78
TRUE	SMC_BIL_BUTTON_L	39 40 57
TRUE	SMC_LID_R	57

(NEED TO ADD 4 GND TP)

RIGHT CLUTCH CONN

TRUE	PP5V_S3_BTCAMERA_F	29
TRUE	PCIE_AP_D2R_P	15 29 74
TRUE	PCIE_AP_D2R_N	15 29 74
TRUE	PCIE_AP_R2D_P	29 74
TRUE	PCIE_AP_R2D_N	29 74
TRUE	PCIE_CLK100M_AP_CONN_P	29 79
TRUE	PCIE_CLK100M_AP_CONN_N	29 79
TRUE	USB_CAMERA_CONN_P	29 79
TRUE	USB_CAMERA_CONN_N	29 79
TRUE	PP5V_WLAN (NEED 2 TP)	6 29
TRUE	PCIE_WAKE_L	15 24 29
TRUE	SMBUS_SMC_A_S3_SCL	6 42 78
TRUE	SMBUS_SMC_A_S3_SDA	6 42 78
TRUE	USB_BT_CONN_P	29 79
TRUE	USB_BT_CONN_N	29 79
TRUE	AP_CLKREQ_Q_L	29
TRUE	AP_RESET_CONN_L	29

(NEED TO ADD 6 GND TP)

IPD_FLEX_CONN

TRUE	PP3V3_S3	6 7
TRUE	PP18V5_S3	6 48
TRUE	Z2_CS_L	47 48
TRUE	Z2_DEBUG3	47 48
TRUE	Z2_MOSI	47 48
TRUE	Z2_MISO	47 48
TRUE	Z2_SCLK	47 48
TRUE	Z2_BOOST_EN	48
TRUE	Z2_HOST_INTN	47 48
TRUE	Z2_CLKIN	47 48
TRUE	Z2_KEY_ACT_L	47 48
TRUE	Z2_RESET	47 48
TRUE	PSOC_MISO	47 48
TRUE	PSOC_MOSI	47 48
TRUE	PSOC_SCLK	47 48
TRUE	SMBUS_SMC_A_S3_SDA	6 42 78
TRUE	SMBUS_SMC_A_S3_SCL	6 42 78
TRUE	PSOC_F_CS_L	47 48
TRUE	PICKB_L	47 48

(NEED TO ADD 2 GND TP)

KEYBOARD CONN

TRUE	PP3V3_S3	6 7
TRUE	PP3V42_G3H	6 7
TRUE	WS_KBD1	47
TRUE	WS_KBD2	47
TRUE	WS_KBD3	47
TRUE	WS_KBD4	47
TRUE	WS_KBD5	47
TRUE	WS_KBD6	47
TRUE	WS_KBD7	47
TRUE	WS_KBD8	47
TRUE	WS_KBD9	47
TRUE	WS_KBD10	47
TRUE	WS_KBD11	47
TRUE	WS_KBD12	47
TRUE	WS_KBD13	47
TRUE	WS_KBD14	47
TRUE	WS_KBD15_CAP	47
TRUE	WS_KBD16_NUM	47
TRUE	WS_KBD17	47
TRUE	WS_KBD18	47
TRUE	WS_KBD19	47
TRUE	WS_KBD20	47
TRUE	WS_KBD21	47
TRUE	WS_KBD22	47
TRUE	WS_KBD23	47
TRUE	WS_KBD_ONOFF_L	47
TRUE	WS_LEFT_SHIFT_KBD	47
TRUE	WS_LEFT_OPTION_KBD	47
TRUE	WS_CONTROL_KBD	47

(NEED TO ADD 2 GND TP)

KBD BACKLIGHT CONN

TRUE	KBDLED_ANODE	48
TRUE	SMC_KDBLED_PRESENT_L	48

(NEED TO ADD 1 GND TP)

T57 CONN

TRUE	PP5V_S3	6 7
TRUE	PP3V3_S3	6 7
TRUE	T57_PWR_EN	18
TRUE	T57_RESET	18
TRUE	USB_T57_N	38 75
TRUE	USB_T57_P	38 75

(NEED TO ADD 5 GND TP)

DEBUG VOLTAGE

TRUE	PPVCORE_S0_CPU	7 43
TRUE	PPVCORE_S0_MCP	7 43
TRUE	PP1V2_ENET	7
TRUE	PP1V05_S0	7 65
TRUE	PP1V5_S0	7 65 79
TRUE	PP1V8_S0	7
TRUE	PP3V3_S0	7 65 79
TRUE	PP5V_S0	6 7 65
TRUE	PP3V3_S3	6 7
TRUE	PP5V_S3	6 7
TRUE	PP0V9_S5	7
TRUE	PP3V3_S5	7 65 79
TRUE	PP3V42_G3H	6 7
TRUE	PPBUS_G3H	7 43
TRUE	PP3V3_ENET	7
TRUE	PP5V_WLAN	6 29
TRUE	PP5V_SW_ODD	6 8
TRUE	PP5V_S0_HDD_FLT	6 36
TRUE	PP18V5_S3	6 48
TRUE	PP3V3_S0_LCD_F	6 67
TRUE	PP3V3_LCDVDD_SW_F	6 67
TRUE	PP4V5_AUDIO_ANALOG	51
TRUE	PP1V5R1V35_S3	7 79
TRUE	SMC_PM_G2_EN	39 65
TRUE	PM_SLP_S4_L	18 39 40 65
TRUE	PM_SLP_S3_L	18 39 65 69

(NEED TO ADD 6 GND TP)

SPI DEBUG CONN

TRUE	PP3V42_G3H	6 7
TRUE	SPI_CS0_L	41 75
TRUE	SPI_CLK	41 75
TRUE	SPI_MOSI	41 75
TRUE	SPI_MISO	18 41 75
TRUE	SPIROM_USE_MLB	18 41 50

DC POWER CONN

TRUE	PP18V5_DCIN_FUSE (NEED 3 TP)	57
TRUE	ADAPTER_SENSE	57

(NEED TO ADD 4 GND TP)

FSB SIGNALS WITH NOTEST

NO_TEST=TRUE	FSB_A_L<35..3>	9 13 72
NO_TEST=TRUE	FSB_ADS_L	9 13 72
NO_TEST=TRUE	FSB_ADSTB_L<1..0>	9 13 72
NO_TEST=TRUE	FSB_D_L<63..0>	9 13 72
NO_TEST=TRUE	FSB_DINV_L<3..0>	9 13 72
NO_TEST=TRUE	FSB_DSTB_L_N<3..0>	9 13 72
NO_TEST=TRUE	FSB_DSTB_L_P<3..0>	9 13 72
NO_TEST=TRUE	FSB_HIT_L	9 13 72
NO_TEST=TRUE	FSB_HITM_L	9 13 72
NO_TEST=TRUE	FSB_LOCK_L	9 13 72
NO_TEST=TRUE	FSB_REQ_L<4..0>	9 13 72

SYNC_MASTER=K24_MLB

PAGE TITLE: FUNC TEST

Apple Inc.

DRAWING NUMBER: 051-8563 SIZE: D

REVISION: A.13.0

BRANCH:

PAGE: 7 OF 109

SHEET: 6 OF 80

NOTICE OF PROPRIETARY PROPERTY:
THE INFORMATION CONTAINED HEREIN IS THE PROPRIETARY PROPERTY OF APPLE COMPUTER, INC.
THE POSESSOR AGREES TO THE FOLLOWING:
I TO MAINTAIN THIS DOCUMENT IN CONFIDENCE
II NOT TO REPRODUCE OR COPY IT
III NOT TO REVEAL OR PUBLISH IT IN WHOLE OR PART
IV ALL RIGHTS RESERVED

www.vinafix.vn

http://24hcongnghe.org

"S0,S0M" RAILS

61 =PPVCORE_S0_CPU_REG
(CPU VCORE PWR)
PPVCORE_S0_CPU 6 43
MIN_LINE_WIDTH=0.6 MM
MIN_NECK_WIDTH=0.3 MM
VOLTAGE=1.25V
MAKE_BASE=TRUE
=PPVCORE_S0_CPU 10 11

63 =PPCPUVTT_S0_REG
PP1V05_S0 6 65
MIN_LINE_WIDTH=0.6 mm
MIN_NECK_WIDTH=0.2 mm
VOLTAGE=1.05V
MAKE_BASE=TRUE
=PP1V05_S0_CPU 9 10 11 12 61
=PP1V05_S0_MCP_FSB 13 19 22
=PP1V05_S0_MCP_AVDD_UF 22
=PP1V05_S0_MCP_SATA_DVDD 19 22
=PP1V05_S0_MCP_PLL_UF_R 64
=PP1V05_FW_P1V0FWFET 34
=PP1V05_S0_FWPWRCTL 34
=PP1V05_SW_MCP_FSB 19 22
=PP1V05_S0_MCP_PE_DVDD 7 22
=PP1V05_S0_MCP_M2CLK_DLL 14 22
=PP1V05_S0_MCP_PLL_IFP 16 23
=PP1V05_S0_MCP_DP0_VDD 16 23

62 =PPMCPCORE_S0_REG
(MCP VCORE AFTER SENSE RES)
PPVCORE_S0_MCP 6 43
MIN_LINE_WIDTH=0.6 MM
MIN_NECK_WIDTH=0.2 MM
VOLTAGE=1.05V
MAKE_BASE=TRUE
=PPVCORE_S0_MCP 19 22
=PPVCORE_S0_MCPGFXFET 21

LVDDR VRef/VTT (0.75V/0.675V) Rails

60 =PPVTT_S0_DDR_LDO
PPDDRVTT_S0
MIN_LINE_WIDTH=0.4 MM
MIN_NECK_WIDTH=0.2 mm
VOLTAGE=0.75V
MAKE_BASE=TRUE
=PPDDRVTT_S0_MEM_A 25
=PPDDRVTT_S0_MEM_B 26

60 28 =PPVTT_S3_DDR_BUF
PPDDRVREF_S3
MIN_LINE_WIDTH=0.3 mm
MIN_NECK_WIDTH=0.2 mm
VOLTAGE=0.75V
MAKE_BASE=TRUE

64 =PP1V5_S0_REG
PP1V5_S0 6 65 79
MIN_LINE_WIDTH=0.6 MM
MIN_NECK_WIDTH=0.2 mm
VOLTAGE=1.5V
MAKE_BASE=TRUE
=PP1V5_S0_CPU 10 11
=PP1V5_S0_SATARDRVR 36
=PP1V5_S0_MCP_PLL_VLDO
=PP1V8R1V5_S0_AUDIO 51
=PP1V5_S0_MCP_HDA_R 8
=PP1V5_S0_AUDIO_R 8

64 =PP1V8_S0_REG
PP1V8_S0 6
MIN_LINE_WIDTH=0.5 MM
MIN_NECK_WIDTH=0.2 mm
VOLTAGE=1.8V
MAKE_BASE=TRUE
=PP3V3R1V8_S0_MCP_IFP_VDD 16 23
=PP1V8_S0_AUDIO

64 =PP1V05_S0_MCP_PLL_OR
PP1V05_S0_MCP_PLL_UF
MIN_LINE_WIDTH=0.6 MM
MIN_NECK_WIDTH=0.2 mm
VOLTAGE=1.05V
MAKE_BASE=TRUE
=PP1V05_S0_MCP_PLL_UF 22

UNUSED MCP PE0[3:0] AVDD/DVDD

19 =PP1V05_S0_MCP_PE_DVDD0
19 =PP1V05_S0_MCP_PE_AVDD0
(SINCE PE0[3:0] IS NOT USED ON K6)

(CONNECTS TO MCP BALLS) 19 =PP1V05_S0_MCP_PE_DVDD1 =PP1V05_S0_MCP_PE_DVDD 7 22 (CONNECTS TO THE DECAPS)
(CONNECTS TO MCP BALLS) 19 =PP1V05_S0_MCP_PE_AVDD1 PP1V05_S0_MCP_PE_AVDD 22 (CONNECTS TO THE DECAPS)
MAKE_BASE=TRUE

66 =PP5V_S0_FET
PP5V_S0
MIN_LINE_WIDTH=0.6 MM
MIN_NECK_WIDTH=0.2 MM
VOLTAGE=5V
MAKE_BASE=TRUE
=PP5V_S0_HDD 36
=PP5V_S0_LPCPLUS 41
=PP5V_S0_FAN_RT 46
=PP5V_S0_CPU_IMVP 61
=PP5V_S0_KBDLED 48
=PP5VR3V3_S0_DPCADET 69
=PP5V_S0_CPUVTTS0 63
=PP5V_S0_BKL 70
=PP5V_S0_MCPREG 62
=PP5V_S0_MCPFSBFET 21

66 =PP3V3_S0_FET
PP3V3_S0 6 65 79
MIN_LINE_WIDTH=0.6 mm
MIN_NECK_WIDTH=0.2 mm
VOLTAGE=3.3V
MAKE_BASE=TRUE
=PP3V3_S0_XDP 12
=PP3V3_S0_MCP 19 22
=PP3V3_S0_P1V5S0 64
=PP3V3_S0_DEBUGROM 41
=PP3V3_S0_ODD 36
=PP3V3_S0_SMBUS_SMC_0_S0 42
=PP3V3_S0_SMBUS_SMC_B_S0 42
=PP3V3_S0_SMBUS_MCP_0 42
=PP3V3_S0_FAN_RT 46
=PP3V3_S0_AUDIO 51 55 56
=PP3V3_S0_IMVP 61
=PP3V3_S0_LCD 67
=PP3V3_S0_MCP_GPIO 16 17 18
=PP3V3_S0_MCP_PLL_UF 22
=PP3V3_S0_MCP_HVDD 19 22
=PP3V3_S0_SMC 40
=PP3V3_S0_MCPTHMSNS 45
=PP3V3_S0_CPUTHMSNS 45
=PP3V3_S0_DPCONN 69
=PPSPD_S0_MEM_A 25
=PPSPD_S0_MEM_B 26
=PP3V3_S0_PWRCTL 65
=PP3V3_S0_ENETPHY 31
=PP3V3_S0_CPUVTTISNS 44
=PP3V3_S0_TPAD 48
=PP3V3_S0_SMBUS_MCP_1 42
=PP3V3_S0_P1V8S0 64
=PP3V3_S0_BKL_VDDIO 70
=PP3V3_S0_MCPDDRISNS 44
=PP3V3_S0_MCP_PLL_VLDO
=PP3V3_S0_FWPWRCTL 34
=PP3V3_S0_FWLATEVG 34 35
=PP3V3_S0_SDCONN 30
=PP3V3_S0_MCPCOREISNS 44
=PP3V3_S0_MCP_HDA_R 8
=PP3V3_S0_AUDIO_R 8
=PP3V3_S0_OPA333 22

"ENET" RAILS

8 =PP3V3_ENET_FET_R
400mA
PP3V3_ENET 6
MIN_LINE_WIDTH=0.6 mm
MIN_NECK_WIDTH=0.2 mm
VOLTAGE=3.3V
MAKE_BASE=TRUE
300mA =PP3V3_ENET_MCP_RMGT 17 19 22
=PP3V3_ENET_MCP_PLL_MAC 22
~100mA =PP3V3_ENET_PHY 24 31 64
=PP3V3_ENET_PWRCTL 65

(BCM5764M)
64 =PP1V2_ENET_REG
700 mA max output
64 =PP1V2_ENET_PHY_REG
(BCM57765) ~400mA
PP1V2_ENET 6
MIN_LINE_WIDTH=0.4 mm
MIN_NECK_WIDTH=0.2 mm
VOLTAGE=1.2V
MAKE_BASE=TRUE
=PP1V2_ENET_PHY 31

66 =PP0V9_ENET_FET
PP0V9_ENET
MIN_LINE_WIDTH=0.4 mm
MIN_NECK_WIDTH=0.2 mm
VOLTAGE=0.9V
MAKE_BASE=TRUE
=PP0V9_ENET_MCP_RMGT 19 22

"S3" RAILS

LVDDR (1.5V/1.35V) Rails

60 =PPDDR_S3_REG
PP1V5R1V35_S3 6 79
MIN_LINE_WIDTH=0.6 mm
MIN_NECK_WIDTH=0.2 mm
VOLTAGE=1.5V (OR 1.35V)
MAKE_BASE=TRUE
=PPLVDDR_S3_MEM_A 25
=PPLVDDR_S3_MEM_B 26
0 mA =PP1V5R1V35_S3_MCP_MEM 14
4250 mA =PP1V5R1V35_S0_MCPDDRFET 20
=PPVIN_S0_DDRREG_LDO 60

66 =PP3V3_S3_FET
PP3V3_S3 6
MIN_LINE_WIDTH=0.6 mm
MIN_NECK_WIDTH=0.2 mm
VOLTAGE=3.3V
MAKE_BASE=TRUE
=PP3V3_S3_SMBUS_SMC_A_S3 42
=PP3V3_S3_PDCISENS 60
=PP3V3_S3_VREFMRGN 28
=PP3V3_S3_WLAN 29
=PP3V3_S3_MCP_GPIO 18
=PP3V3_S3_TPAD 47 48
=PP3V3_S3_SMS 49
=PP3V3_S3_CARDREADER 30
=PP3V3_S3_T57 38
=PP3V3_ENET_P1V2ENET 64

59 =PP5V_S3_REG
PP5V_S3 6
MIN_LINE_WIDTH=0.6 mm
MIN_NECK_WIDTH=0.2 mm
VOLTAGE=5V
MAKE_BASE=TRUE
=PP5V_S3_RTUSB 37
=PP5V_S3_IR 36 38
=PP5V_S3_MCPDDRFET 20
=PP5V_S3_SYSLED 40
=PP5V_S3_TPAD 48
=PP5V_S3_WLAN 29
=PP5V_S3_DDRREG 60
=PP5V_S3_AUDIO 51 53 55
=PP5V_S3_AUDIO_AMP 54
=PP5V_S3_P5VS0FET 66
=PP5V_S0_ODD 36
=PP5V_S3_BTCAMERA 29
=PP5V_S3_T57 38

"S5" RAILS

59 =PP3V3_S5_REG
PP3V3_S5 6 65 79
MIN_LINE_WIDTH=0.6 mm
MIN_NECK_WIDTH=0.2 mm
VOLTAGE=3.3V
MAKE_BASE=TRUE
=PP3V3_S5_MCP_GPIO 17 18
=PP3V3_S5_ROM 50
=PP3V3_S5_LCD 67
=PP3V3_S5_MCP 19 22
=PP3V3_S5_MCPPWRGD 24
=PP3V3_S5_P3V3S3FET 66
=PP3V3_S5_P3V3S0FET 66
=PP3V3_S5_P3V3ENETFET 66
=PP3V3_S5_DP_PORT_PWR 69
=PP3V3_S5_P0V9S5 64
=PP3V3_FW_P3V3FWFET 34
=PP3V3_S5_P0V9ENETFET 66
=PP3V3_S5_VMON 65
=PP3V3_S5_SMBUS_SMC_MGMT 42

0.9V Rails

64 =PP0V9_S5_REG
PP0V9_S5 6
MIN_LINE_WIDTH=0.4 mm
MIN_NECK_WIDTH=0.2 mm
VOLTAGE=0.9V
MAKE_BASE=TRUE
105 mA/241 mA =PP0V9_S5_MCP_VDD_AUXC 19 22
139 mA/ 0 mA =PP0V9_ENET_P0V9ENETFET 66

"G3H" RAILS

57 =PP3V42_G3H_REG
PP3V42_G3H 6
MIN_LINE_WIDTH=0.6 MM
MIN_NECK_WIDTH=0.2 MM
VOLTAGE=3.42V
MAKE_BASE=TRUE
=PPVIN_S5_SMCVREF 40
=PP3V42_G3H_SMBUS_SMC_BSA 42
=PP3V42_G3H_PWRCTL 65
=PP3V42_G3H_CHGR 58 65
=PP3V42_G3H_SMCUSBMUX 37
=PP3V42_G3H_TPAD 47
=PP3V42_G3H_BATT 57
=PP3V3_S5_SMC 39 40
=PP3V3_S5_LPCPLUS 41
=PP3V42_G3H_BMON_ISNS 44
TU086 =PP3V42_G3H_ONEWIRE 57
PP3V3_G3_RTC 18 19 22
=PP3V42_G3H_OPA330 22

57 =PP18V5_DCIN_CONN
PPDCIN_S5_S5
MIN_LINE_WIDTH=0.6 MM
MIN_NECK_WIDTH=0.3 MM
VOLTAGE=18.5V
MAKE_BASE=TRUE
=PPDCIN_S5_CHGR 58

58 =PPBUS_G3H
PPBUS_G3H 6 43
MIN_LINE_WIDTH=0.6 mm
MIN_NECK_WIDTH=0.3 MM
VOLTAGE=12.6V
MAKE_BASE=TRUE
=PPBUS_S0_LCDBKLT 71
=PPVIN_S0_MCPCORE 62
=PPVIN_S3_DDRREG 60
=PPVIN_S5_3V3S5 59
=PPVIN_S3_5VS3 59
=PPBUS_S5_FWPWRSW 34
=PPBUS_S5_CPUREGS_ISNS_R 44
(BEFORE HIGH SIDE SENSING RES.)

44 =PPBUS_S5_CPUREGS_ISNS
(AFTER HIGH SIDE CPU VCORE
& CPU VTT SENSING RES.)
PPBUS_S5_IMVP_VTT_ISNS
MIN_LINE_WIDTH=0.6 mm
MIN_NECK_WIDTH=0.3 MM
VOLTAGE=12.6V
MAKE_BASE=TRUE
=PPVIN_S0_CPUVTTS0 63
=PPVIN_S5_CPU_IMVP 61

"FIREWIRE" RAILS

34 =PP3V3_FW_FET
PP3V3_FW
MIN_LINE_WIDTH=0.6 MM
MIN_NECK_WIDTH=0.2 MM
VOLTAGE=3.3V
MAKE_BASE=TRUE
=PP3V3_FW_FWPHY 33 34 35

34 =PPBUS_FW_FET
PPVP_FW
MIN_LINE_WIDTH=0.4 mm
MIN_NECK_WIDTH=0.2 mm
VOLTAGE=12.6V
MAKE_BASE=TRUE
=PPVP_FW_PORT1 35
=PPVP_FW_PHY_CPS_FET 35

34 =PP1V0_FW_FET_R
PP1V05_FW
MIN_LINE_WIDTH=0.6 MM
MIN_NECK_WIDTH=0.2 MM
VOLTAGE=1.05V
MAKE_BASE=TRUE
=PP1V0_FW_FWPHY 33 34

SYNC_MASTER=K24_MLB SYNC_DATE=07/22/2009
PAGE TITLE
Power Aliases

Apple Inc.

DRAWING NUMBER 051-8563 SIZE D
REVISION A.13.0
BRANCH
PAGE 8 OF 109
SHEET 7 OF 80

NOTICE OF PROPRIETARY PROPERTY:
THE INFORMATION CONTAINED HEREIN IS THE PROPRIETARY PROPERTY OF APPLE COMPUTER, INC.
THE POSESSOR AGREES TO THE FOLLOWING:
I TO MAINTAIN THIS DOCUMENT IN CONFIDENCE
II NOT TO REPRODUCE OR COPY IT
III NOT TO REVEAL OR PUBLISH IT IN WHOLE OR PART
IV ALL RIGHTS RESERVED

www.vinafix.vn

http://24hcongnghe.org

HEATSINK STANDOFFS

Z0902 STDOFF-4.50D.98H-1.1-3.48-TH — LEFT OF CPU

Z0901 STDOFF-4.50D.98H-1.1-3.48-TH — ABOVE CPU

Z0903 STDOFF-4.50D.98H-1.1-3.48-TH — BELOW MCP

Z0904 STDOFF-4.50D.98H-1.1-3.48-TH — BELOW CPU

FAN STANDOFF

Z0905 STDOFF-4.50D.98H-1.1-3.48-TH
MIN_LINE_WIDTH=0.6MM
MIN_NECK_WIDTH=0.2MM
VOLTAGE=0V

MLB MOUNTING (TO C. BRACKET) SCREW HOLES

OMIT Z0906 3R2P5
OMIT Z0907 3R2P5

MLB MOUNTING (TO TOPCASE) SCREW HOLES

OMIT Z0908 3R2P5
OMIT Z0909 3R2P5
OMIT Z0910 3R2P5
OMIT Z0911 3R2P5
OMIT Z0912 3R2P5

EMI IO (SHORT) POGO PINS

ZS0900 1.4DIA-SHORT-EMI-MLB-K19-K24 SM
ZS0901 1.4DIA-SHORT-EMI-MLB-K19-K24 SM
ZS0902 1.4DIA-SHORT-EMI-MLB-K19-K24 SM
ZS0903 1.4DIA-SHORT-EMI-MLB-K19-K24 SM
ZS0908 1.4DIA-SHORT-EMI-MLB-K19-K24 SM
ZS0909 1.4DIA-SHORT-EMI-MLB-K19-K24 SM

EMI TALL POGO PINS

ZS0904 2.0DIA-TALL-EMI-MLB-M97-M98 SM
ZS0905 2.0DIA-TALL-EMI-MLB-M97-M98 SM
ZS0906 2.0DIA-TALL-EMI-MLB-M97-M98 SM
ZS0907 2.0DIA-TALL-EMI-MLB-M97-M98 SM

PCI-E ALIASES

UNUSED GPU LANES

15	=PEG D2R N<3:0>	NC_PEG_D2R_N<3:0>	NO_TEST=TRUE, MAKE_BASE=TRUE
15	=PEG D2R P<3:0>	NC_PEG_D2R_P<3:0>	NO_TEST=TRUE, MAKE_BASE=TRUE
15	=PEG R2D C N<3:0>	NC_PEG_R2D_C_N<3:0>	NO_TEST=TRUE, MAKE_BASE=TRUE
15	=PEG R2D C P<3:0>	NC_PEG_R2D_C_P<3:0>	NO_TEST=TRUE, MAKE_BASE=TRUE
74 15	PEG_CLK100M_P	TP_PEG_CLK100M_P	MAKE_BASE=TRUE
74 15	PEG_CLK100M_N	TP_PEG_CLK100M_N	MAKE_BASE=TRUE
15	PEG_CLKREQ_L	TP_PEG_CLKREQ_L	MAKE_BASE=TRUE

USB ALIASES

UNUSED USB PORTS

75 17	USB_EXTC_P	TP_USB_EXTCP	MAKE_BASE=TRUE
75 17	USB_EXTC_N	TP_USB_EXTCN	MAKE_BASE=TRUE
75 17	USB_EXTD_P	TP_USB_EXTDP	MAKE_BASE=TRUE
75 17	USB_EXTD_N	TP_USB_EXTDN	MAKE_BASE=TRUE
75 17	USB_WM_P	TP_USB_WMP	MAKE_BASE=TRUE
75 17	USB_WM_N	TP_USB_WMN	MAKE_BASE=TRUE
75 17	USB_MINI_P	TP_USB_MINIP	MAKE_BASE=TRUE
75 17	USB_MINI_N	TP_USB_MININ	MAKE_BASE=TRUE

ETHERNET ALIASES

PLACE_NEAR=U7980.A1:5MM

PP3V3_ENET_FET — R0911 0 5% 1/10W MF-LF 402 — =PP3V3_ENET_FET_R (OUT) 7
MIN_LINE_WIDTH=0.6 MM
MIN_NECK_WIDTH=0.2 MM
VOLTAGE=3.3V
MAKE_BASE=TRUE
66 =PP3V3_ENET_FET

ENET_RXD_PD (MAKE_BASE=TRUE)	ENET_RXD<0>	OUT	17 76
	ENET_RXD<1>	OUT	17 76
	ENET_RXD<2>	OUT	17 76
	ENET_RXD<3>	OUT	17 76
ENET_RXCLK_PD (MAKE_BASE=TRUE)	ENET_CLK125M_RXCLK	OUT	17 76
	ENET_RX_CTRL	OUT	17 76
	ENET_MDIO	BI	17 76
	MCP_RGMII_VREF	OUT	17
	ENET_LOW_PWR	OUT	18 31

R0980 10K 5% 1/16W MF-LF 402
R0981 10K 5% 1/16W MF-LF 402
R0982 10K 5% 1/16W MF-LF 402
R0983 10K 5% 1/16W MF-LF 402
R0984 10K 5% 1/16W MF-LF 402
NO STUFF R0986 10K 5% 1/16W MF-LF 402

DACS ALIASES

UNUSED CRT & TV-OUT INTERFACE

74	MCP_TV_DAC_RSET	NC_MCP_TV_DAC_RSET	NO_TEST=TRUE, MAKE_BASE=TRUE
74	MCP_TV_DAC_VREF	NC_MCP_TV_DAC_VREF	NO_TEST=TRUE, MAKE_BASE=TRUE
	MCP_CLK27M_XTALIN	NC_MCP_CLK27M_XTALIN	NO_TEST=TRUE, MAKE_BASE=TRUE
	MCP_CLK27M_XTALOUT	NC_MCP_CLK27M_XTALOUT	NO_TEST=TRUE, MAKE_BASE=TRUE
74	CRT_IG_R_C_PR	NC_CRT_IG_R_C_PR	NO_TEST=TRUE, MAKE_BASE=TRUE
74	CRT_IG_G_Y_Y	NC_CRT_IG_G_Y_Y	NO_TEST=TRUE, MAKE_BASE=TRUE
74	CRT_IG_B_COMP_PB	NC_CRT_IG_B_COMP_PB	NO_TEST=TRUE, MAKE_BASE=TRUE
74	CRT_IG_HSYNC	NC_CRT_IG_HSYNC	NO_TEST=TRUE, MAKE_BASE=TRUE
74	CRT_IG_VSYNC	NC_CRT_IG_VSYNC	NO_TEST=TRUE, MAKE_BASE=TRUE

LVDS ALIASES

16	=MCP_IFPA_TXC_P	LVDS_IG_A_CLK_P	67 74
16	=MCP_IFPA_TXC_N	LVDS_IG_A_CLK_N	MAKE_BASE=TRUE; 67 74
16	=MCP_IFPA_TXD_P<0..2>	LVDS_IG_A_DATA_P<0..2>	MAKE_BASE=TRUE; 6 67 74
16	=MCP_IFPA_TXD_N<0..2>	LVDS_IG_A_DATA_N<0..2>	MAKE_BASE=TRUE; 6 67 74
16	=MCP_IFPA_TXD_P<3>	NC_LVDS_IG_A_DATAP<3>	NO_TEST=TRUE
16	=MCP_IFPA_TXD_N<3>	NC_LVDS_IG_A_DATAN<3>	MAKE_BASE=TRUE; NO_TEST=TRUE
16	=MCP_IFPB_TXC_P	NC_LVDS_IG_B_CLKP	MAKE_BASE=TRUE; NO_TEST=TRUE
16	=MCP_IFPB_TXC_N	NC_LVDS_IG_B_CLKN	MAKE_BASE=TRUE; NO_TEST=TRUE
16	=MCP_IFPB_TXD_P<0..3>	NC_LVDS_IG_B_DATAP<0..3>	MAKE_BASE=TRUE; NO_TEST=TRUE
16	=MCP_IFPB_TXD_N<0..3>	NC_LVDS_IG_B_DATAN<0..3>	MAKE_BASE=TRUE; NO_TEST=TRUE
16	LCD_IG_BKLT_PWM	LCD_BKLT_PWM	70
16	LCD_IG_BKLT_EN	LCD_BKLT_EN	MAKE_BASE=TRUE; 71
16	=MCP_IFPAB_DDC_CLK	LVDS_DDC_CLK	MAKE_BASE=TRUE; 6 67
16	=MCP_IFPAB_DDC_DATA	LVDS_DDC_DATA	MAKE_BASE=TRUE; 6 67

DISPLAY PORT ALIASES

16	DP_IG_ML0_P<0..3> 74	DP_IG_ML_P<0..3> 74	DP_EXT_ML_P<0..3> MAKE_BASE=TRUE; 69 79
16	DP_IG_ML0_N<0..3> 74	DP_IG_ML_N<0..3> 74	DP_EXT_ML_N<0..3> MAKE_BASE=TRUE; 69 79
16	DP_IG_HPD0	DP_EXT_HPD	69
16	DP_IG_AUX_CH0_P	DP_IG_AUX_CH_P	MAKE_BASE=TRUE; 68 74
16	DP_IG_AUX_CH0_N	DP_IG_AUX_CH_N	MAKE_BASE=TRUE; 68 74
68	DP_AUX_CH_C_N	DP_EXT_AUX_CH_C_N	MAKE_BASE=TRUE; 69 79
68	DP_AUX_CH_C_P	DP_EXT_AUX_CH_C_P	MAKE_BASE=TRUE; 69 79
68	DP_CA_DET	DP_EXT_CA_DET	MAKE_BASE=TRUE; 69
16	DP_IG_ML1_P<0..3>	TP_DP_IG_ML1P<0..3>	MAKE_BASE=TRUE
16	DP_IG_ML1_N<0..3>	TP_DP_IG_ML1N<0..3>	MAKE_BASE=TRUE
16	DP_IG_AUX_CH1_P	TP_DP_IG_AUX_CH1P	MAKE_BASE=TRUE
16	DP_IG_AUX_CH1_N	TP_DP_IG_AUX_CH1N	MAKE_BASE=TRUE
16	DP_IG_HPD1	R0920 100K 5% 1/16W MF-LF 402	

AUDIO ALIASES

7	=PP1V5_S0_AUDIO_R (HDA:1.5V)	R0912 0 402 5% 1/16W MF-LF	PP3V3R1V5_S0_AUDIO (MAKE_BASE=TRUE, VOLTAGE=1.5V, MIN_LINE_WIDTH=0.6mm, MIN_NECK_WIDTH=0.2mm)
7	=PP3V3_S0_AUDIO_R (HDA:3.3V)	R0913 0 402 5% 1/16W MF-LF	=PP3V3R1V5_S0_AUDIO 51
7	=PP1V5_S0_MCP_HDA_R (HDA:1.5V)	R0914 0 402 5% 1/16W MF-LF	PP3V3R1V5_S0_MCP_HDA (MAKE_BASE=TRUE, VOLTAGE=1.5V, MIN_LINE_WIDTH=0.6mm, MIN_NECK_WIDTH=0.2mm)
7	=PP3V3_S0_MCP_HDA_R (HDA:3.3V)	R0915 0 402 5% 1/16W MF-LF	=PP3V3R1V5_S0_MCP_HDA 18 22

CPU ALIASES

72 9	CPU_BSEL<0:2> (MAKE_BASE=TRUE)	=MCP_BSEL<0:2>	13
13	CPU_PECI_MCP (MAKE_BASE=TRUE)	TP_CPU_PECI_MCP	

BSEL<2..0>	FSB MHZ
0 0 0	266
0 0 1	133
0 1 0	200
0 1 1	(166)
1 0 0	333
1 0 1	100
1 1 0	(400)
1 1 1	(RSVD)

MCP89 ALIASES

16	TP_MCP_RGB_RED	NC_MCP_RGB_RED	MAKE_BASE=TRUE, NO_TEST=TRUE
16	TP_MCP_RGB_GREEN	NC_MCP_RGB_GREEN	MAKE_BASE=TRUE, NO_TEST=TRUE
16	TP_MCP_RGB_BLUE	NC_MCP_RGB_BLUE	MAKE_BASE=TRUE, NO_TEST=TRUE
16	TP_MCP_RGB_HSYNC	NC_MCP_RGB_HSYNC	MAKE_BASE=TRUE, NO_TEST=TRUE
16	TP_MCP_RGB_VSYNC	NC_MCP_RGB_VSYNC	MAKE_BASE=TRUE, NO_TEST=TRUE
16	TP_MCP_RGB_DAC_RSET	NC_MCP_RGB_DAC_RSET	MAKE_BASE=TRUE, NO_TEST=TRUE
16	TP_MCP_RGB_DAC_VREF	NC_MCP_RGB_DAC_VREF	MAKE_BASE=TRUE, NO_TEST=TRUE

5V ODD ALIASES

6 PP5V_SW_ODD (MAKE_BASE=TRUE, MIN_LINE_WIDTH=0.6 MM, MIN_NECK_WIDTH=0.4 MM, VOLTAGE=5V) — =PP5V_SW_ODD 36
=PP5V_SW_ODD_FET 36

BACKLIGHT CONTROLLER ALIASES

71 70 PPBUS_SW_LCDBKLT_PWR — R0910 0 5% 1/10W MF-LF 402 — PPBUS_SW_BKL (PLACE_NEAR=L9701.1:5MM; MIN_LINE_WIDTH=0.5 MM, MIN_NECK_WIDTH=0.375 MM, VOLTAGE=12.6V, MAKE_BASE=TRUE)
=PPBUS_SW_BKL 70

CHARGER SIGNAL

58 =CHGR_ACOK (IN) — SMC_BC_ACOK (MAKE_BASE=TRUE) (OUT) 39 40 57

MCPCOREISNS SIGNAL

62	MCPCORES0_VO	MCPCOREISNS_N (MAKE_BASE=TRUE)	=MCPCOREISNS_N 44
62	MCPCORES0_ISP_R	MCPCOREISNS_P (MAKE_BASE=TRUE)	=MCPCOREISNS_P 44

SYNC_MASTER=K24_MLB

PAGE TITLE: SIGNAL ALIAS

Apple Inc.

DRAWING NUMBER: 051-8563 — SIZE: D
REVISION: A.13.0
BRANCH:
PAGE: 9 OF 109
SHEET: 8 OF 80

NOTICE OF PROPRIETARY PROPERTY:
THE INFORMATION CONTAINED HEREIN IS THE PROPRIETARY PROPERTY OF APPLE COMPUTER, INC.
THE POSESSOR AGREES TO THE FOLLOWING:
I TO MAINTAIN THIS DOCUMENT IN CONFIDENCE
II NOT TO REPRODUCE OR COPY IT
III NOT TO REVEAL OR PUBLISH IT IN WHOLE OR PART
IV ALL RIGHTS RESERVED

www.vinafix.vn

http://24hcongnghe.org

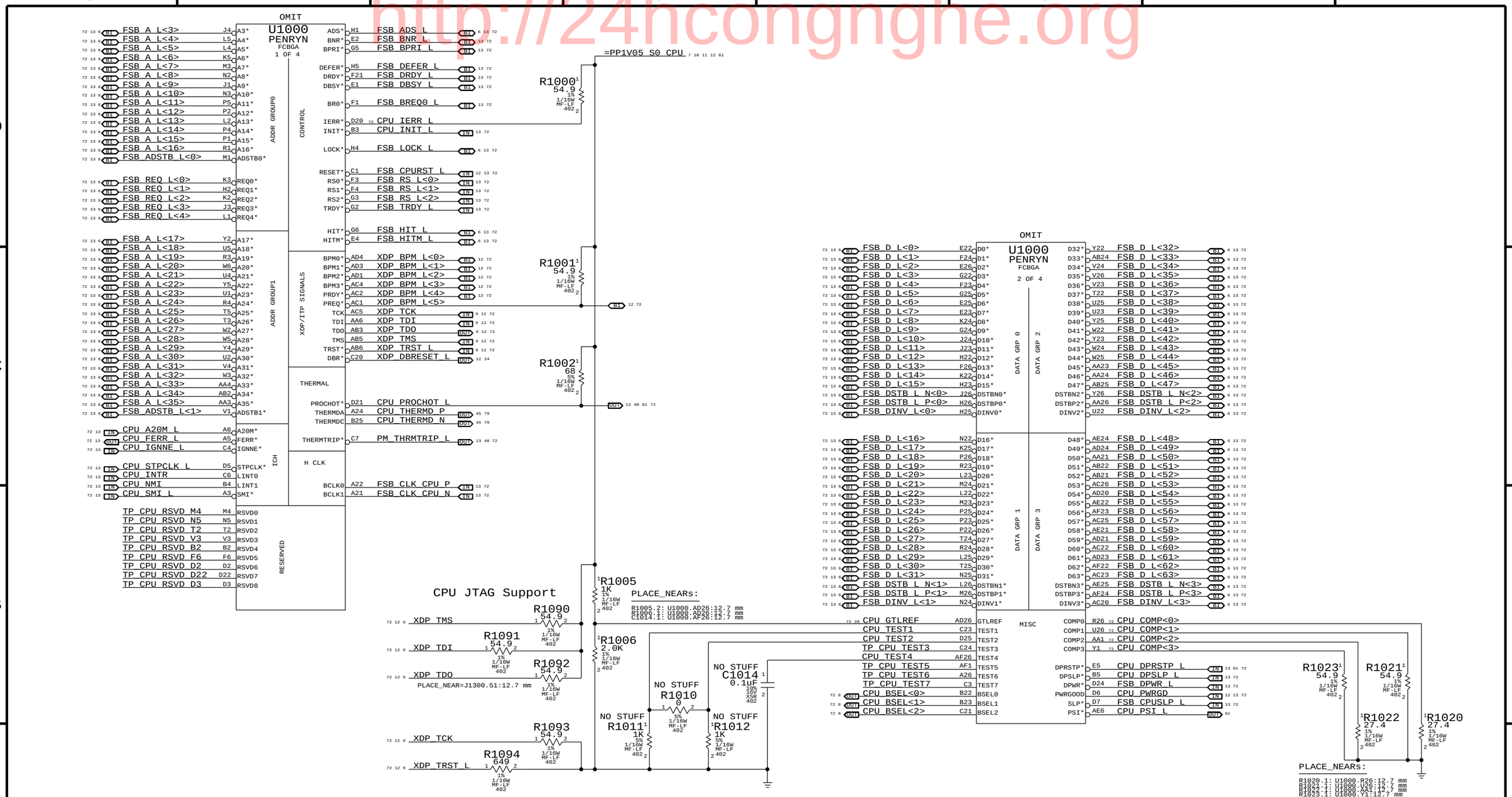

SYNC_MASTER=T27_MLB SYNC_DATE=08/27/2009

PAGE TITLE
CPU FSB

Apple Inc.

DRAWING NUMBER 051-8563 SIZE D

REVISION A.13.0

BRANCH

PAGE 10 OF 109

SHEET 9 OF 80

NOTICE OF PROPRIETARY PROPERTY:
THE INFORMATION CONTAINED HEREIN IS THE PROPRIETARY PROPERTY OF APPLE COMPUTER, INC.
THE POSESSOR AGREES TO THE FOLLOWING:
I TO MAINTAIN THIS DOCUMENT IN CONFIDENCE
II NOT TO REPRODUCE OR COPY IT
III NOT TO REVEAL OR PUBLISH IT IN WHOLE OR PART
IV ALL RIGHTS RESERVED

www.vinafix.vn

http://24hcongnghe.org

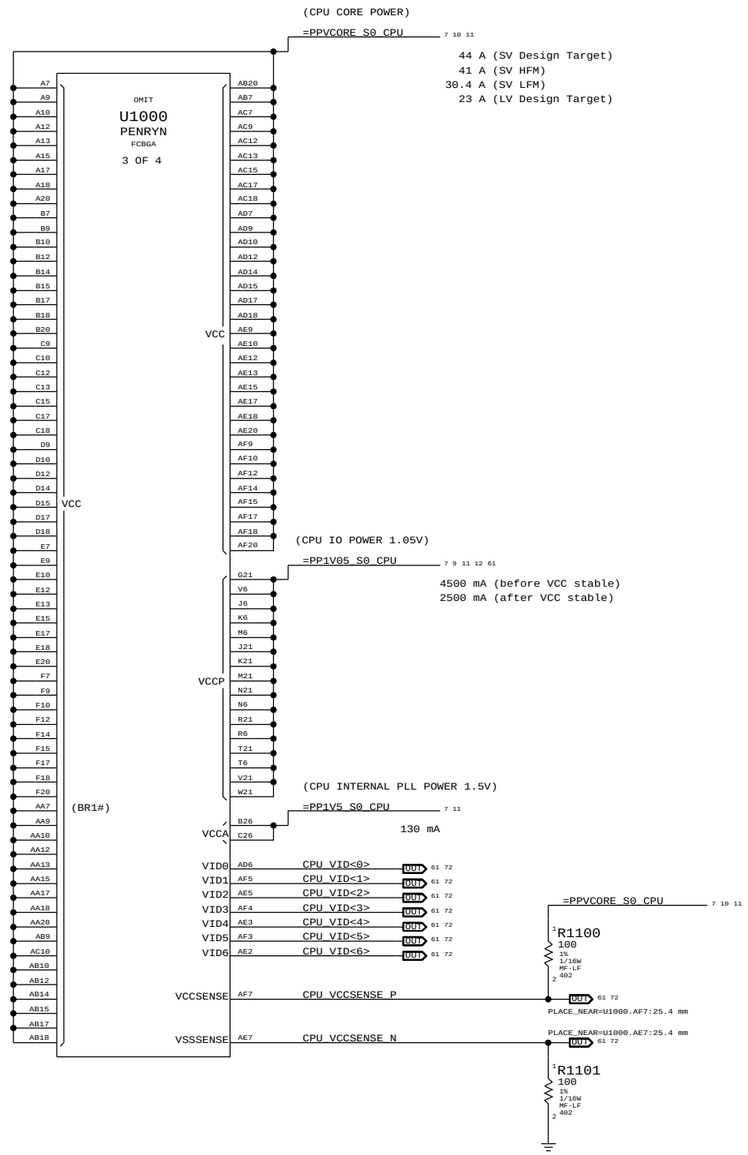

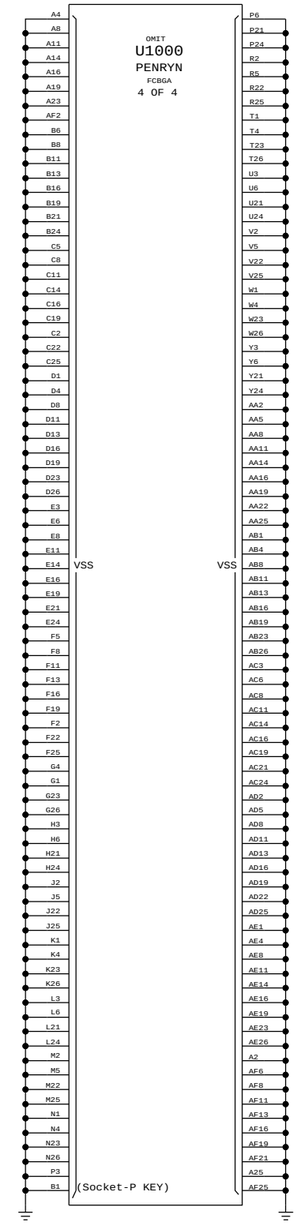

Current numbers from Merom for Santa Rosa EMTS, doc #20905.

SYNC MASTER=T27_MLB SYNC DATE=07/20/2006

PAGE TITLE

CPU Power & Ground

Apple Inc.

DRAWING NUMBER 051-8563 SIZE D

REVISION A.13.0

BRANCH

PAGE 11 OF 109

SHEET 10 OF 80

NOTICE OF PROPRIETARY PROPERTY:
THE INFORMATION CONTAINED HEREIN IS THE PROPRIETARY PROPERTY OF APPLE COMPUTER, INC.
THE POSESSOR AGREES TO THE FOLLOWING:
I TO MAINTAIN THIS DOCUMENT IN CONFIDENCE
II NOT TO REPRODUCE OR COPY IT
III NOT TO REVEAL OR PUBLISH IT IN WHOLE OR PART
IV ALL RIGHTS RESERVED

www.vinafix.vn

http://24hcongnghe.org

CPU VCore HF and Bulk Decoupling

4X 330UF. 20X 22UF 0805

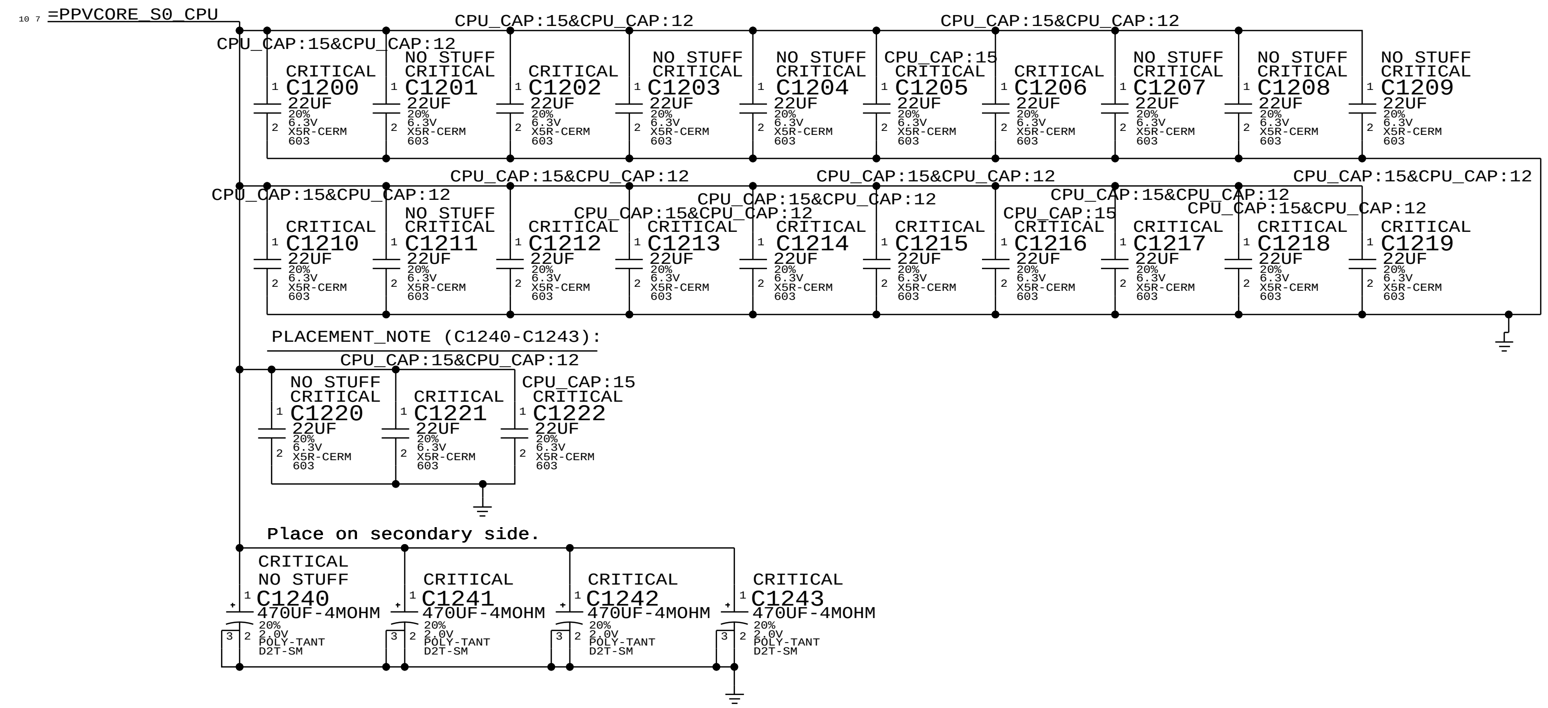

VCCA (CPU AVdd) DECOUPLING

1x 10uF, 1x 0.01uF

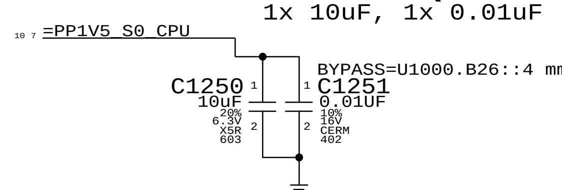

VCCP (CPU I/O) DECOUPLING

1x 330uF, 6x 0.1uF 0402

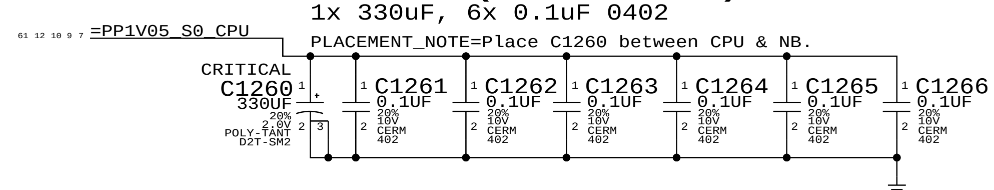

SYNC_MASTER=T27_MLB SYNC_DATE=11/23/2009

PAGE TITLE: CPU Decoupling

Apple Inc.

DRAWING NUMBER: 051-8563 SIZE: D

REVISION: A.13.0

BRANCH

NOTICE OF PROPRIETARY PROPERTY:
THE INFORMATION CONTAINED HEREIN IS THE PROPRIETARY PROPERTY OF APPLE COMPUTER, INC.
THE POSESSOR AGREES TO THE FOLLOWING:
I TO MAINTAIN THIS DOCUMENT IN CONFIDENCE
II NOT TO REPRODUCE OR COPY IT
III NOT TO REVEAL OR PUBLISH IT IN WHOLE OR PART
IV ALL RIGHTS RESERVED

www.vinafix.vn

http://24hcongnghe.org

Mini-XDP Connector

NOTE: This is not the standard XDP pinout.

Use with 920-0620 adapter board to support CPU, MCP debugging.

MCP89-specific pinout

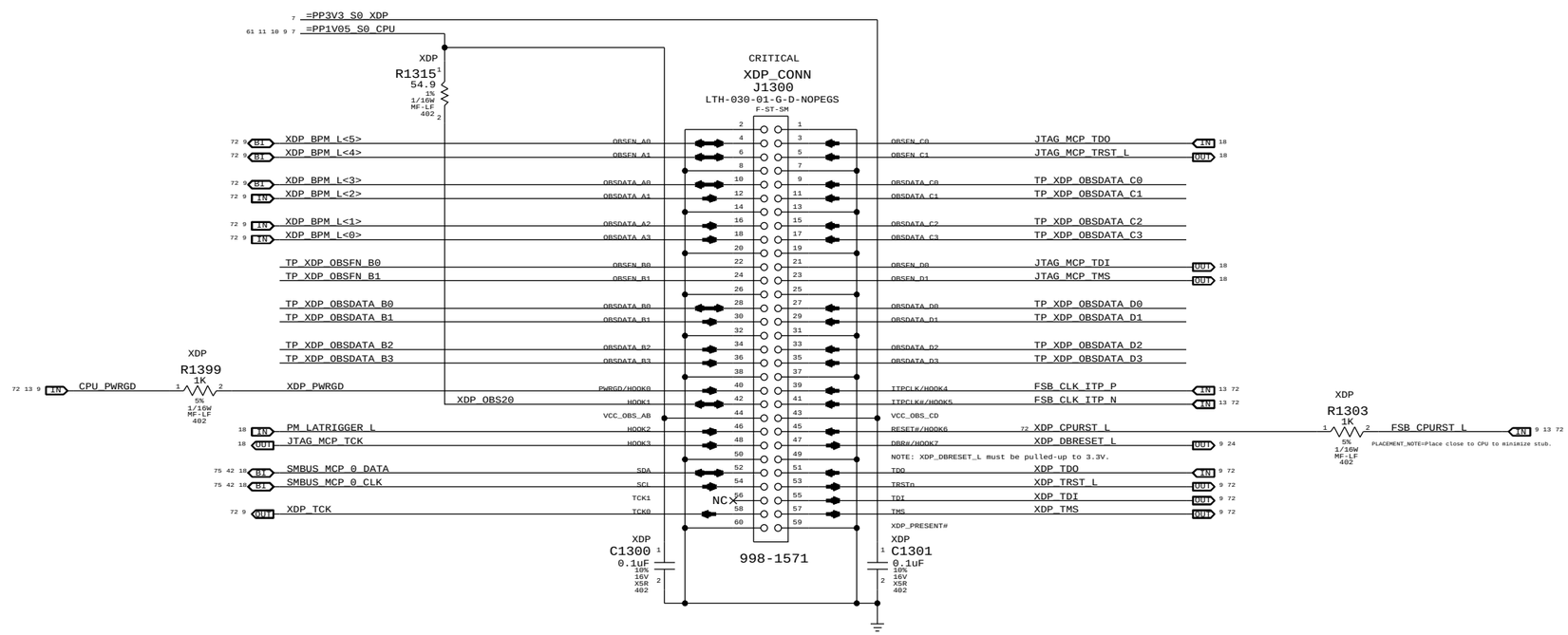

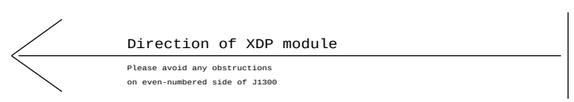

SYNC_MASTER=T27_MLB	SYNC_DATE=07/28/2009
PAGE TITLE: eXtended Debug Port (mini-XDP)	
Apple Inc.	DRAWING NUMBER: 051-8563 SIZE: D
	REVISION: A.13.0
	BRANCH
	PAGE: 13 OF 109
	SHEET: 12 OF 80

NOTICE OF PROPRIETARY PROPERTY:
THE INFORMATION CONTAINED HEREIN IS THE PROPRIETARY PROPERTY OF APPLE COMPUTER, INC.
THE POSESSOR AGREES TO THE FOLLOWING:
I TO MAINTAIN THIS DOCUMENT IN CONFIDENCE
II NOT TO REPRODUCE OR COPY IT
III NOT TO REVEAL OR PUBLISH IT IN WHOLE OR PART
IV ALL RIGHTS RESERVED

www.vinafix.vn

http://24hcongnghe.org

OMIT

U1400
MCP89M-A01
FBGA
(1 OF 11)

FSB

Signal	Pin	Pin	Signal
FSB_DSTB_L_P<0>	K34	CPU_DSTBP0*	
FSB_DSTB_L_N<0>	K35	CPU_DSTBN0*	
FSB_DINV_L<0>	L37	CPU_DBI0*	
FSB_DSTB_L_P<1>	T31	CPU_DSTBP1*	
FSB_DSTB_L_N<1>	T30	CPU_DSTBN1*	
FSB_DINV_L<1>	P28	CPU_DBI1*	
FSB_DSTB_L_P<2>	K33	CPU_DSTBP2*	
FSB_DSTB_L_N<2>	K32	CPU_DSTBN2*	
FSB_DINV_L<2>	N35	CPU_DBI2*	
FSB_DSTB_L_P<3>	C36	CPU_DSTBP3*	
FSB_DSTB_L_N<3>	D36	CPU_DSTBN3*	
FSB_DINV_L<3>	A35	CPU_DBI3*	
FSB_A_L<3>	U38	CPU_A3*	
FSB_A_L<4>	U34	CPU_A4*	
FSB_A_L<5>	U35	CPU_A5*	
FSB_A_L<6>	T34	CPU_A6*	
FSB_A_L<7>	W37	CPU_A7*	
FSB_A_L<8>	W38	CPU_A8*	
FSB_A_L<9>	T37	CPU_A9*	
FSB_A_L<10>	Y38	CPU_A10*	
FSB_A_L<11>	W35	CPU_A11*	
FSB_A_L<12>	Y36	CPU_A12*	
FSB_A_L<13>	U33	CPU_A13*	
FSB_A_L<14>	W34	CPU_A14*	
FSB_A_L<15>	Y37	CPU_A15*	
FSB_A_L<16>	Y35	CPU_A16*	
FSB_A_L<17>	AF38	CPU_A17*	
FSB_A_L<18>	AB35	CPU_A18*	
FSB_A_L<19>	Y34	CPU_A19*	
FSB_A_L<20>	AE38	CPU_A20*	
FSB_A_L<21>	AC36	CPU_A21*	
FSB_A_L<22>	AF36	CPU_A22*	
FSB_A_L<23>	AC38	CPU_A23*	
FSB_A_L<24>	AB36	CPU_A24*	
FSB_A_L<25>	AB38	CPU_A25*	
FSB_A_L<26>	AB37	CPU_A26*	
FSB_A_L<27>	AC34	CPU_A27*	
FSB_A_L<28>	AE36	CPU_A28*	
FSB_A_L<29>	AF37	CPU_A29*	
FSB_A_L<30>	AC37	CPU_A30*	
FSB_A_L<31>	AC35	CPU_A31*	
FSB_A_L<32>	AE37	CPU_A32*	
FSB_A_L<33>	AE35	CPU_A33*	
FSB_A_L<34>	AE33	CPU_A34*	
FSB_A_L<35>	AE34	CPU_A35*	
FSB_ADSTB_L<0>	W36	CPU_ADSTB0*	
FSB_ADSTB_L<1>	AB34	CPU_ADSTB1*	
FSB_REQ_L<0>	U36	CPU_REQ0*	
FSB_REQ_L<1>	T36	CPU_REQ1*	
FSB_REQ_L<2>	U37	CPU_REQ2*	
FSB_REQ_L<3>	T38	CPU_REQ3*	
FSB_REQ_L<4>	T35	CPU_REQ4*	
FSB_ADS_L	AE31	CPU_ADS*	
FSB_BNR_L	AE32	CPU_BNR*	
FSB_BREQ0_L	AE30	CPU_BR0*	
FSB_DBSY_L	AE29	CPU_DBSY*	
FSB_DRDY_L	U29	CPU_DRDY*	
FSB_HIT_L	W32	CPU_HIT*	
FSB_HITM_L	AB31	CPU_HITM*	
FSB_LOCK_L	AC32	CPU_LOCK*	
FSB_TRDY_L	AC29	CPU_TRDY*	
CPU_PECI_MCP	AH34	CPU_PECI	
CPU_PROCHOT_L	U28	CPU_PROCHOT*	
PM_THRMTRIP_L	W33	CPU_THERMTRIP*	
CPU_FERR_L	AB32	CPU_FERR*	
=MCP_BSEL<2>	B34	CPU_BSEL2	
=MCP_BSEL<1>	C34	CPU_BSEL1	
=MCP_BSEL<0>	A34	CPU_BSEL0	
FSB_RS_L<0>	AB29	CPU_RS0*	
FSB_RS_L<1>	AC33	CPU_RS1*	
FSB_RS_L<2>	AC31	CPU_RS2*	
MCP_BCLK_VML_COMP_VDD	AH37	BCLK_VML_COMP_VDD	
MCP_BCLK_VML_COMP_GND	AH38	BCLK_VML_COMP_GND	
MCP_CPU_COMP_VCC	AH36	CPU_COMP_VCC	
MCP_CPU_COMP_GND	AH35	CPU_COMP_GND	
CPU_D0*	N38	FSB_D_L<0>	
CPU_D1*	N36	FSB_D_L<1>	
CPU_D2*	P36	FSB_D_L<2>	
CPU_D3*	L36	FSB_D_L<3>	
CPU_D4*	N34	FSB_D_L<4>	
CPU_D5*	L35	FSB_D_L<5>	
CPU_D6*	P37	FSB_D_L<6>	
CPU_D7*	P38	FSB_D_L<7>	
CPU_D8*	H36	FSB_D_L<8>	
CPU_D9*	L34	FSB_D_L<9>	
CPU_D10*	K37	FSB_D_L<10>	
CPU_D11*	K36	FSB_D_L<11>	
CPU_D12*	K38	FSB_D_L<12>	
CPU_D13*	N37	FSB_D_L<13>	
CPU_D14*	H37	FSB_D_L<14>	
CPU_D15*	L38	FSB_D_L<15>	
CPU_D16*	N28	FSB_D_L<16>	
CPU_D17*	U30	FSB_D_L<17>	
CPU_D18*	N29	FSB_D_L<18>	
CPU_D19*	P34	FSB_D_L<19>	
CPU_D20*	T29	FSB_D_L<20>	
CPU_D21*	T32	FSB_D_L<21>	
CPU_D22*	U32	FSB_D_L<22>	
CPU_D23*	T33	FSB_D_L<23>	
CPU_D24*	P31	FSB_D_L<24>	
CPU_D25*	P30	FSB_D_L<25>	
CPU_D26*	N30	FSB_D_L<26>	
CPU_D27*	P33	FSB_D_L<27>	
CPU_D28*	N31	FSB_D_L<28>	
CPU_D29*	T28	FSB_D_L<29>	
CPU_D30*	P35	FSB_D_L<30>	
CPU_D31*	P29	FSB_D_L<31>	
CPU_D32*	H33	FSB_D_L<32>	
CPU_D33*	G34	FSB_D_L<33>	
CPU_D34*	L30	FSB_D_L<34>	
CPU_D35*	L31	FSB_D_L<35>	
CPU_D36*	L33	FSB_D_L<36>	
CPU_D37*	P32	FSB_D_L<37>	
CPU_D38*	N32	FSB_D_L<38>	
CPU_D39*	N33	FSB_D_L<39>	
CPU_D40*	H35	FSB_D_L<40>	
CPU_D41*	K31	FSB_D_L<41>	
CPU_D42*	H34	FSB_D_L<42>	
CPU_D43*	K30	FSB_D_L<43>	
CPU_D44*	L32	FSB_D_L<44>	
CPU_D45*	G33	FSB_D_L<45>	
CPU_D46*	H32	FSB_D_L<46>	
CPU_D47*	G35	FSB_D_L<47>	
CPU_D48*	C37	FSB_D_L<48>	
CPU_D49*	D37	FSB_D_L<49>	
CPU_D50*	H38	FSB_D_L<50>	
CPU_D51*	G38	FSB_D_L<51>	
CPU_D52*	G37	FSB_D_L<52>	
CPU_D53*	G36	FSB_D_L<53>	
CPU_D54*	B35	FSB_D_L<54>	
CPU_D55*	E35	FSB_D_L<55>	
CPU_D56*	B36	FSB_D_L<56>	
CPU_D57*	E36	FSB_D_L<57>	
CPU_D58*	C35	FSB_D_L<58>	
CPU_D59*	D34	FSB_D_L<59>	
CPU_D60*	E38	FSB_D_L<60>	
CPU_D61*	D38	FSB_D_L<61>	
CPU_D62*	E34	FSB_D_L<62>	
CPU_D63*	E37	FSB_D_L<63>	
CPU_BPRI*	Y31	FSB_BPRI_L	
CPU_DEFER*	Y30	FSB_DEFER_L	
BCLK_OUT_CPU_N	AF32	FSB_CLK_CPU_N	
BCLK_OUT_CPU_P	AF33	FSB_CLK_CPU_P	
BCLK_OUT_ITP_N	AF35	FSB_CLK_ITP_N	
BCLK_OUT_ITP_P	AF34	FSB_CLK_ITP_P	
BCLK_OUT_NB_N	AF28	FSB_CLK_MCP_N	
BCLK_OUT_NB_P	AF29	FSB_CLK_MCP_P	
BCLK_IN_P	AF30		
BCLK_IN_N	AF31		
CPU_A20M*	W30	CPU_A20M_L	
CPU_IGNNE*	AB30	CPU_IGNNE_L	
CPU_INIT*	AB28	CPU_INIT_L	
CPU_INTR	W31	CPU_INTR	
CPU_NMI	AC30	CPU_NMI	
CPU_SMI*	AC28	CPU_SMI_L	
CPU_PWRGD	Y32	CPU_PWRGD	
CPU_RESET*	AE28	FSB_CPURST_L	
CPU_DPRSLPVR	G1	PM_DPRSLPVR	
CPU_SLP*	Y33	FSB_CPUSLP_L	
CPU_DPSLP*	AB33	CPU_DPSLP_L	
CPU_DPWR*	U31	FSB_DPWR_L	
CPU_STPCLK*	Y29	CPU_STPCLK_L	
CPU_DPRSTP*	W29	CPU_DPRSTP_L	

Loop-back clock for delay matching.

=PP1V05_S0_MCP_FSB

R1410[1] 54.9 1% 1/16W MF-LF 402

[1]R1415 62 5% 1/16W MF-LF 402

R1430[1] 49.9 1% 1/16W MF-LF 402

[1]R1435 49.9 1% 1/16W MF-LF 402

R1431[1] 49.9 1% 1/16W MF-LF 402

[1]R1436 49.9 1% 1/16W MF-LF 402

=PP1V05_S0_MCP_FSB

NO STUFF
[1]R1440 150 5% 1/16W MF-LF 402

SYNC_MASTER=T27_MLB SYNC_DATE=11/05/2009

PAGE TITLE
MCP CPU Interface

Apple Inc.

DRAWING NUMBER 051-8563 SIZE D
REVISION A.13.0
BRANCH
PAGE 14 OF 109
SHEET 13 OF 80

NOTICE OF PROPRIETARY PROPERTY:
THE INFORMATION CONTAINED HEREIN IS THE PROPRIETARY PROPERTY OF APPLE COMPUTER, INC.
THE POSESSOR AGREES TO THE FOLLOWING:
I TO MAINTAIN THIS DOCUMENT IN CONFIDENCE
II NOT TO REPRODUCE OR COPY IT
III NOT TO REVEAL OR PUBLISH IT IN WHOLE OR PART
IV ALL RIGHTS RESERVED

www.vinafix.vn

http://24hcongnghe.org

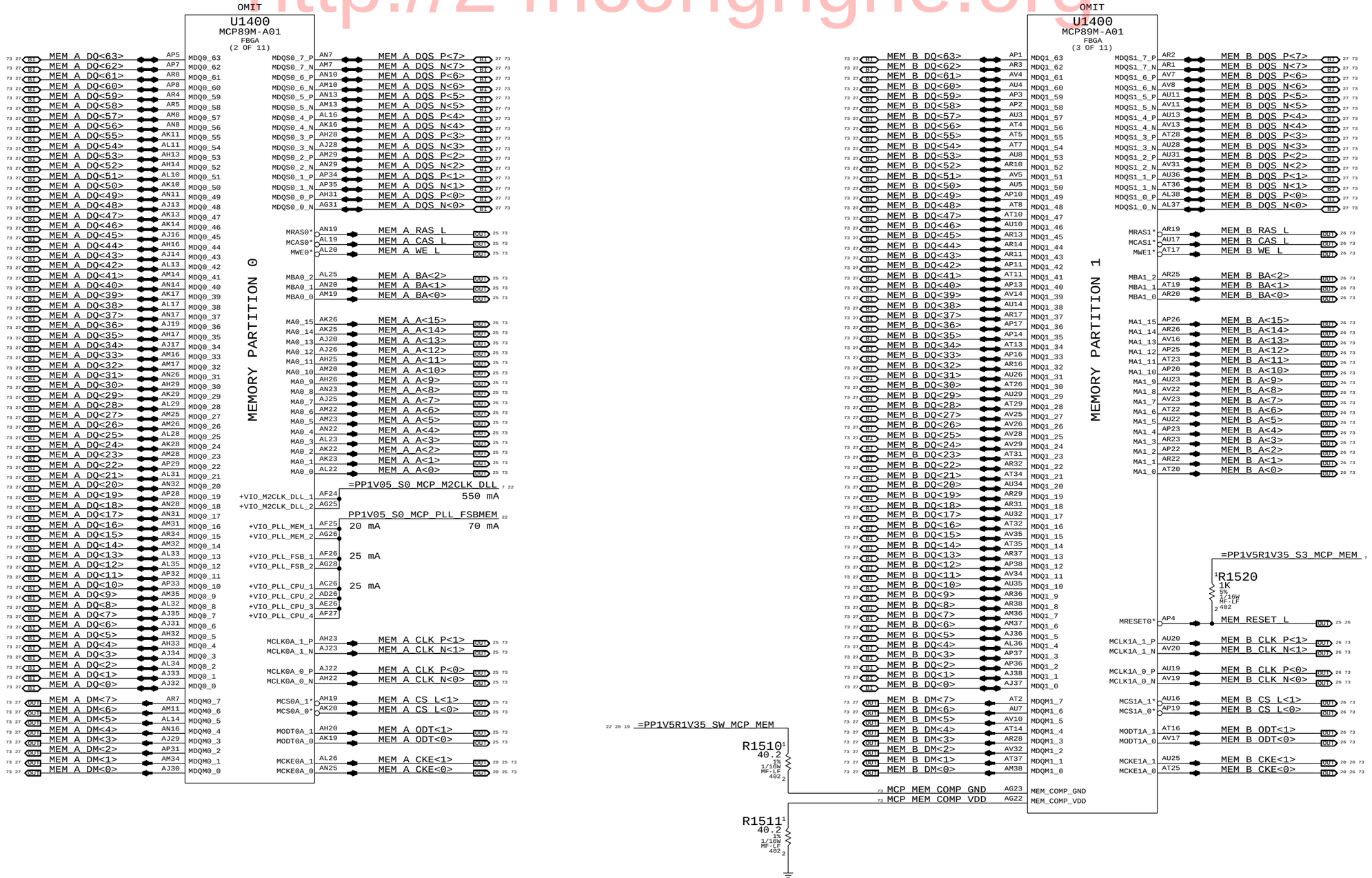

Current numbers from MCP89 A01 Bring-Up Support document (MCP80_TDP_EDP_Bringup_Targets_Apple.pdf, dated August 5, 2009). K6/K69 EDP currents used.

SYNC_MASTER=T27_MLB SYNC_DATE=08/06/2009

PAGE TITLE
MCP Memory Interface

Apple Inc.

DRAWING NUMBER 051-8563 SIZE D

REVISION A.13.0

BRANCH

PAGE 15 OF 109

SHEET 14 OF 80

NOTICE OF PROPRIETARY PROPERTY:
THE INFORMATION CONTAINED HEREIN IS THE PROPRIETARY PROPERTY OF APPLE COMPUTER, INC.
THE POSESSOR AGREES TO THE FOLLOWING:
I TO MAINTAIN THIS DOCUMENT IN CONFIDENCE
II NOT TO REPRODUCE OR COPY IT
III NOT TO REVEAL OR PUBLISH IT IN WHOLE OR PART
IV ALL RIGHTS RESERVED

www.vinafix.vn

http://24hcongnghe.org

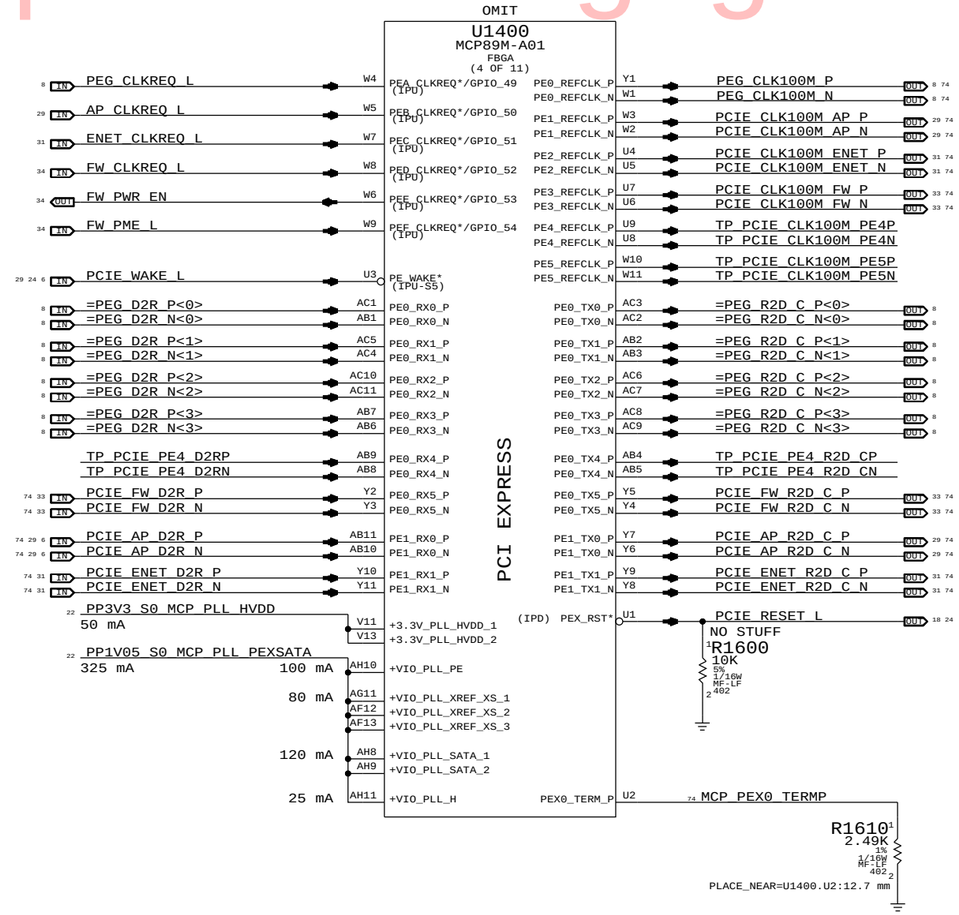

PE0 ports are Gen2-capable. 4 RCs: 4x, x2, x1, x1
PE1 ports are Gen1-only. 2 RCs: x1, x1

If PE0[3:0] are not used,
+VIO_PE_AVDD0 and +VIO_PE_DVDD0 can be GND

If PE0[4:5] and PE1[0:1] are not used,
+VIO_PE_AVDD1 and +VIO_PE_DVDD1 can be GND

Current numbers from MCP89 A01 Bring-Up Support document (MCP89_TDP_EDP_Bringup_Targets_Apple.pdf, dated August 5, 2009). K6/K69 EDP currents used.

SYNC MASTER=T27 MLB SYNC DATE=11/05/2009

PAGE TITLE
MCP PCIe Interfaces

Apple Inc.

DRAWING NUMBER 051-8563 SIZE D
REVISION A.13.0
BRANCH
PAGE 16 OF 109
SHEET 15 OF 80

NOTICE OF PROPRIETARY PROPERTY:
THE INFORMATION CONTAINED HEREIN IS THE PROPRIETARY PROPERTY OF APPLE COMPUTER, INC.
THE POSESSOR AGREES TO THE FOLLOWING:
I TO MAINTAIN THIS DOCUMENT IN CONFIDENCE
II NOT TO REPRODUCE OR COPY IT
III NOT TO REVEAL OR PUBLISH IT IN WHOLE OR PART
IV ALL RIGHTS RESERVED

www.vinafix.vn

http://24hcongnghe.org

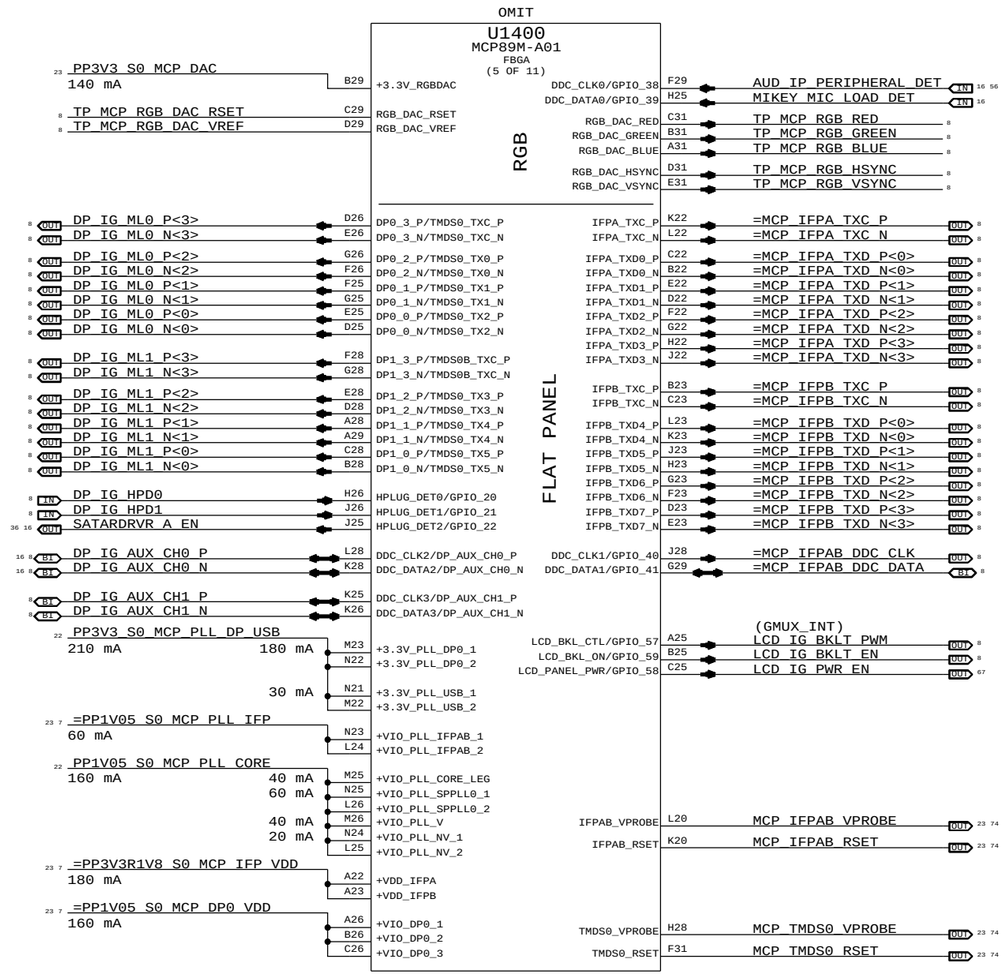

RGB DAC Disable:

Okay to float all RGB_DAC signals.
DDC_CLK0/DDC_DATA0 pull-ups still required (or use as GPIOs).
Connect +3.3V_RGBDAC pin to GND.

NOTE: No Composite/S-Video/Component Video support on MCP89

Interface Mode

MCP Signal	TMDS/HDMI	LVDS
=MCP_IFPA_TXC_P/N	TMDS_IG_TXC_P/N	LVDS_IG_A_CLK_P/N
=MCP_IFPA_TXD_P/N<0>	TMDS_IG_TXD_P/N<0>	LVDS_IG_A_DATA_P/N<0>
=MCP_IFPA_TXD_P/N<1>	TMDS_IG_TXD_P/N<1>	LVDS_IG_A_DATA_P/N<1>
=MCP_IFPA_TXD_P/N<2>	TMDS_IG_TXD_P/N<2>	LVDS_IG_A_DATA_P/N<2>
=MCP_IFPA_TXD_P/N<3>	(UNUSED)	LVDS_IG_A_DATA_P/N<3>
=MCP_IFPB_TXC_P/N	(UNUSED)	LVDS_IG_B_CLK_P/N
=MCP_IFPB_TXD_P/N<0>	TMDS_IG_TXD_P/N<3>	LVDS_IG_B_DATA_P/N<0>
=MCP_IFPB_TXD_P/N<1>	TMDS_IG_TXD_P/N<4>	LVDS_IG_B_DATA_P/N<1>
=MCP_IFPB_TXD_P/N<2>	TMDS_IG_TXD_P/N<5>	LVDS_IG_B_DATA_P/N<2>
=MCP_IFPB_TXD_P/N<3>	(UNUSED)	LVDS_IG_B_DATA_P/N<3>
=MCP_IFPAB_DDC_CLK	TMDS_IG_DDC_CLK	LVDS_IG_DDC_CLK
=MCP_IFPAB_DDC_DATA	TMDS_IG_DDC_DATA	LVDS_IG_DDC_DATA

LVDS: Power +VDD_IFPx at 1.8V
TMDS: Power +VDD_IFPx at 3.3V

NOTE: 100K pull-downs required if
HPLUG_DET0/HPLUG_DET1 are not used.

DDC Mode Pull-downs

NOTE: DP_AUX_CH1 also requires pull-downs if used for dual-mode DisplayPort (DP++). If unused no pulls are necessary, if used for TMDS/HDMI only then only pull-ups are necessary.

R1710 100K 5% 1/16W MF-LF 402 — DP_IG_AUX_CH0_P
R1711 100K 5% 1/16W MF-LF 402 — DP_IG_AUX_CH0_N

GPIO Pull-Ups

=PP3V3_S0_MCP_GPIO

R1780 10K 5% 1/16W MF-LF 402 — SATARDRVR_A_EN
R1781 10K 5% 1/16W MF-LF 402 — AUD_IP_PERIPHERAL_DET
R1782 10K 5% 1/16W MF-LF 402 — MIKEY_MIC_LOAD_DET

Current numbers from MCP89 A01 Bring-Up Support document (MCP89_TDP_EDP_Bringup_Targets_Apple.pdf, dated August 5, 2009). K6/K69 EDP currents used.

SYNC_MASTER=T27_MLB SYNC_DATE=11/05/2009

PAGE TITLE: MCP Graphics

Apple Inc.

DRAWING NUMBER: 051-8563 SIZE: D
REVISION: A.13.0
BRANCH:
PAGE: 17 OF 109
SHEET: 16 OF 80

NOTICE OF PROPRIETARY PROPERTY:
THE INFORMATION CONTAINED HEREIN IS THE PROPRIETARY PROPERTY OF APPLE COMPUTER, INC.
THE POSESSOR AGREES TO THE FOLLOWING:
I TO MAINTAIN THIS DOCUMENT IN CONFIDENCE
II NOT TO REPRODUCE OR COPY IT
III NOT TO REVEAL OR PUBLISH IT IN WHOLE OR PART
IV ALL RIGHTS RESERVED

www.vinafix.vn

http://24hcongnghe.org

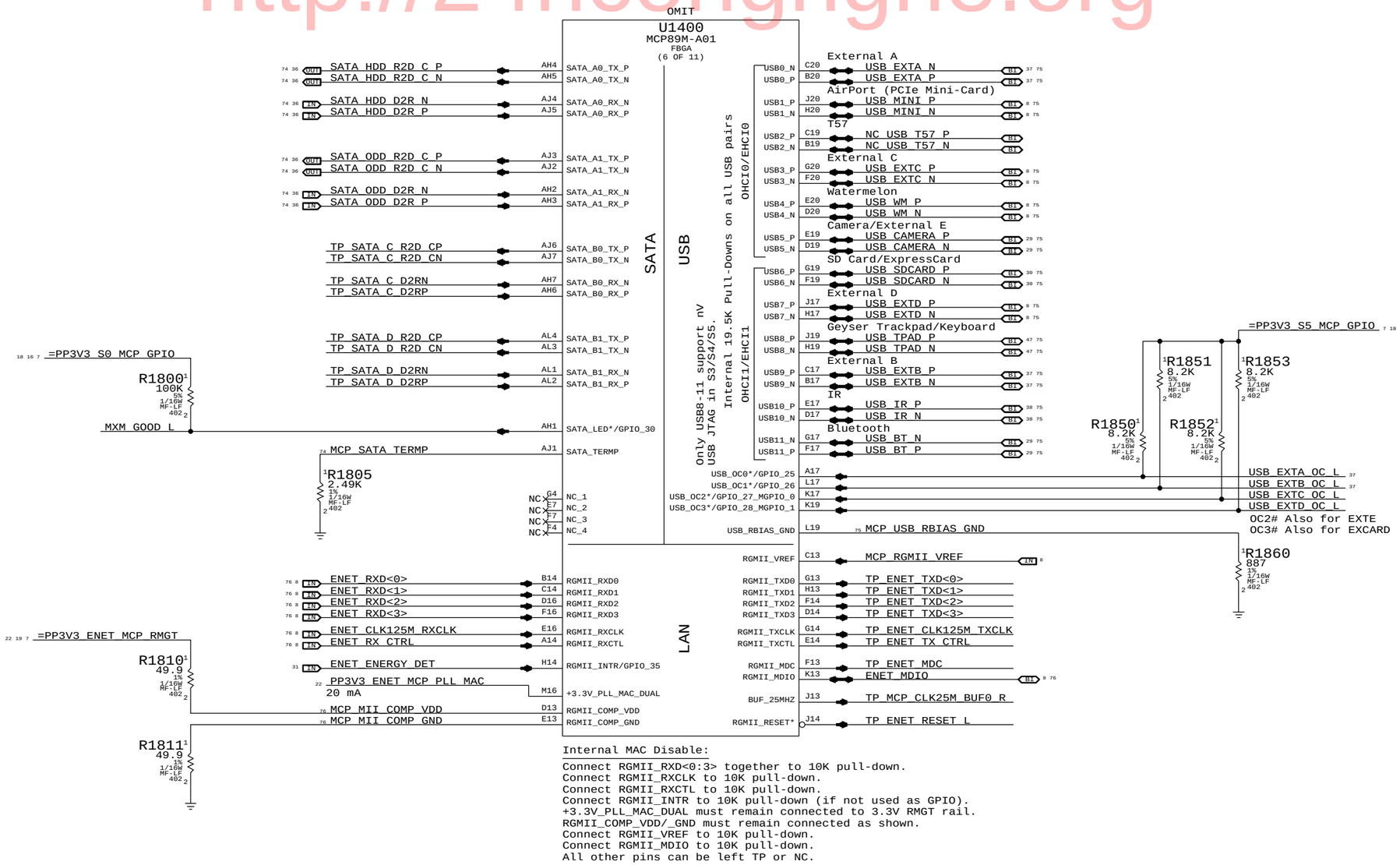

Internal MAC Disable:

Connect RGMII_RXD<0:3> together to 10K pull-down.
Connect RGMII_RXCLK to 10K pull-down.
Connect RGMII_RXCTL to 10K pull-down.
Connect RGMII_INTR to 10K pull-down (if not used as GPIO).
+3.3V_PLL_MAC_DUAL must remain connected to 3.3V RMGT rail.
RGMII_COMP_VDD/_GND must remain connected as shown.
Connect RGMII_VREF to 10K pull-down.
Connect RGMII_MDIO to 10K pull-down.
All other pins can be left TP or NC.

Current numbers from MCP89 A01 Bring-Up Support document (MCP89_TDP_EDP_Bringup_Targets_Apple.pdf, dated August 5, 2009). K6/K69 EDP currents used.

SYNC_MASTER=T27_MLB SYNC_DATE=11/23/2009

PAGE TITLE
MCP SATA, USB & Ethernet

Apple Inc.

DRAWING NUMBER 051-8563 SIZE D
REVISION A.13.0
BRANCH
PAGE 18 OF 109
SHEET 17 OF 80

NOTICE OF PROPRIETARY PROPERTY:
THE INFORMATION CONTAINED HEREIN IS THE PROPRIETARY PROPERTY OF APPLE COMPUTER, INC.
THE POSESSOR AGREES TO THE FOLLOWING:
I TO MAINTAIN THIS DOCUMENT IN CONFIDENCE
II NOT TO REPRODUCE OR COPY IT
III NOT TO REVEAL OR PUBLISH IT IN WHOLE OR PART
IV ALL RIGHTS RESERVED

www.vinafix.vn

http://24hcongnghe.org

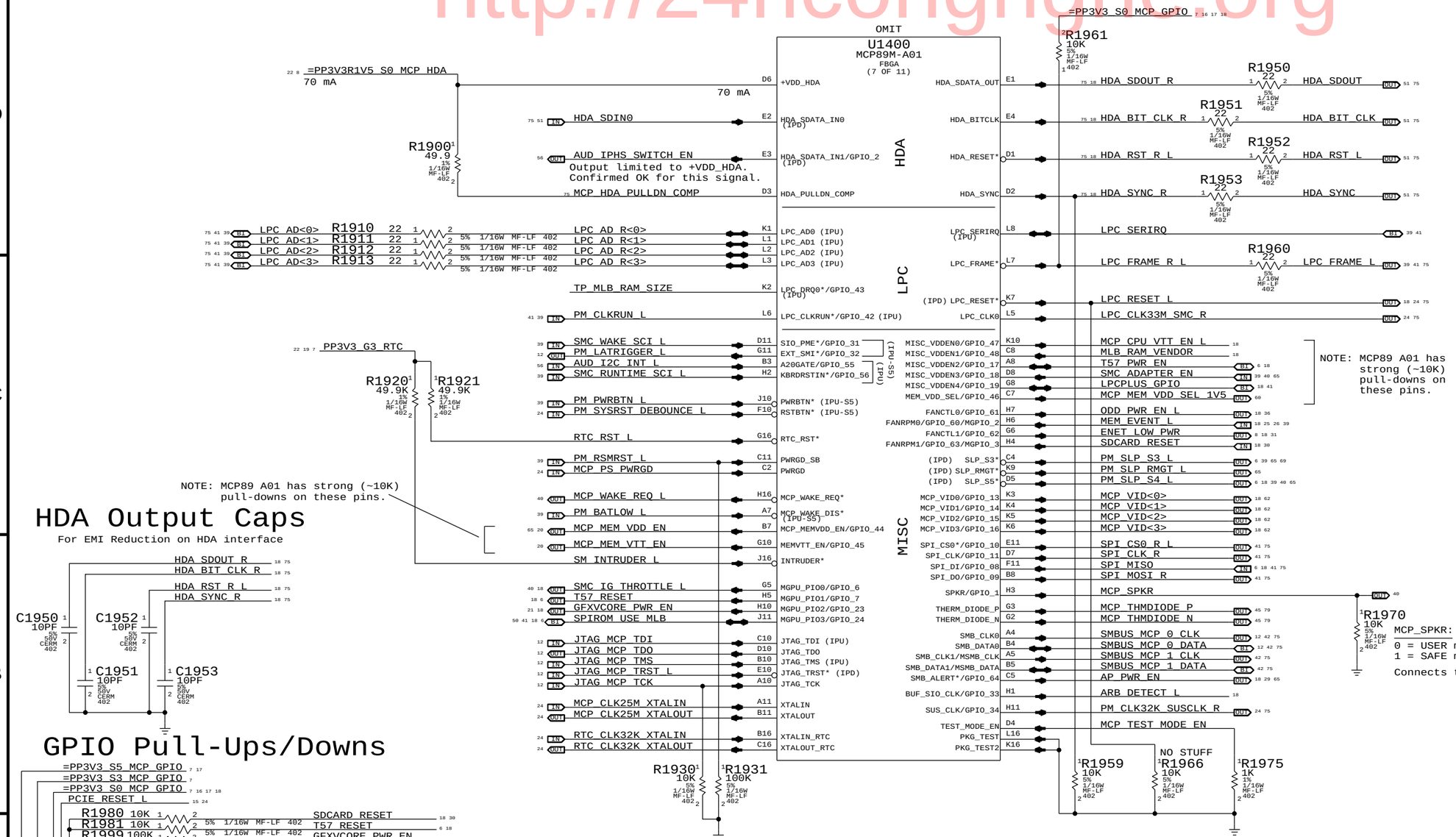

HDA Output Caps

For EMI Reduction on HDA interface

GPIO Pull-Ups/Downs

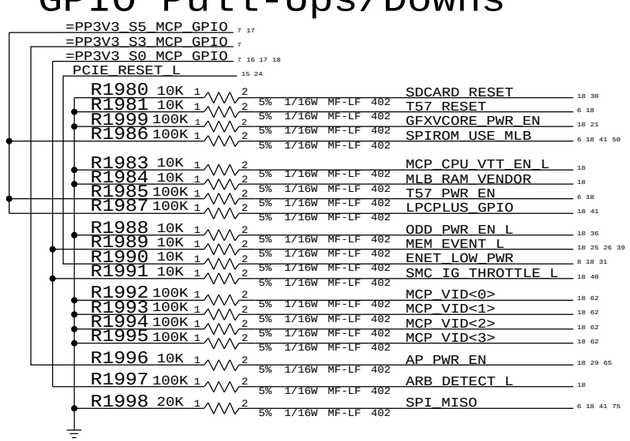

Platform-Specific Connections

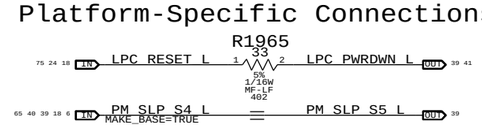

NOTE: MCP SLP_S5# signal has the behavior of Intel's SLP_S4# signal.

BUF_SIO_CLK Frequency

Frequency	HDA_SYNC
24 MHz	1
14.31818 MHz	0

BIOS Boot Select

I/F	LPC_FRAME#
LPC	0
SPI	1

NOTE: MCP89 does not support FWH, only LPC ROMs. So Apple designs will not use LPC for BootROM override.

SPI Frequency Select

Frequency	SPI_DO	SPI_CLK
25.0 MHz	0	0
31.2 MHz	0	1
42.7 MHz	1	0
62.5 MHz	1	1

NOTE: 42 & 62 MHz use FAST_READ command. Straps not provided on this page.

Current numbers from MCP89 A01 Bring-Up Support document (MCP89_TDP_EDP_Bringup_Targets_Apple.pdf, dated August 5, 2009). K6/K69 EDP currents used.

SYNC MASTER=T27 MLB SYNC DATE=11/23/2009

PAGE TITLE: MCP HDA, LPC & MISC

Apple Inc.

DRAWING NUMBER: 051-8563 SIZE: D

REVISION: A.13.0

BRANCH

PAGE: 19 OF 109

SHEET: 18 OF 80

NOTICE OF PROPRIETARY PROPERTY:
THE INFORMATION CONTAINED HEREIN IS THE PROPRIETARY PROPERTY OF APPLE COMPUTER, INC.
THE POSESSOR AGREES TO THE FOLLOWING:
I TO MAINTAIN THIS DOCUMENT IN CONFIDENCE
II NOT TO REPRODUCE OR COPY IT
III NOT TO REVEAL OR PUBLISH IT IN WHOLE OR PART
IV ALL RIGHTS RESERVED

www.vinafix.vn

http://24hconganghe.org

NOTE: "SW" rails are dynamically switched in the S0 state as needed, controlled by MCP89 GPIOs.

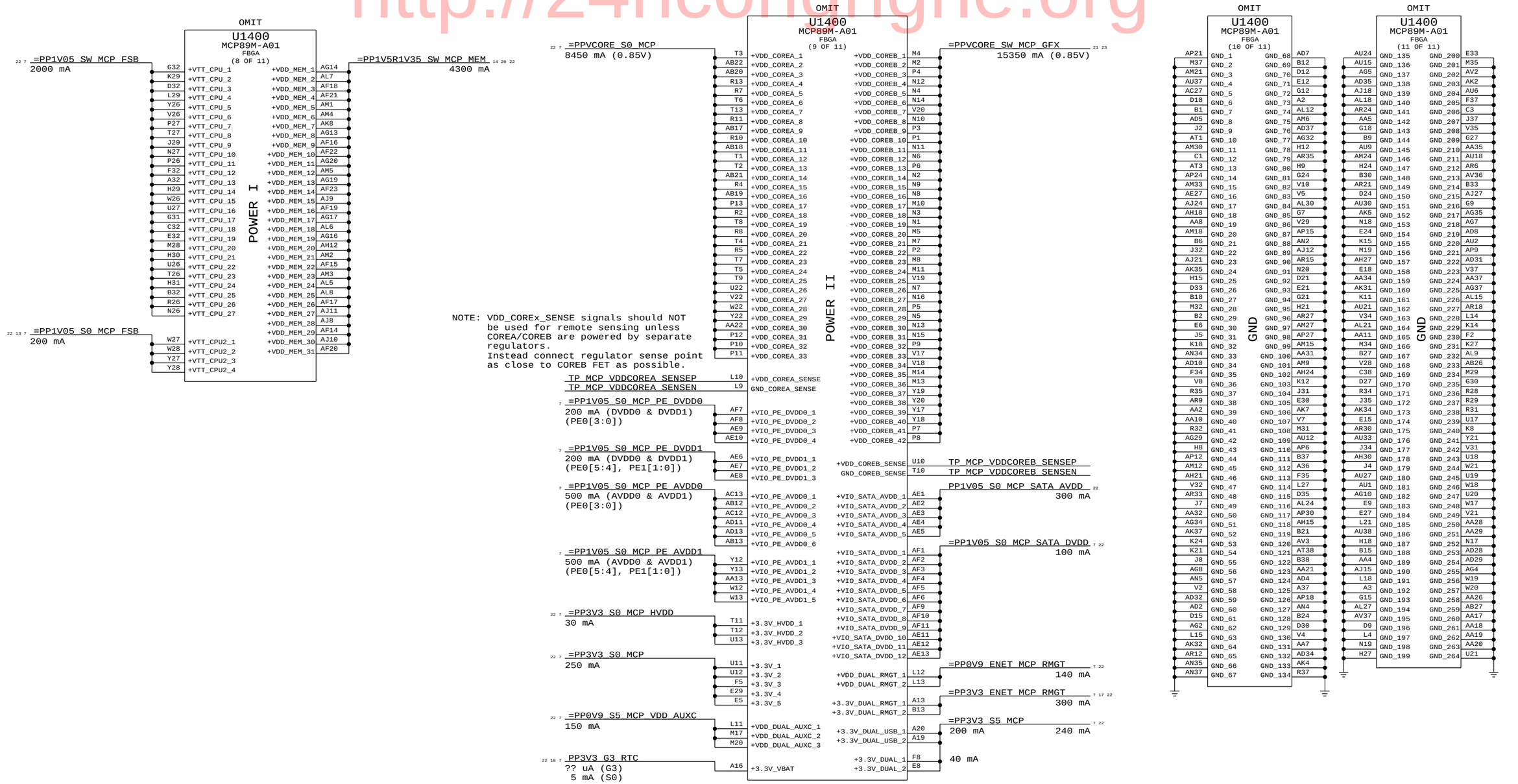

Current numbers from MCP89 A01 Bring-Up Support document (MCP80_TDP_EDP_Bringup_Targets_Apple.pdf, dated August 5, 2009). K6/K69 EDP currents used.

SYNC_MASTER=T27_MLB SYNC_DATE=08/06/2009

PAGE TITLE: MCP Power & Ground

Apple Inc.

DRAWING NUMBER: 051-8563 SIZE: D

REVISION: A.13.0

BRANCH:

PAGE: 20 OF 109

SHEET: 19 OF 80

NOTICE OF PROPRIETARY PROPERTY:
THE INFORMATION CONTAINED HEREIN IS THE PROPRIETARY PROPERTY OF APPLE COMPUTER, INC.
THE POSESSOR AGREES TO THE FOLLOWING:
I TO MAINTAIN THIS DOCUMENT IN CONFIDENCE
II NOT TO REPRODUCE OR COPY IT
III NOT TO REVEAL OR PUBLISH IT IN WHOLE OR PART
IV ALL RIGHTS RESERVED

www.vinafix.vn

http://24hcongnghe.org

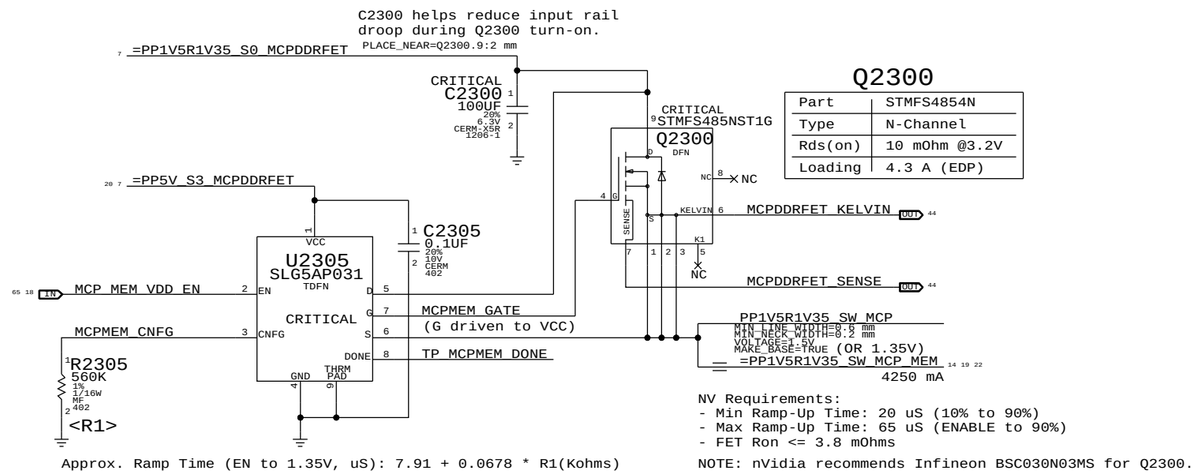

Q2300	
Part	STMFS4854N
Type	N-Channel
Rds(on)	10 mOhm @3.2V
Loading	4.3 A (EDP)

NV Requirements:
- Min Ramp-Up Time: 20 uS (10% to 90%)
- Max Ramp-Up Time: 65 uS (ENABLE to 90%)
- FET Ron <= 3.8 mOhms

NOTE: nVidia recommends Infineon BSC030N03MS for Q2300.

Approx. Ramp Time (EN to 1.35V, uS): 7.91 + 0.0678 * R1(Kohms)

Gated Rail Savings: 120mW

DIMM CKE Clamps

CKE must be held low to keep memory in self-refresh.
Clamps enable before MCP89 MEMVDD rail switched off.
Clamps release after MCP89 MEMVDD is up and CKEs are driven by MCP89.
Clamps also discharge VTT rail via termination resistor on each CKE signal on DIMM.
Q2355/Q2356 chosen for low output capacitance.

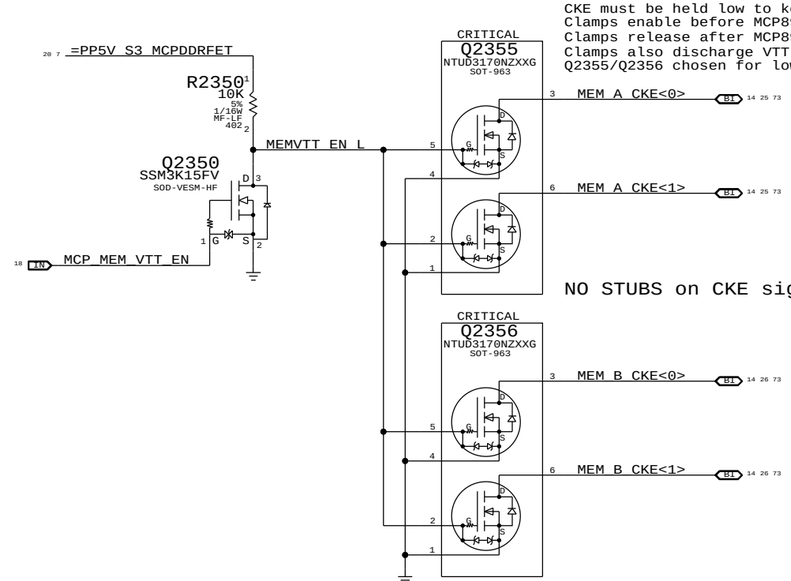

NO STUBS on CKE signals!

SYNC_MASTER=T27_MLB SYNC_DATE=11/23/2009

PAGE TITLE
MCP89 Memory Rail Gating

Apple Inc.

DRAWING NUMBER 051-8563 SIZE D
REVISION A.13.0
BRANCH
PAGE 23 OF 109
SHEET 20 OF 80

NOTICE OF PROPRIETARY PROPERTY:
THE INFORMATION CONTAINED HEREIN IS THE PROPRIETARY PROPERTY OF APPLE COMPUTER, INC.
THE POSESSOR AGREES TO THE FOLLOWING:
I TO MAINTAIN THIS DOCUMENT IN CONFIDENCE
II NOT TO REPRODUCE OR COPY IT
III NOT TO REVEAL OR PUBLISH IT IN WHOLE OR PART
IV ALL RIGHTS RESERVED

www.vinafix.vn

http://24hcongnghe.org

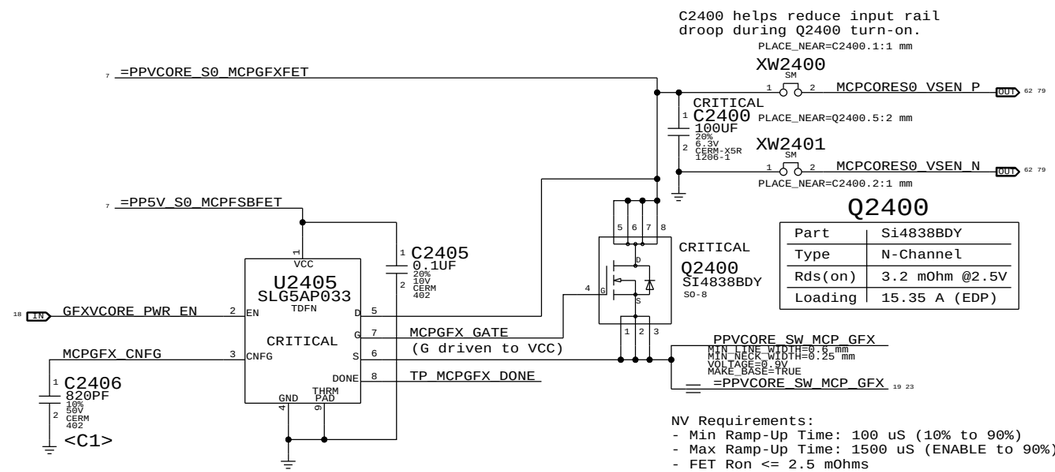

Q2400

Part	Si4838BDY
Type	N-Channel
Rds(on)	3.2 mOhm @2.5V
Loading	15.35 A (EDP)

Approx. Ramp Time (EN to 1V, uS): 43.9 + 0.6943 * C1(pF)

NV Requirements:
- Min Ramp-Up Time: 100 uS (10% to 90%)
- Max Ramp-Up Time: 1500 uS (ENABLE to 90%)
- FET Ron <= 2.5 mOhms

NOTE: nVidia recommends Infineon BSC020N03MS for Q2400.

Gated Rail Savings: 860mW

SYNC_MASTER=T27_MLB SYNC_DATE=11/23/2009

PAGE TITLE
MCP89 GFX Core Rail Gating

Apple Inc.

DRAWING NUMBER 051-8563 SIZE D
REVISION A.13.0
BRANCH
PAGE 24 OF 109
SHEET 21 OF 80

NOTICE OF PROPRIETARY PROPERTY:
THE INFORMATION CONTAINED HEREIN IS THE PROPRIETARY PROPERTY OF APPLE COMPUTER, INC.
THE POSESSOR AGREES TO THE FOLLOWING:
I TO MAINTAIN THIS DOCUMENT IN CONFIDENCE
II NOT TO REPRODUCE OR COPY IT
III NOT TO REVEAL OR PUBLISH IT IN WHOLE OR PART
IV ALL RIGHTS RESERVED

www.vinafix.vn

http://24hcongnghe.org

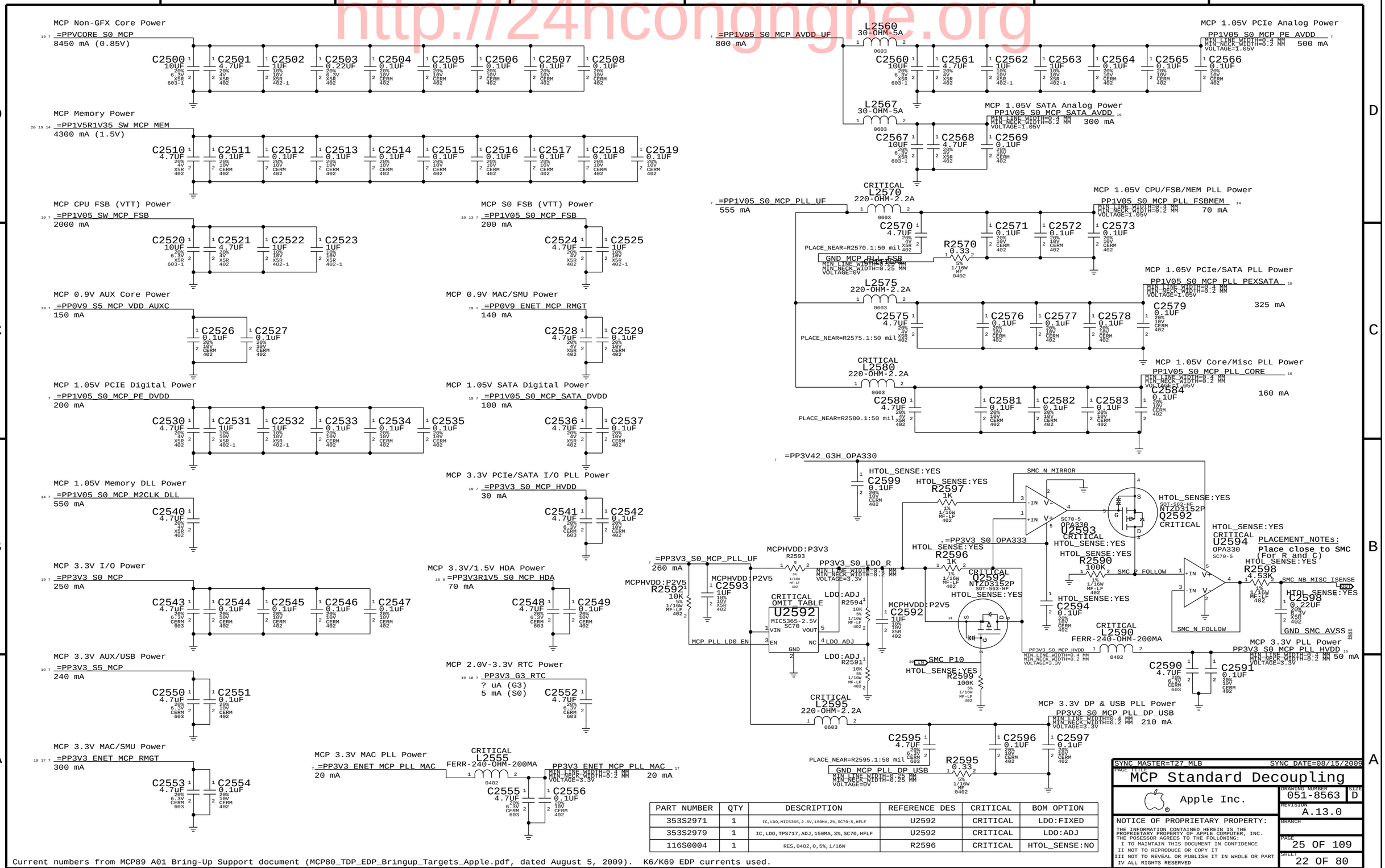

PART NUMBER	QTY	DESCRIPTION	REFERENCE DES	CRITICAL	BOM OPTION
353S2971	1	IC,LDO,MIC5365,2.5V,150MA,2%,SC70-5,HFLF	U2592	CRITICAL	LDO:FIXED
353S2979	1	IC,LDO,TPS717,ADJ,150MA,3%,SC70,HFLF	U2592	CRITICAL	LDO:ADJ
116S0004	1	RES,0402,0,5%,1/16W	R2596	CRITICAL	HTOL_SENSE:NO

Current numbers from MCP89 A01 Bring-Up Support document (MCP80_TDP_EDP_Bringup_Targets_Apple.pdf, dated August 5, 2009). K6/K69 EDP currents used.

SYNC_MASTER=T27_MLB SYNC_DATE=08/15/2009

PAGE TITLE
MCP Standard Decoupling

Apple Inc.

DRAWING NUMBER 051-8563 SIZE D

REVISION A.13.0

BRANCH

PAGE 25 OF 109

SHEET 22 OF 80

NOTICE OF PROPRIETARY PROPERTY:
THE INFORMATION CONTAINED HEREIN IS THE PROPRIETARY PROPERTY OF APPLE COMPUTER, INC.
THE POSESSOR AGREES TO THE FOLLOWING:
I TO MAINTAIN THIS DOCUMENT IN CONFIDENCE
II NOT TO REPRODUCE OR COPY IT
III NOT TO REVEAL OR PUBLISH IT IN WHOLE OR PART
IV ALL RIGHTS RESERVED

www.vinafix.vn

http://24hcongnghe.org

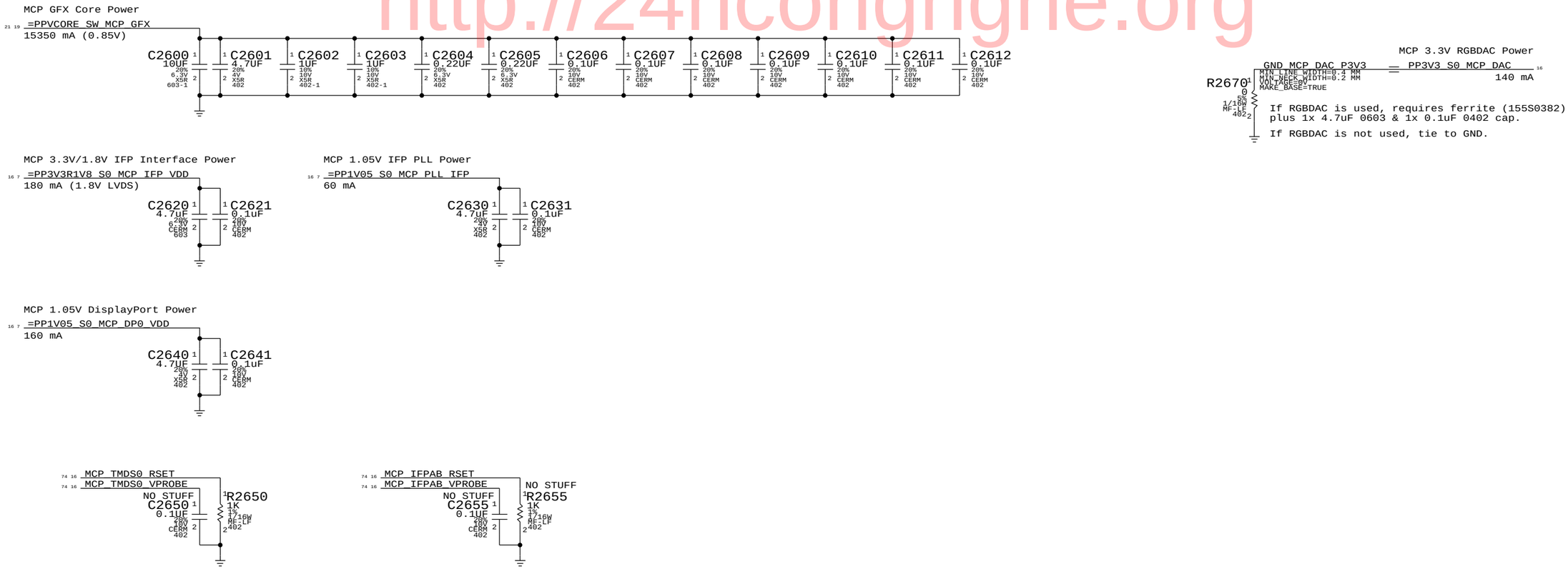

Current numbers from MCP89 A01 Bring-Up Support document (MCP80_TDP_EDP_Bringup_Targets_Apple.pdf, dated August 5, 2009). K6/K69 EDP currents used.

SYNC_MASTER=T27_MLB SYNC_DATE=08/06/2009

PAGE TITLE
MCP Graphics Support

Apple Inc.

DRAWING NUMBER 051-8563 SIZE D

REVISION A.13.0

BRANCH

PAGE 26 OF 109

SHEET 23 OF 80

NOTICE OF PROPRIETARY PROPERTY:
THE INFORMATION CONTAINED HEREIN IS THE PROPRIETARY PROPERTY OF APPLE COMPUTER, INC.
THE POSESSOR AGREES TO THE FOLLOWING:
I TO MAINTAIN THIS DOCUMENT IN CONFIDENCE
II NOT TO REPRODUCE OR COPY IT
III NOT TO REVEAL OR PUBLISH IT IN WHOLE OR PART
IV ALL RIGHTS RESERVED

www.vinafix.vn

http://24hcongnghe.org

RTC Crystal

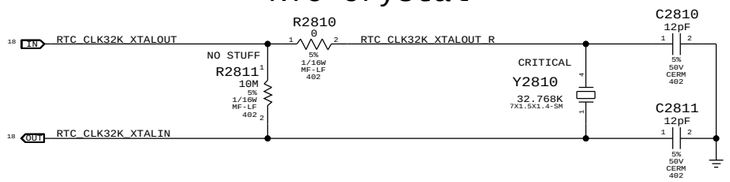

MCP 25MHz Crystal

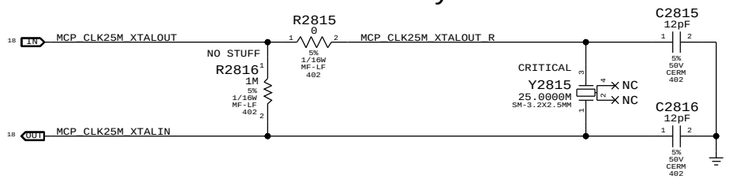

Caesar II (ENET) 25MHz Crystal

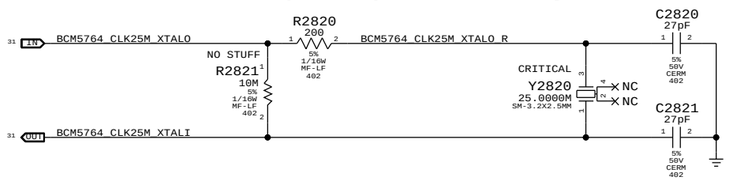

Ethernet WAKE# Isolation

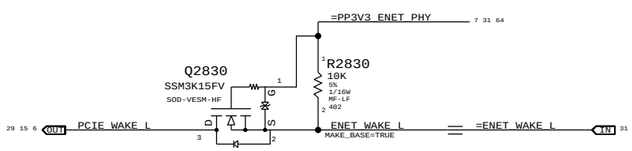

MCP S0 PWRGD & CPU_VLD

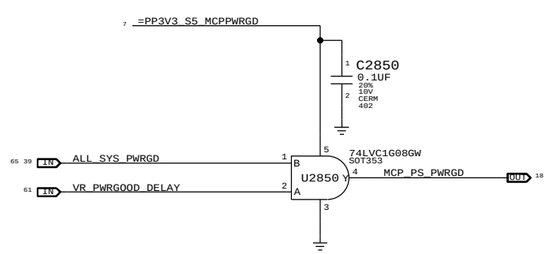

Platform Reset Connections

LPC Reset (Unbuffered)

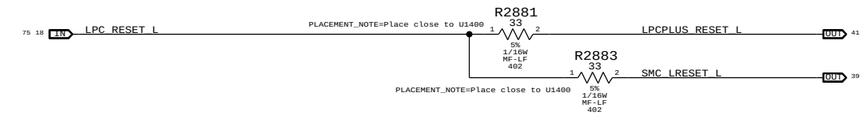

PCIE Reset (Unbuffered)

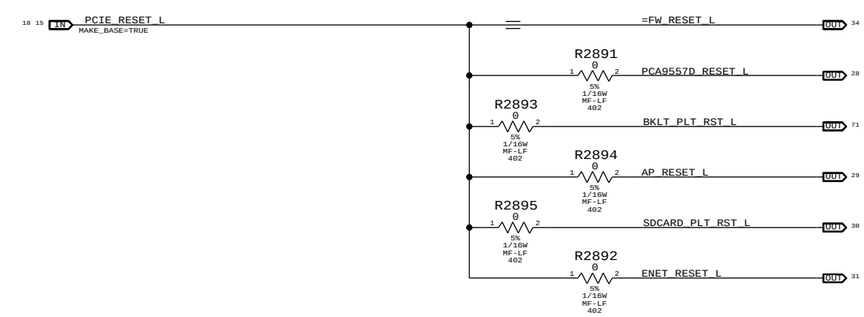

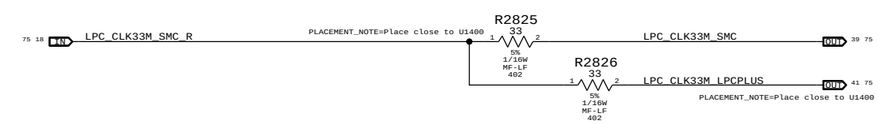

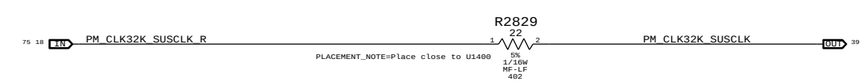

System Reset Circuit

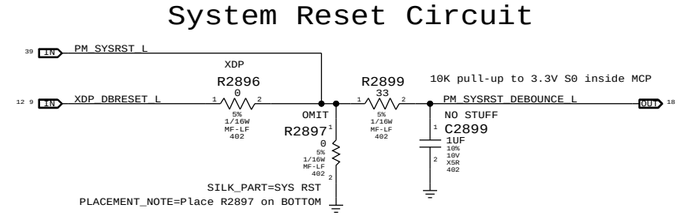

SYNC_MASTER=T27_MLB SYNC_DATE=07/28/2009

PAGE TITLE: SB Misc

Apple Inc.

DRAWING NUMBER: 051-8563 SIZE: D

REVISION: A.13.0

BRANCH

PAGE: 28 OF 109

SHEET: 24 OF 80

NOTICE OF PROPRIETARY PROPERTY:
THE INFORMATION CONTAINED HEREIN IS THE PROPRIETARY PROPERTY OF APPLE COMPUTER, INC.
THE POSESSOR AGREES TO THE FOLLOWING:
I TO MAINTAIN THIS DOCUMENT IN CONFIDENCE
II NOT TO REPRODUCE OR COPY IT
III NOT TO REVEAL OR PUBLISH IT IN WHOLE OR PART
IV ALL RIGHTS RESERVED

www.vinafix.vn

http://24hcongnghe.org

Page Notes

Power aliases required by this page:
- =PPLVDDR_S3_MEM_A
- =PPDDRVTT_S0_MEM_A
- =PPSPD_S0_MEM_A (2.5 - 3.3V)

Signal aliases required by this page:
- =I2C_SODIMMA_SCL
- =I2C_SODIMMA_SDA

BOM options provided by this page:
(NONE)

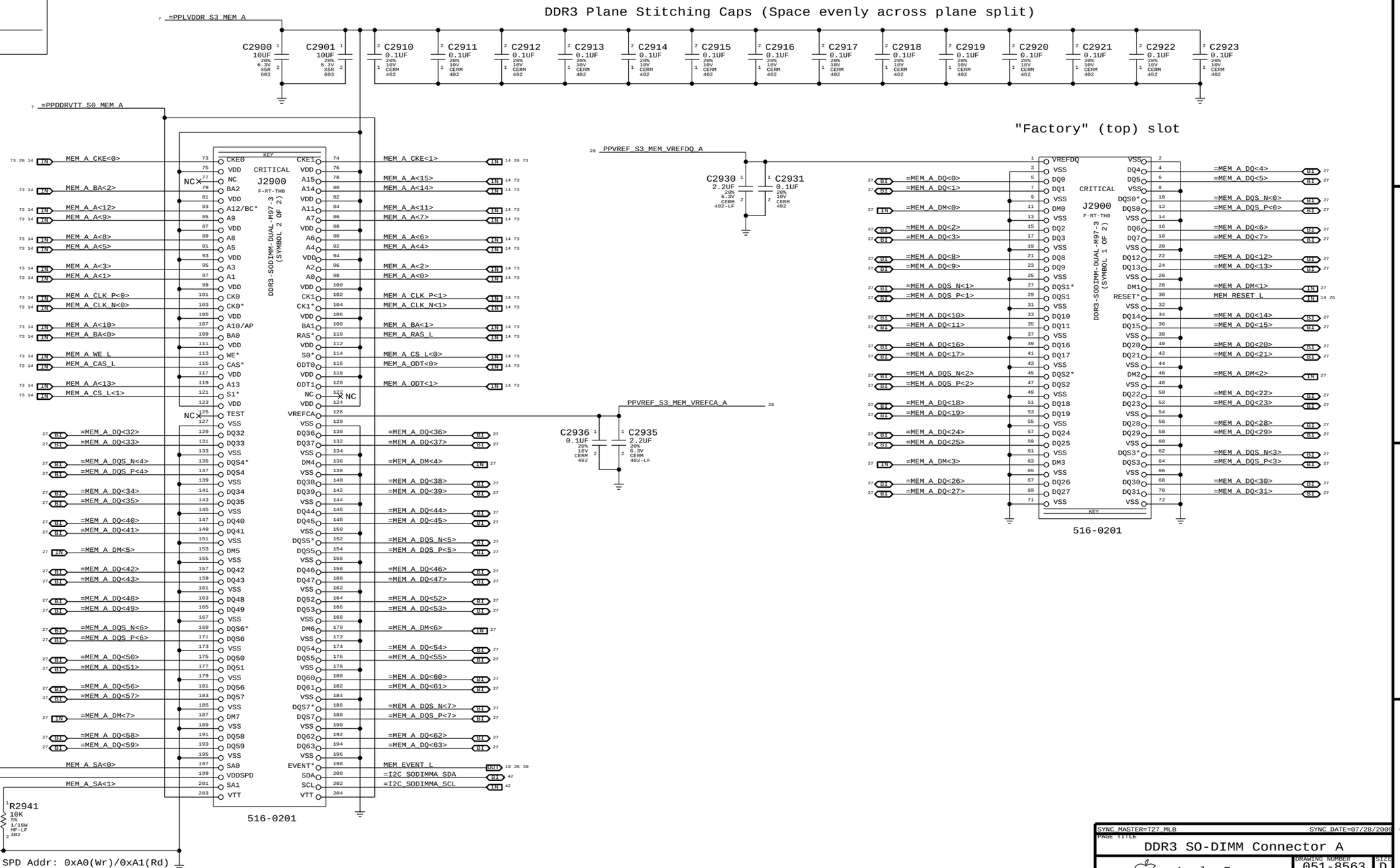

SYNC MASTER=T27_MLB SYNC DATE=07/28/2009

PAGE TITLE
DDR3 SO-DIMM Connector A

Apple Inc.

DRAWING NUMBER 051-8563 SIZE D

REVISION A.13.0

BRANCH

PAGE 29 OF 109

SHEET 25 OF 80

NOTICE OF PROPRIETARY PROPERTY:
THE INFORMATION CONTAINED HEREIN IS THE PROPRIETARY PROPERTY OF APPLE COMPUTER, INC.
THE POSESSOR AGREES TO THE FOLLOWING:
I TO MAINTAIN THIS DOCUMENT IN CONFIDENCE
II NOT TO REPRODUCE OR COPY IT
III NOT TO REVEAL OR PUBLISH IT IN WHOLE OR PART
IV ALL RIGHTS RESERVED

www.vinafix.vn

http://24hcongnghe.org

Page Notes

Power aliases required by this page:
- =PPLVDDR_S3_MEM_B
- =PPDDRVTT_S0_MEM_B
- =PPSPD_S0_MEM_B (2.5 - 3.3V)

Signal aliases required by this page:
- =I2C_SODIMMB_SCL
- =I2C_SODIMMB_SDA

BOM options provided by this page:
(NONE)

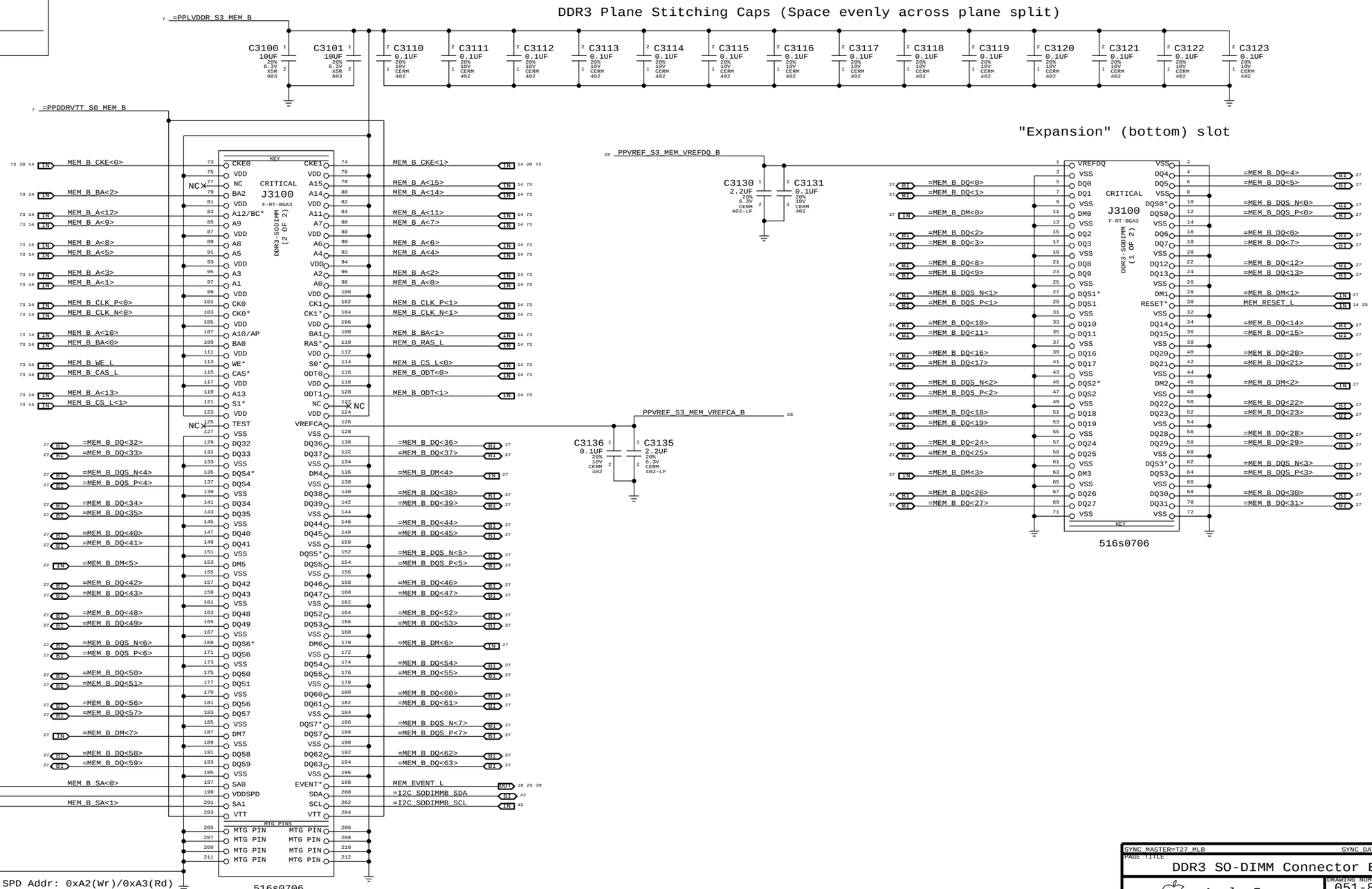

SYNC_MASTER=T27_MLB	SYNC_DATE=07/28/2006
PAGE TITLE	DDR3 SO-DIMM Connector B
Apple Inc.	DRAWING NUMBER 051-8563 SIZE D
	REVISION A.13.0
	BRANCH
	PAGE 31 OF 109
	SHEET 26 OF 80

NOTICE OF PROPRIETARY PROPERTY:
THE INFORMATION CONTAINED HEREIN IS THE PROPRIETARY PROPERTY OF APPLE COMPUTER, INC.
THE POSESSOR AGREES TO THE FOLLOWING:
I TO MAINTAIN THIS DOCUMENT IN CONFIDENCE
II NOT TO REPRODUCE OR COPY IT
III NOT TO REVEAL OR PUBLISH IT IN WHOLE OR PART
IV ALL RIGHTS RESERVED

www.vinafix.vn

http://24hcongnghe.org

MCP CHANNEL A DQS 0 -> DIMM A DQS 0

MEM_A_DQ<0>	MAKE_BASE=TRUE	=	=MEM_A_DQ<7>
MEM_A_DQ<1>	MAKE_BASE=TRUE	=	=MEM_A_DQ<2>
MEM_A_DQ<2>	MAKE_BASE=TRUE	=	=MEM_A_DQ<3>
MEM_A_DQ<3>	MAKE_BASE=TRUE	=	=MEM_A_DQ<5>
MEM_A_DQ<4>	MAKE_BASE=TRUE	=	=MEM_A_DQ<1>
MEM_A_DQ<5>	MAKE_BASE=TRUE	=	=MEM_A_DQ<0>
MEM_A_DQ<6>	MAKE_BASE=TRUE	=	=MEM_A_DQ<6>
MEM_A_DQ<7>	MAKE_BASE=TRUE	=	=MEM_A_DQ<4>
MEM_A_DM<0>	MAKE_BASE=TRUE	=	=MEM_A_DM<0>
MEM_A_DQS_N<0>	MAKE_BASE=TRUE	=	=MEM_A_DQS_N<0>
MEM_A_DQS_P<0>	MAKE_BASE=TRUE	=	=MEM_A_DQS_P<0>

MCP CHANNEL A DQS 1 -> DIMM A DQS 1

MEM_A_DQ<8>	MAKE_BASE=TRUE	=	=MEM_A_DQ<8>
MEM_A_DQ<9>	MAKE_BASE=TRUE	=	=MEM_A_DQ<9>
MEM_A_DQ<10>	MAKE_BASE=TRUE	=	=MEM_A_DQ<14>
MEM_A_DQ<11>	MAKE_BASE=TRUE	=	=MEM_A_DQ<10>
MEM_A_DQ<12>	MAKE_BASE=TRUE	=	=MEM_A_DQ<13>
MEM_A_DQ<13>	MAKE_BASE=TRUE	=	=MEM_A_DQ<12>
MEM_A_DQ<14>	MAKE_BASE=TRUE	=	=MEM_A_DQ<15>
MEM_A_DQ<15>	MAKE_BASE=TRUE	=	=MEM_A_DQ<11>
MEM_A_DM<1>	MAKE_BASE=TRUE	=	=MEM_A_DM<1>
MEM_A_DQS_N<1>	MAKE_BASE=TRUE	=	=MEM_A_DQS_N<1>
MEM_A_DQS_P<1>	MAKE_BASE=TRUE	=	=MEM_A_DQS_P<1>

MCP CHANNEL A DQS 2 -> DIMM A DQS 2

MEM_A_DQ<16>	MAKE_BASE=TRUE	=	=MEM_A_DQ<17>
MEM_A_DQ<17>	MAKE_BASE=TRUE	=	=MEM_A_DQ<20>
MEM_A_DQ<18>	MAKE_BASE=TRUE	=	=MEM_A_DQ<18>
MEM_A_DQ<19>	MAKE_BASE=TRUE	=	=MEM_A_DQ<19>
MEM_A_DQ<20>	MAKE_BASE=TRUE	=	=MEM_A_DQ<21>
MEM_A_DQ<21>	MAKE_BASE=TRUE	=	=MEM_A_DQ<16>
MEM_A_DQ<22>	MAKE_BASE=TRUE	=	=MEM_A_DQ<23>
MEM_A_DQ<23>	MAKE_BASE=TRUE	=	=MEM_A_DQ<22>
MEM_A_DM<2>	MAKE_BASE=TRUE	=	=MEM_A_DM<2>
MEM_A_DQS_N<2>	MAKE_BASE=TRUE	=	=MEM_A_DQS_N<2>
MEM_A_DQS_P<2>	MAKE_BASE=TRUE	=	=MEM_A_DQS_P<2>

MCP CHANNEL A DQS 3 -> DIMM A DQS 3

MEM_A_DQ<24>	MAKE_BASE=TRUE	=	=MEM_A_DQ<29>
MEM_A_DQ<25>	MAKE_BASE=TRUE	=	=MEM_A_DQ<26>
MEM_A_DQ<26>	MAKE_BASE=TRUE	=	=MEM_A_DQ<31>
MEM_A_DQ<27>	MAKE_BASE=TRUE	=	=MEM_A_DQ<27>
MEM_A_DQ<28>	MAKE_BASE=TRUE	=	=MEM_A_DQ<28>
MEM_A_DQ<29>	MAKE_BASE=TRUE	=	=MEM_A_DQ<25>
MEM_A_DQ<30>	MAKE_BASE=TRUE	=	=MEM_A_DQ<24>
MEM_A_DQ<31>	MAKE_BASE=TRUE	=	=MEM_A_DQ<30>
MEM_A_DM<3>	MAKE_BASE=TRUE	=	=MEM_A_DM<3>
MEM_A_DQS_N<3>	MAKE_BASE=TRUE	=	=MEM_A_DQS_N<3>
MEM_A_DQS_P<3>	MAKE_BASE=TRUE	=	=MEM_A_DQS_P<3>

MCP CHANNEL A DQS 4 -> DIMM A DQS 4

MEM_A_DQ<32>	MAKE_BASE=TRUE	=	=MEM_A_DQ<38>
MEM_A_DQ<33>	MAKE_BASE=TRUE	=	=MEM_A_DQ<39>
MEM_A_DQ<34>	MAKE_BASE=TRUE	=	=MEM_A_DQ<35>
MEM_A_DQ<35>	MAKE_BASE=TRUE	=	=MEM_A_DQ<32>
MEM_A_DQ<36>	MAKE_BASE=TRUE	=	=MEM_A_DQ<36>
MEM_A_DQ<37>	MAKE_BASE=TRUE	=	=MEM_A_DQ<34>
MEM_A_DQ<38>	MAKE_BASE=TRUE	=	=MEM_A_DQ<33>
MEM_A_DQ<39>	MAKE_BASE=TRUE	=	=MEM_A_DQ<37>
MEM_A_DM<4>	MAKE_BASE=TRUE	=	=MEM_A_DM<4>
MEM_A_DQS_N<4>	MAKE_BASE=TRUE	=	=MEM_A_DQS_N<4>
MEM_A_DQS_P<4>	MAKE_BASE=TRUE	=	=MEM_A_DQS_P<4>

MCP CHANNEL A DQS 5 -> DIMM A DQS 5

MEM_A_DQ<40>	MAKE_BASE=TRUE	=	=MEM_A_DQ<44>
MEM_A_DQ<41>	MAKE_BASE=TRUE	=	=MEM_A_DQ<45>
MEM_A_DQ<42>	MAKE_BASE=TRUE	=	=MEM_A_DQ<47>
MEM_A_DQ<43>	MAKE_BASE=TRUE	=	=MEM_A_DQ<43>
MEM_A_DQ<44>	MAKE_BASE=TRUE	=	=MEM_A_DQ<42>
MEM_A_DQ<45>	MAKE_BASE=TRUE	=	=MEM_A_DQ<40>
MEM_A_DQ<46>	MAKE_BASE=TRUE	=	=MEM_A_DQ<41>
MEM_A_DQ<47>	MAKE_BASE=TRUE	=	=MEM_A_DQ<46>
MEM_A_DM<5>	MAKE_BASE=TRUE	=	=MEM_A_DM<5>
MEM_A_DQS_N<5>	MAKE_BASE=TRUE	=	=MEM_A_DQS_N<5>
MEM_A_DQS_P<5>	MAKE_BASE=TRUE	=	=MEM_A_DQS_P<5>

MCP CHANNEL A DQS 6 -> DIMM A DQS 6

MEM_A_DQ<48>	MAKE_BASE=TRUE	=	=MEM_A_DQ<51>
MEM_A_DQ<49>	MAKE_BASE=TRUE	=	=MEM_A_DQ<53>
MEM_A_DQ<50>	MAKE_BASE=TRUE	=	=MEM_A_DQ<50>
MEM_A_DQ<51>	MAKE_BASE=TRUE	=	=MEM_A_DQ<54>
MEM_A_DQ<52>	MAKE_BASE=TRUE	=	=MEM_A_DQ<48>
MEM_A_DQ<53>	MAKE_BASE=TRUE	=	=MEM_A_DQ<49>
MEM_A_DQ<54>	MAKE_BASE=TRUE	=	=MEM_A_DQ<55>
MEM_A_DQ<55>	MAKE_BASE=TRUE	=	=MEM_A_DQ<52>
MEM_A_DM<6>	MAKE_BASE=TRUE	=	=MEM_A_DM<6>
MEM_A_DQS_N<6>	MAKE_BASE=TRUE	=	=MEM_A_DQS_N<6>
MEM_A_DQS_P<6>	MAKE_BASE=TRUE	=	=MEM_A_DQS_P<6>

MCP CHANNEL A DQS 7 -> DIMM A DQS 7

MEM_A_DQ<56>	MAKE_BASE=TRUE	=	=MEM_A_DQ<56>
MEM_A_DQ<57>	MAKE_BASE=TRUE	=	=MEM_A_DQ<61>
MEM_A_DQ<58>	MAKE_BASE=TRUE	=	=MEM_A_DQ<62>
MEM_A_DQ<59>	MAKE_BASE=TRUE	=	=MEM_A_DQ<59>
MEM_A_DQ<60>	MAKE_BASE=TRUE	=	=MEM_A_DQ<57>
MEM_A_DQ<61>	MAKE_BASE=TRUE	=	=MEM_A_DQ<60>
MEM_A_DQ<62>	MAKE_BASE=TRUE	=	=MEM_A_DQ<63>
MEM_A_DQ<63>	MAKE_BASE=TRUE	=	=MEM_A_DQ<58>
MEM_A_DM<7>	MAKE_BASE=TRUE	=	=MEM_A_DM<7>
MEM_A_DQS_N<7>	MAKE_BASE=TRUE	=	=MEM_A_DQS_N<7>
MEM_A_DQS_P<7>	MAKE_BASE=TRUE	=	=MEM_A_DQS_P<7>

MCP CHANNEL B DQS 0 -> DIMM B DQS 0

MEM_B_DQ<0>	MAKE_BASE=TRUE	=	=MEM_B_DQ<5>
MEM_B_DQ<1>	MAKE_BASE=TRUE	=	=MEM_B_DQ<4>
MEM_B_DQ<2>	MAKE_BASE=TRUE	=	=MEM_B_DQ<3>
MEM_B_DQ<3>	MAKE_BASE=TRUE	=	=MEM_B_DQ<7>
MEM_B_DQ<4>	MAKE_BASE=TRUE	=	=MEM_B_DQ<1>
MEM_B_DQ<5>	MAKE_BASE=TRUE	=	=MEM_B_DQ<0>
MEM_B_DQ<6>	MAKE_BASE=TRUE	=	=MEM_B_DQ<6>
MEM_B_DQ<7>	MAKE_BASE=TRUE	=	=MEM_B_DQ<2>
MEM_B_DM<0>	MAKE_BASE=TRUE	=	=MEM_B_DM<0>
MEM_B_DQS_N<0>	MAKE_BASE=TRUE	=	=MEM_B_DQS_N<0>
MEM_B_DQS_P<0>	MAKE_BASE=TRUE	=	=MEM_B_DQS_P<0>

MCP CHANNEL B DQS 1 -> DIMM B DQS 2

MEM_B_DQ<8>	MAKE_BASE=TRUE	=	=MEM_B_DQ<21>
MEM_B_DQ<9>	MAKE_BASE=TRUE	=	=MEM_B_DQ<20>
MEM_B_DQ<10>	MAKE_BASE=TRUE	=	=MEM_B_DQ<18>
MEM_B_DQ<11>	MAKE_BASE=TRUE	=	=MEM_B_DQ<19>
MEM_B_DQ<12>	MAKE_BASE=TRUE	=	=MEM_B_DQ<16>
MEM_B_DQ<13>	MAKE_BASE=TRUE	=	=MEM_B_DQ<17>
MEM_B_DQ<14>	MAKE_BASE=TRUE	=	=MEM_B_DQ<22>
MEM_B_DQ<15>	MAKE_BASE=TRUE	=	=MEM_B_DQ<23>
MEM_B_DM<1>	MAKE_BASE=TRUE	=	=MEM_B_DM<2>
MEM_B_DQS_N<1>	MAKE_BASE=TRUE	=	=MEM_B_DQS_N<2>
MEM_B_DQS_P<1>	MAKE_BASE=TRUE	=	=MEM_B_DQS_P<2>

MCP CHANNEL B DQS 2 -> DIMM B DQS 1

MEM_B_DQ<16>	MAKE_BASE=TRUE	=	=MEM_B_DQ<14>
MEM_B_DQ<17>	MAKE_BASE=TRUE	=	=MEM_B_DQ<11>
MEM_B_DQ<18>	MAKE_BASE=TRUE	=	=MEM_B_DQ<12>
MEM_B_DQ<19>	MAKE_BASE=TRUE	=	=MEM_B_DQ<8>
MEM_B_DQ<20>	MAKE_BASE=TRUE	=	=MEM_B_DQ<10>
MEM_B_DQ<21>	MAKE_BASE=TRUE	=	=MEM_B_DQ<15>
MEM_B_DQ<22>	MAKE_BASE=TRUE	=	=MEM_B_DQ<13>
MEM_B_DQ<23>	MAKE_BASE=TRUE	=	=MEM_B_DQ<9>
MEM_B_DM<2>	MAKE_BASE=TRUE	=	=MEM_B_DM<1>
MEM_B_DQS_N<2>	MAKE_BASE=TRUE	=	=MEM_B_DQS_N<1>
MEM_B_DQS_P<2>	MAKE_BASE=TRUE	=	=MEM_B_DQS_P<1>

MCP CHANNEL B DQS 3 -> DIMM B DQS 3

MEM_B_DQ<24>	MAKE_BASE=TRUE	=	=MEM_B_DQ<28>
MEM_B_DQ<25>	MAKE_BASE=TRUE	=	=MEM_B_DQ<24>
MEM_B_DQ<26>	MAKE_BASE=TRUE	=	=MEM_B_DQ<26>
MEM_B_DQ<27>	MAKE_BASE=TRUE	=	=MEM_B_DQ<30>
MEM_B_DQ<28>	MAKE_BASE=TRUE	=	=MEM_B_DQ<25>
MEM_B_DQ<29>	MAKE_BASE=TRUE	=	=MEM_B_DQ<29>
MEM_B_DQ<30>	MAKE_BASE=TRUE	=	=MEM_B_DQ<31>
MEM_B_DQ<31>	MAKE_BASE=TRUE	=	=MEM_B_DQ<27>
MEM_B_DM<3>	MAKE_BASE=TRUE	=	=MEM_B_DM<3>
MEM_B_DQS_N<3>	MAKE_BASE=TRUE	=	=MEM_B_DQS_N<3>
MEM_B_DQS_P<3>	MAKE_BASE=TRUE	=	=MEM_B_DQS_P<3>

MCP CHANNEL B DQS 4 -> DIMM B DQS 4

MEM_B_DQ<32>	MAKE_BASE=TRUE	=	=MEM_B_DQ<32>
MEM_B_DQ<33>	MAKE_BASE=TRUE	=	=MEM_B_DQ<37>
MEM_B_DQ<34>	MAKE_BASE=TRUE	=	=MEM_B_DQ<34>
MEM_B_DQ<35>	MAKE_BASE=TRUE	=	=MEM_B_DQ<35>
MEM_B_DQ<36>	MAKE_BASE=TRUE	=	=MEM_B_DQ<36>
MEM_B_DQ<37>	MAKE_BASE=TRUE	=	=MEM_B_DQ<33>
MEM_B_DQ<38>	MAKE_BASE=TRUE	=	=MEM_B_DQ<39>
MEM_B_DQ<39>	MAKE_BASE=TRUE	=	=MEM_B_DQ<38>
MEM_B_DM<4>	MAKE_BASE=TRUE	=	=MEM_B_DM<4>
MEM_B_DQS_N<4>	MAKE_BASE=TRUE	=	=MEM_B_DQS_N<4>
MEM_B_DQS_P<4>	MAKE_BASE=TRUE	=	=MEM_B_DQS_P<4>

MCP CHANNEL B DQS 5 -> DIMM B DQS 5

MEM_B_DQ<40>	MAKE_BASE=TRUE	=	=MEM_B_DQ<42>
MEM_B_DQ<41>	MAKE_BASE=TRUE	=	=MEM_B_DQ<44>
MEM_B_DQ<42>	MAKE_BASE=TRUE	=	=MEM_B_DQ<41>
MEM_B_DQ<43>	MAKE_BASE=TRUE	=	=MEM_B_DQ<40>
MEM_B_DQ<44>	MAKE_BASE=TRUE	=	=MEM_B_DQ<47>
MEM_B_DQ<45>	MAKE_BASE=TRUE	=	=MEM_B_DQ<45>
MEM_B_DQ<46>	MAKE_BASE=TRUE	=	=MEM_B_DQ<46>
MEM_B_DQ<47>	MAKE_BASE=TRUE	=	=MEM_B_DQ<43>
MEM_B_DM<5>	MAKE_BASE=TRUE	=	=MEM_B_DM<5>
MEM_B_DQS_N<5>	MAKE_BASE=TRUE	=	=MEM_B_DQS_N<5>
MEM_B_DQS_P<5>	MAKE_BASE=TRUE	=	=MEM_B_DQS_P<5>

MCP CHANNEL B DQS 6 -> DIMM B DQS 6

MEM_B_DQ<48>	MAKE_BASE=TRUE	=	=MEM_B_DQ<49>
MEM_B_DQ<49>	MAKE_BASE=TRUE	=	=MEM_B_DQ<53>
MEM_B_DQ<50>	MAKE_BASE=TRUE	=	=MEM_B_DQ<50>
MEM_B_DQ<51>	MAKE_BASE=TRUE	=	=MEM_B_DQ<51>
MEM_B_DQ<52>	MAKE_BASE=TRUE	=	=MEM_B_DQ<52>
MEM_B_DQ<53>	MAKE_BASE=TRUE	=	=MEM_B_DQ<48>
MEM_B_DQ<54>	MAKE_BASE=TRUE	=	=MEM_B_DQ<55>
MEM_B_DQ<55>	MAKE_BASE=TRUE	=	=MEM_B_DQ<54>
MEM_B_DM<6>	MAKE_BASE=TRUE	=	=MEM_B_DM<6>
MEM_B_DQS_N<6>	MAKE_BASE=TRUE	=	=MEM_B_DQS_N<6>
MEM_B_DQS_P<6>	MAKE_BASE=TRUE	=	=MEM_B_DQS_P<6>

MCP CHANNEL B DQS 7 -> DIMM B DQS 7

MEM_B_DQ<56>	MAKE_BASE=TRUE	=	=MEM_B_DQ<62>
MEM_B_DQ<57>	MAKE_BASE=TRUE	=	=MEM_B_DQ<63>
MEM_B_DQ<58>	MAKE_BASE=TRUE	=	=MEM_B_DQ<56>
MEM_B_DQ<59>	MAKE_BASE=TRUE	=	=MEM_B_DQ<60>
MEM_B_DQ<60>	MAKE_BASE=TRUE	=	=MEM_B_DQ<59>
MEM_B_DQ<61>	MAKE_BASE=TRUE	=	=MEM_B_DQ<58>
MEM_B_DQ<62>	MAKE_BASE=TRUE	=	=MEM_B_DQ<57>
MEM_B_DQ<63>	MAKE_BASE=TRUE	=	=MEM_B_DQ<61>
MEM_B_DM<7>	MAKE_BASE=TRUE	=	=MEM_B_DM<7>
MEM_B_DQS_N<7>	MAKE_BASE=TRUE	=	=MEM_B_DQS_N<7>
MEM_B_DQS_P<7>	MAKE_BASE=TRUE	=	=MEM_B_DQS_P<7>

SYNC_MASTER=K18_MLB SYNC_DATE=06/19/2009

PAGE TITLE
DDR3 BYTE/BIT SWAPS-K6

Apple Inc.

DRAWING NUMBER 051-8563 SIZE D

REVISION A.13.0

BRANCH

PAGE 32 OF 109

SHEET 27 OF 80

NOTICE OF PROPRIETARY PROPERTY:
THE INFORMATION CONTAINED HEREIN IS THE PROPRIETARY PROPERTY OF APPLE COMPUTER, INC.
THE POSESSOR AGREES TO THE FOLLOWING:
I TO MAINTAIN THIS DOCUMENT IN CONFIDENCE
II NOT TO REPRODUCE OR COPY IT
III NOT TO REVEAL OR PUBLISH IT IN WHOLE OR PART
IV ALL RIGHTS RESERVED

www.vinafix.vn

http://24hcongnghe.org

NOTE: Must not enable more than two SO-DIMM margining buffers at once or VRef source may be overloaded.

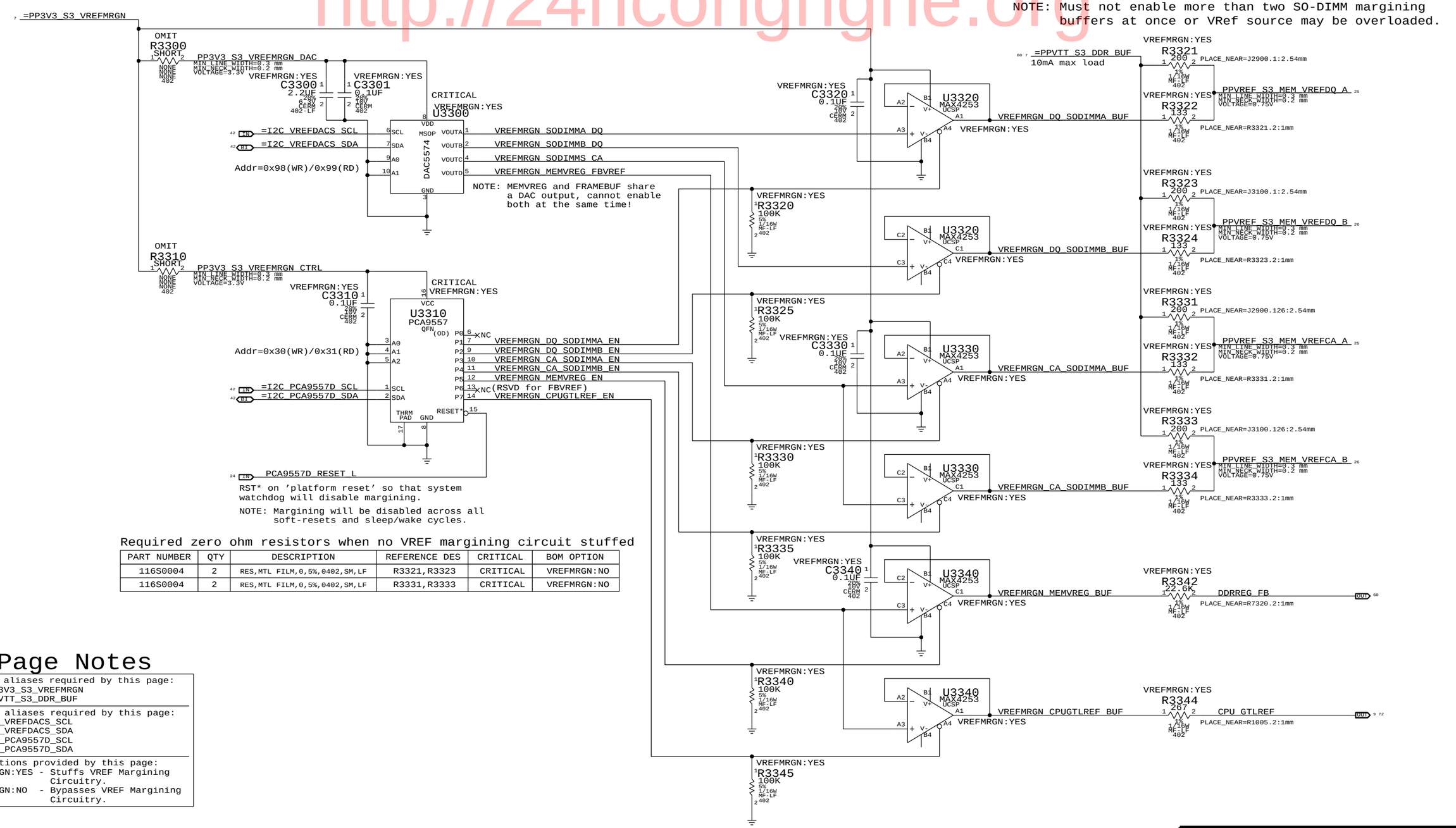

Required zero ohm resistors when no VREF margining circuit stuffed

PART NUMBER	QTY	DESCRIPTION	REFERENCE DES	CRITICAL	BOM OPTION
116S0004	2	RES,MTL FILM,0,5%,0402,SM,LF	R3321,R3323	CRITICAL	VREFMRGN:NO
116S0004	2	RES,MTL FILM,0,5%,0402,SM,LF	R3331,R3333	CRITICAL	VREFMRGN:NO

Page Notes

Power aliases required by this page:
- =PP3V3_S3_VREFMRGN
- =PPVTT_S3_DDR_BUF

Signal aliases required by this page:
- =I2C_VREFDACS_SCL
- =I2C_VREFDACS_SDA
- =I2C_PCA9557D_SCL
- =I2C_PCA9557D_SDA

BOM options provided by this page:
VREFMRGN:YES - Stuffs VREF Margining Circuitry.
VREFMRGN:NO - Bypasses VREF Margining Circuitry.

	MEM A VREF DQ	MEM B VREF DQ	MEM A VREF CA	MEM B VREF CA	MEM VREG	CPU GTLREF (FSB)
DAC Channel:	A	B	C	C	D	D
PCA9557D Pin:	1	2	3	4	5	7
Nominal value	0.75V (DAC: 0x3A)				1.5V (DAC: 0x3A)	0.7V (DAC: 0x8B)
Margined target:	0.300V - 1.200V (+/- 450mV)				1.998V - 1.002V (+/- 498mV)	0.200V - 1.050V (+/- 500mV)
DAC range:	0.000V - 1.501V (0x00 - 0x74)				0.000V - 1.501V (0x00 - 0x74)	0.000V - 1.191V (0x00 - 0x5C)
VRef current:	+3.4mA - -3.4mA (- = sourced)				+33uA - -33uA (- = sourced)	+750uA - -528uA (- = sourced)
DAC step size:	7.69mV / step @ output				8.59mV / step @ output	9.24mV / step @ output

SYNC_MASTER=T27_MLB SYNC_DATE=09/29/2009

PAGE TITLE: FSB/DDR3 Vref Margining

Apple Inc.

DRAWING NUMBER 051-8563 SIZE D

REVISION A.13.0

BRANCH

PAGE 33 OF 109

SHEET 28 OF 80

NOTICE OF PROPRIETARY PROPERTY:
THE INFORMATION CONTAINED HEREIN IS THE PROPRIETARY PROPERTY OF APPLE COMPUTER, INC.
THE POSESSOR AGREES TO THE FOLLOWING:
I TO MAINTAIN THIS DOCUMENT IN CONFIDENCE
II NOT TO REPRODUCE OR COPY IT
III NOT TO REVEAL OR PUBLISH IT IN WHOLE OR PART
IV ALL RIGHTS RESERVED

www.vinafix.vn

http://24hcongnghe.org

5V S3 WLAN FET

MOSFET	TPCP8102
CHANNEL	P-TYPE
RDS(ON)	26 mOhm @4.5V
LOADING	0.8 A (EDP)

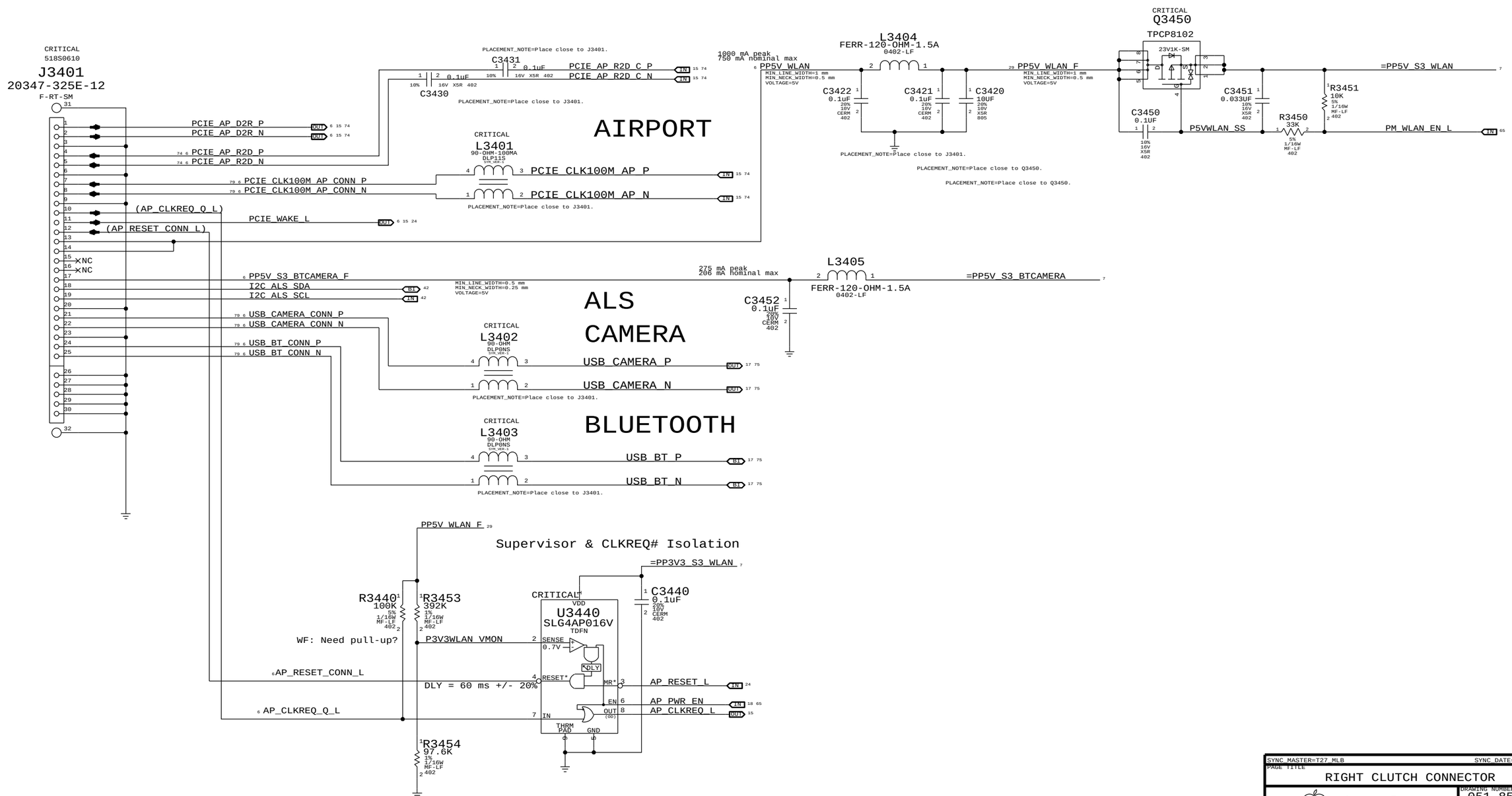

SYNC_MASTER=T27_MLB SYNC_DATE=07/28/2009

PAGE TITLE
RIGHT CLUTCH CONNECTOR

Apple Inc.

DRAWING NUMBER 051-8563 SIZE D
REVISION A.13.0
BRANCH
PAGE 34 OF 109
SHEET 29 OF 80

NOTICE OF PROPRIETARY PROPERTY:
THE INFORMATION CONTAINED HEREIN IS THE PROPRIETARY PROPERTY OF APPLE COMPUTER, INC.
THE POSESSOR AGREES TO THE FOLLOWING:
I TO MAINTAIN THIS DOCUMENT IN CONFIDENCE
II NOT TO REPRODUCE OR COPY IT
III NOT TO REVEAL OR PUBLISH IT IN WHOLE OR PART
IV ALL RIGHTS RESERVED

www.vinafix.vn

http://24hcongnghe.org

Caesar IV Support

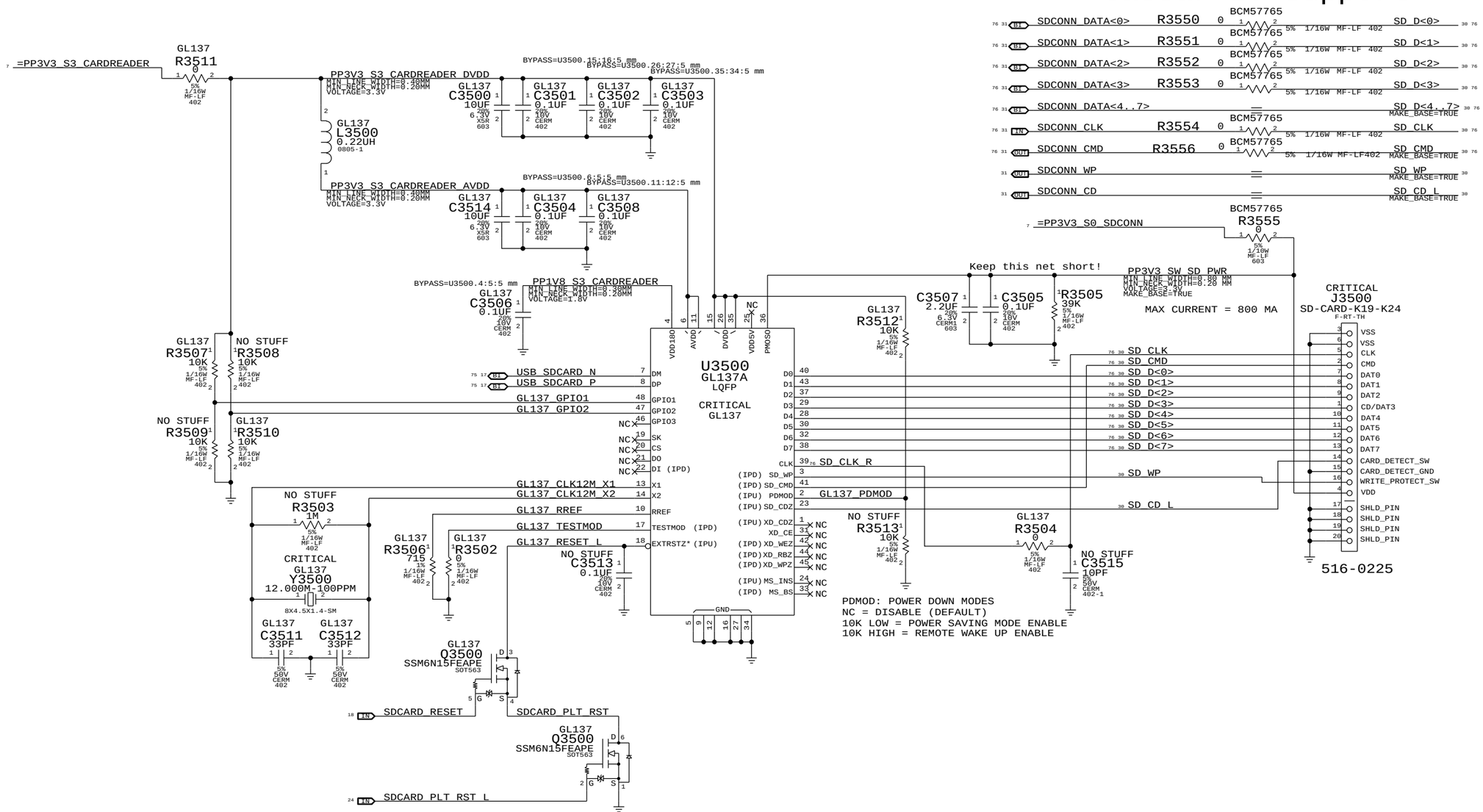

ADDED SERIES RESISTOR TO SD_CMD, MAX CURRENT NUMBER CHANGED TO 800MA

SYNC_MASTER=T27_MLB SYNC_DATE=09/30/2009

PAGE TITLE: SecureDigital Card Reader

Apple Inc.

DRAWING NUMBER: 051-8563 SIZE: D

REVISION: A.13.0

BRANCH:

PAGE: 35 OF 109

SHEET: 30 OF 80

NOTICE OF PROPRIETARY PROPERTY:
THE INFORMATION CONTAINED HEREIN IS THE PROPRIETARY PROPERTY OF APPLE COMPUTER, INC.
THE POSESSOR AGREES TO THE FOLLOWING:
I TO MAINTAIN THIS DOCUMENT IN CONFIDENCE
II NOT TO REPRODUCE OR COPY IT
III NOT TO REVEAL OR PUBLISH IT IN WHOLE OR PART
IV ALL RIGHTS RESERVED

www.vinafix.vn

http://24hcongnghe.org

BCM57765 SR pins are internal 1.2V switching regulator.
If unused: Okay to float all 4 pins. (Broadcom not so sure now)
If used: VDD/VDDP connect to =PP3V3_ENET_PHY (add bypassing), LX connects to inductor, VFB to =PP1V2_ENET_PHY

=PP3V3_ENET_PHY
86mA (1000base-T, Caesar II)

CRITICAL L3900 FERR-600-OHM-0.5A SM — PP3V3_ENET_PHY_XTALVDDH (MIN_LINE_WIDTH=0.4 mm, MIN_NECK_WIDTH=0.2 mm, VOLTAGE=3.3V)

CRITICAL L3905 FERR-600-OHM-0.5A SM — PP3V3_ENET_PHY_BIASVDDH (MIN_LINE_WIDTH=0.4 mm, MIN_NECK_WIDTH=0.2 mm, VOLTAGE=3.3V)

CRITICAL L3910 FERR-600-OHM-0.5A SM — PP3V3_ENET_PHY_AVDDH (MIN_LINE_WIDTH=0.4 mm, MIN_NECK_WIDTH=0.2 mm, VOLTAGE=3.3V)

BCM57765 R3915 0 5% 1/16W MF-LF 402 — BCM57765_SR_VDD
BCM57765 R3900 0 5% 1/16W MF-LF 402 — BCM57765_VDDO_PIN20 (MIN_LINE_WIDTH=0.4 mm, MIN_NECK_WIDTH=0.2 mm, VOLTAGE=3.3V) — BCM57765_XTALVDDH (MIN_LINE_WIDTH=0.4 mm, MIN_NECK_WIDTH=0.2 mm, VOLTAGE=3.3V)

C3900 0.1UF 10% 16V X7R-CERM 402
C3905 0.1UF 10% 16V X7R-CERM 402
C3910 0.1UF 10% 16V X7R-CERM 402
C3911 0.1UF 10% 16V X7R-CERM 402
R3910 4.7K 5% 1/16W MF-LF 402
C3915 4.7UF 10% 6.3V X5R-CERM 603
C3916 0.1UF 10% 16V X7R-CERM 402

BCM57765 R3940 4.7K 5% 1/16W MF-LF 402
BCM57765 R3941 4.7K 5% 1/16W MF-LF 402
=PP3V3_S0_ENETPHY
BCM57765 R3942 1K 5% 1/16W MF-LF 402

C3950 0.1UF 10% 16V X5R 402 — PCIE_ENET_D2R_N
C3951 0.1UF 10% 16V X5R 402 — PCIE_ENET_D2R_P
C3955 0.1UF 10% 16V X5R 402 — PCIE_ENET_R2D_C_P
C3956 0.1UF 10% 16V X5R 402 — PCIE_ENET_R2D_C_N

BCM57765 R3943 0 5% 1/16W MF-LF 402 — =ENET_WAKE_L (See note)

WAKE#
Must isolate from PCIe WAKE# if PHY is powered-down in S3/S5. Standard N-channel FET isolation suggested. If PHY is always powered then alias =ENET_WAKE_L to PCIE_WAKE_L.

CRITICAL L3920 FERR-600-OHM-0.5A SM — =PP1V2_ENET_PHY
396mA (1000base-T, Caesar II)

CRITICAL L3925 FERR-600-OHM-0.5A SM — PP1V2_ENET_PHY_PCIEPLL (MIN_LINE_WIDTH=0.4 mm, MIN_NECK_WIDTH=0.2 mm, VOLTAGE=1.2V)

CRITICAL L3930 FERR-600-OHM-0.5A SM — PP1V2_ENET_PHY_GPHYPLL (MIN_LINE_WIDTH=0.4 mm, MIN_NECK_WIDTH=0.2 mm, VOLTAGE=1.2V)

PP1V2_ENET_PHY_AVDDL (MIN_LINE_WIDTH=0.4 mm, MIN_NECK_WIDTH=0.2 mm, VOLTAGE=1.2V)

C3921 0.1UF 10% 16V X7R-CERM 402
C3920 4.7UF 10% 6.3V X5R-CERM 603
C3926 0.1UF 10% 16V X7R-CERM 402
C3925 4.7UF 10% 6.3V X5R-CERM 603
C3931 0.1UF 10% 16V X7R-CERM 402
C3930 4.7UF 10% 6.3V X5R-CERM 603
C3936 0.1UF 10% 16V X7R-CERM 402
C3935 10UF 10% 6.3V X5R 805

CRITICAL OMIT U3900 BCM5764M QFN-8X8 VERSION 2

Pin	Signal	Net	Dir
42, 48	AVDDH		
37	BIASVDDH		
17	VDDC		
7	VDDIO		
20	XTALVDDH		
56, 62	VDDIO		
14	VDDC		
15	REGCTL12		
16	VDDIO		
13	WAKE*		
39, 45, 51	AVDDL		
29, 32	PCIE_PLLVDDL		
36	GPHY_PLLVDDL		
35, 61	VDDC		
58	SMB_DATA	BCM57765_VMAIN_PRSNT	(IPD)
27	PCIE_TXD_N	PCIE_ENET_D2R_C_N	
28	PCIE_TXD_P	PCIE_ENET_D2R_C_P	
33	PCIE_RXD_P	PCIE_ENET_R2D_P	
34	PCIE_RXD_N	PCIE_ENET_R2D_N	
31	PCIE_REFCLK_P	PCIE_CLK100M_ENET_P	
30	PCIE_REFCLK_N	PCIE_CLK100M_ENET_N	
11	PERST*	ENET_RESET_L	(IPD)
12	CLKREQ*	ENET_CLKREQ_L	(OD)
3	LINKLED*	BCM57765_WAKE_L	(OD)
4	LOW_PWR	ENET_LOW_PWR	(IPD)
6	VDDC	BCM57765_SMB_CLK	
10	UART_MODE	BCM57765_SMB_DATA	(IPD-BCM5764M)
66	SCLK	BCM5764_SCLK	(IPU)
64	SI	BCM5764_MISO	(IPU)
65	SO	BCM5764_MOSI	(IPU)
63	CS*	BCM5764_CS_L	(IPU)
2	SPD100LED*	TP_BCM5764_SPD100LED_L	
67	TRAFFICLED*	TP_BCM5764_TRAFFICLED_L	
18	XTALI	BCM5764_CLK25M_XTALI	
19	XTALO	BCM5764_CLK25M_XTALO	
38	RDAC	BCM5764_RDAC	
69	THRM_PAD		

BCM5764_RDAC — R3965 1.24K 1% 1/16W MF-LF 402

Pin	Signal	Net	Dir
40	TRD0_P	ENET_MDI_P<0>	B1
41	TRD0_N	ENET_MDI_N<0>	B1
44	TRD1_P	ENET_MDI_P<1>	B1
43	TRD1_N	ENET_MDI_N<1>	B1
46	TRD2_P	ENET_MDI_P<2>	B1
47	TRD2_N	ENET_MDI_N<2>	B1
50	TRD3_P	ENET_MDI_P<3>	B1
49	TRD3_N	ENET_MDI_N<3>	B1
5	GPIO_0/SERIAL_DO	NC	
8	GPIO_1/SERIAL_DI	PP3V3R1V8_SW_SD_VIO (MIN_LINE_WIDTH=0.3 mm, MIN_NECK_WIDTH=0.2 mm, VOLTAGE=3.3V)	
9	GPIO_2	BCM57765_MEDIA_SENSE — R3972 0 5% 1/16W MF-LF 402	ENET_ENERGY_DET
1	NC	BCM57765_SD_DETECT — R3973 0 5% 1/16W MF-LF 402	SDCONN_CD
26	PCIE_VDDL	BCM57765_CR_CMD — R3974 0 5% 1/16W MF-LF 402 (PLACE_NEAR=L3999.1:1 mm)	SDCONN_CMD
21	DC0		SDCONN_CLK
25	DC4		SDCONN_DATA<0>
24	DC3		SDCONN_DATA<1>
23	DC2		SDCONN_DATA<2>
22	DC1		SDCONN_DATA<3>
52	NC	BCM57765_CR_DATA<4> — R3975 0 5% 1/16W MF-LF 402	SDCONN_DATA<4>
53	VMAIN_PRSNT	BCM57765_CR_DATA<5> — R3976 0 5% 1/16W MF-LF 402	SDCONN_DATA<5>
54	VAUX_PRSNT	BCM57765_CR_DATA<6> — R3977 0 5% 1/16W MF-LF 402	SDCONN_DATA<6>
55	VDDC	BCM57765_CR_DATA<7> — R3978 0 5% 1/16W MF-LF 402	SDCONN_DATA<7>
59	SMB_CLK	BCM57765_CE_L_MS_INS_L	
60	ENERGY_DET	BCM57765_CR_LED	
57	DC5		SDCONN_WP
68	SPD1000LED*	TP_BCM57765_XD_DET	

CR_BUS_PWR is not for SD Card power, just decoupling for BCM57765 CR I/Os.
BCM57765 C3970 4.7UF 10% 6.3V X5R-CERM 603 — BCM57765 C3971 0.1UF 10% 16V X7R-CERM 402 — BCM57765 C3972 0.1UF 10% 16V X7R-CERM 402

All resistors above BOMOPTIONed BCM57765
BCM57765 supports both active-levels for WP.

PHY Non-Volatile Memory

ROM contains MAC address, PCIe config info as well as code for Bonjour proxy. Required for proper PHY operation. (Required ROM size TBD)

=PP3V3_ENET_PHY
U3990 AT45DB011D SOIC-8S1 OMIT
VCC, SCK, CS*, WP*, RESET*, GND, SI, SO
C3990 0.1UF 10% 16V X7R-CERM 402
BCM5764_SCLK — SCK
BCM5764_CS_L — CS*
BCM5764_MOSI — SI
BCM5764_MISO — SO
BCM57765 R3990 4.7K 5% 1/16W MF-LF 402
BCM5764M R3997 4.7K 5% 1/16W MF-LF 402

NOTE: Pull-down on SO plus internal pull-ups on other 3 SPI pins configures BCM57765 for the Atmel AT45DB011D (1Mbit) ROM. If a different ROM is used then the straps must change.
NOTE: BCM5764M requires SI pull-down instead of SO.

BCM5764M Support

All parts below BOMOPTIONed BCM5764M

BCM5764M pin-function	Net	Part	Value	Other side
60-ENERGY_DET	BCM57765_CR_LED	R3980	0	ENET_ENERGY_DET
13-WAKE*	BCM57765_SR_VFB	R3981	0	=ENET_WAKE_L (See note)
53-VMAIN_PRSNT	BCM57765_CR_DATA<5>	R3982	1K	=PP3V3_S0_ENETPHY
59-SMB_CLK	BCM57765_CE_L_MS_INS_L	R3983	4.7K	=PP3V3_ENET_PHY
58-SMB_DATA	BCM57765_VMAIN_PRSNT	R3984	4.7K	
54-VAUX_PRSNT	BCM57765_CR_DATA<6>	R3985	1K	
16-VDDIO	BCM57765_SR_LX	R3986	0	
20-XTALVDDH	BCM57765_VDDO_PIN20	R3987	0	PP3V3_ENET_PHY_XTALVDDH
55-VDDC	BCM57765_CR_DATA<7>	R3988	0	=PP1V2_ENET_PHY
17-VDDC	BCM57765_XTALVDDH	R3989	0	
14-VDDC	BCM57765_SR_VDD	R3998	0	
06-VDDC	BCM57765_SMB_CLK	R3999	0	
26-PCIE_VDDL	BCM57765_CR_CMD	L3999 FERR-600-OHM-0.5A SM CRITICAL (PLACE_NEAR=U3900.26:2 mm)		

Keep net short, with no stubs.
BCM5764M C3999 0.1UF 10% 16V X7R-CERM 402 (PLACE_NEAR=U3900.26:1 mm)
BCM5764M C3998 4.7UF 10% 6.3V X5R-CERM 603 (PLACE_NEAR=L3999.1:1 mm)

SYNC_MASTER=T27_MLB SYNC_DATE=08/20/2009

PAGE TITLE: Ethernet PHY (Caesar II/IV)

Apple Inc.

DRAWING NUMBER: 051-8563 SIZE: D
REVISION: A.13.0
BRANCH:
PAGE: 39 OF 109
SHEET: 31 OF 80

NOTICE OF PROPRIETARY PROPERTY:
THE INFORMATION CONTAINED HEREIN IS THE PROPRIETARY PROPERTY OF APPLE COMPUTER, INC.
THE POSESSOR AGREES TO THE FOLLOWING:
I TO MAINTAIN THIS DOCUMENT IN CONFIDENCE
II NOT TO REPRODUCE OR COPY IT
III NOT TO REVEAL OR PUBLISH IT IN WHOLE OR PART
IV ALL RIGHTS RESERVED

www.vinafix.vn

http://24hcongnghe.org

Page Notes

Power aliases required by this page:
(NONE)

Signal aliases required by this page:
(NONE)

BOM options provided by this page:
(NONE)

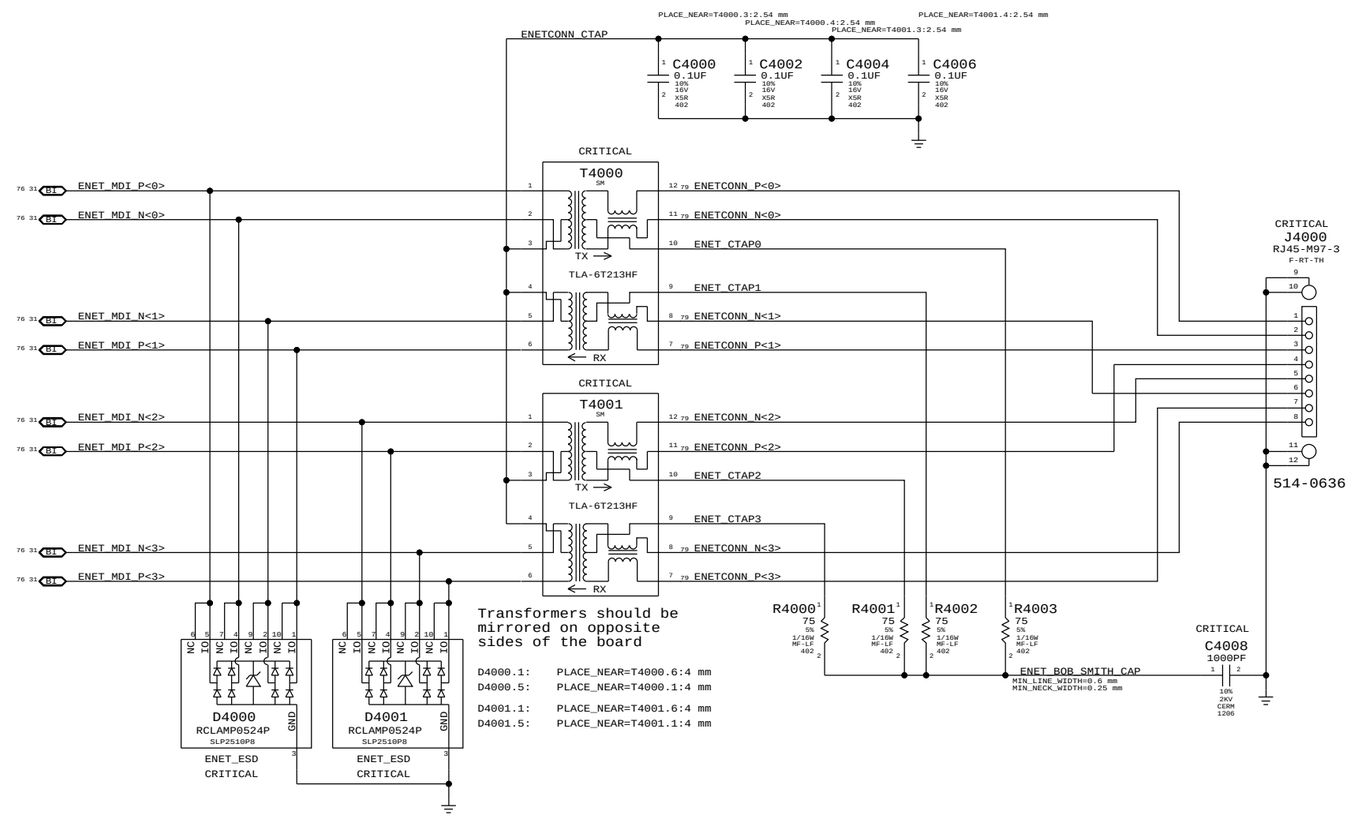

SYNC MASTER=T27_MLB SYNC DATE=07/28/2009

PAGE TITLE: Ethernet Connector

Apple Inc.

DRAWING NUMBER: 051-8563 SIZE: D

REVISION: A.13.0

BRANCH:

PAGE: 40 OF 109

SHEET: 32 OF 80

NOTICE OF PROPRIETARY PROPERTY:
THE INFORMATION CONTAINED HEREIN IS THE PROPRIETARY PROPERTY OF APPLE COMPUTER, INC.
THE POSESSOR AGREES TO THE FOLLOWING:
I TO MAINTAIN THIS DOCUMENT IN CONFIDENCE
II NOT TO REPRODUCE OR COPY IT
III NOT TO REVEAL OR PUBLISH IT IN WHOLE OR PART
IV ALL RIGHTS RESERVED

www.vinafix.vn

http://24hcongnghe.org

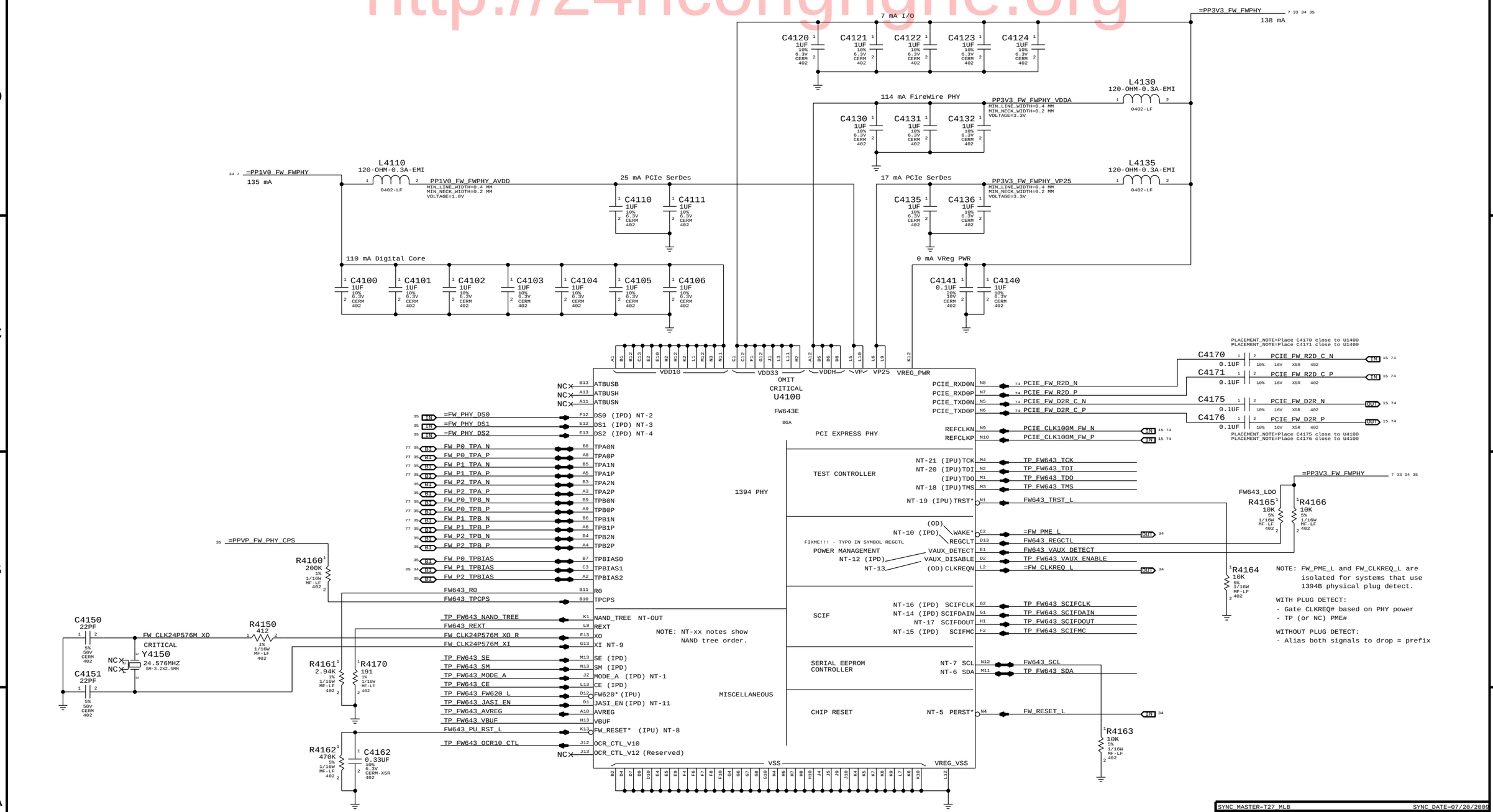

SYNC MASTER=T27_MLB SYNC DATE=07/20/2005

PAGE TITLE
FireWire LLC/PHY (FW643E)

Apple Inc.

DRAWING NUMBER 051-8563 SIZE D

REVISION A.13.0

BRANCH

PAGE 41 OF 109

SHEET 33 OF 80

NOTICE OF PROPRIETARY PROPERTY:
THE INFORMATION CONTAINED HEREIN IS THE PROPRIETARY PROPERTY OF APPLE COMPUTER, INC.
THE POSESSOR AGREES TO THE FOLLOWING:
I TO MAINTAIN THIS DOCUMENT IN CONFIDENCE
II NOT TO REPRODUCE OR COPY IT
III NOT TO REVEAL OR PUBLISH IT IN WHOLE OR PART
IV ALL RIGHTS RESERVED

www.vinafix.vn

http://24hconghghe.org

Page Notes

Power aliases required by this page:
- =PPBUS_S5_FWPWRSW (FW VP FET Input)
- =PPBUS_FW_FET (FW VP FET Output)
- =PP3V3_FW_P3V3FWFET (3.3V FET Input)
- =PP3V3_FW_FET (3.3V FET Output)
- =PP3V3_FW_FWPHY (PHY 3.3V Power)
- =PP3V3_S0_FWLATEVG
- =PP3V3_S0_FWPWRCTL
- =PP1V05_S0_FWPWRCTL (5KPD Bias Rail)
- =PP1V05_FW_P1V0FWFET (1.0V FET Input)
- =PP1V0_FW_FET_R (1.0V FET Output)
- =PP1V0_FW_FWPHY (PHY 1.0V)

Signal aliases required by this page:
- =FW_CLKREQ_L
- =FW_PME_L

BOM options provided by this page:
(NONE)

FireWire Port Power Switch

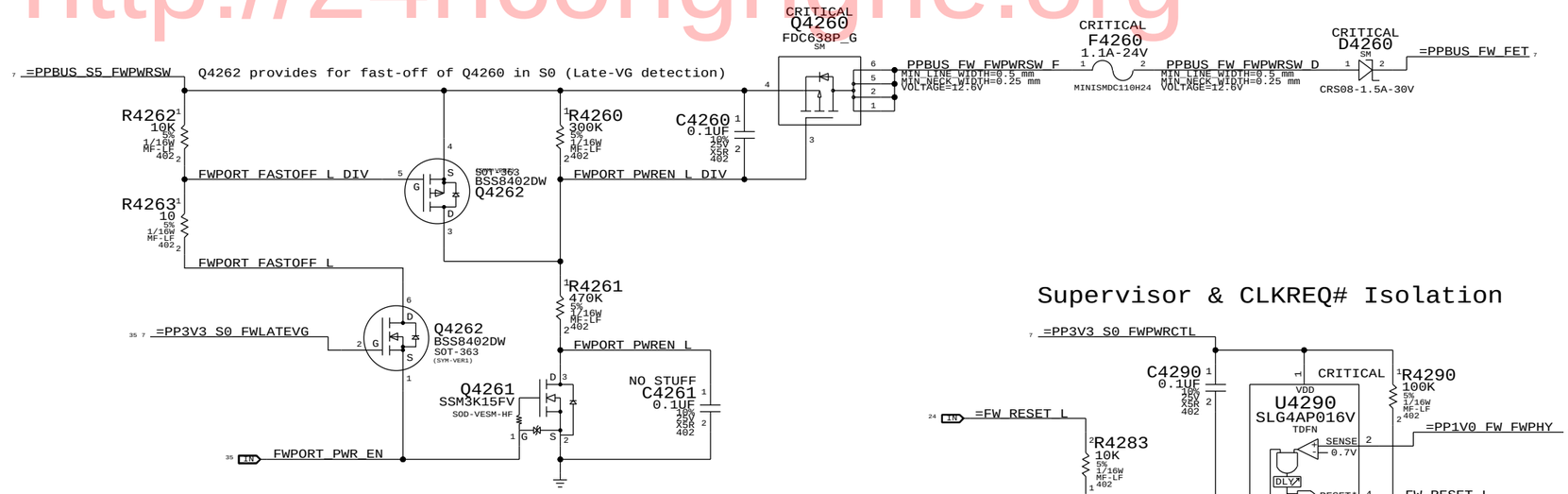

Supervisor & CLKREQ# Isolation

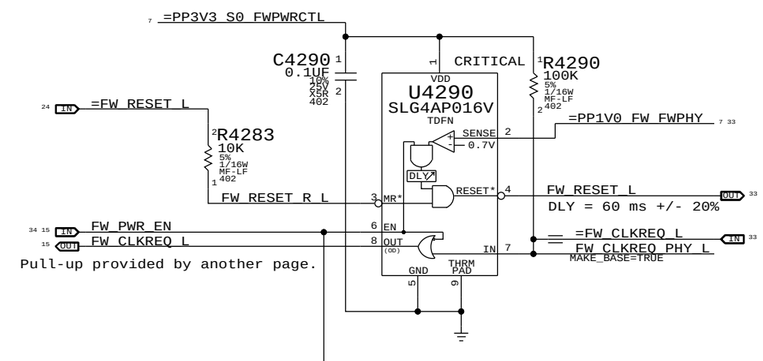

FireWire Port 5K Pull-Down Detect

All FireWire devices require 5K pull-down on TPB pair.
Host can detect as load on TPBIAS signal.
Current source only active when FW_PWR_EN is low.

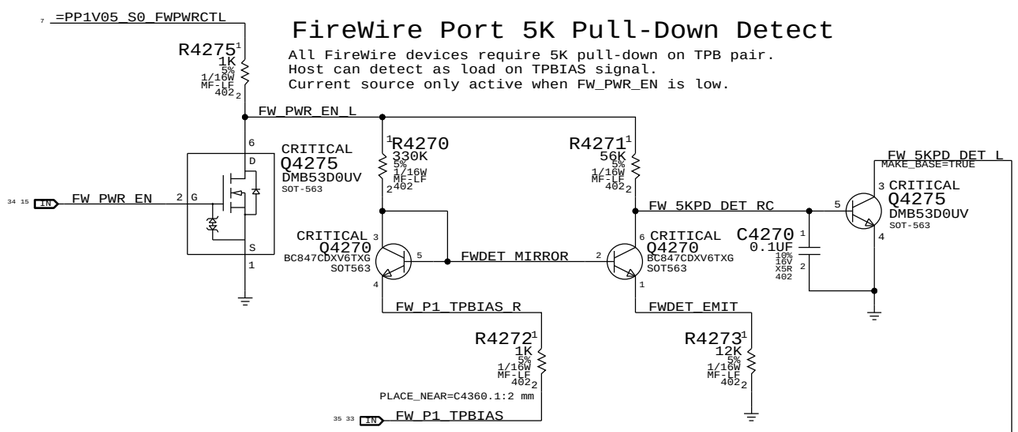

FireWire PHY WAKE# Support

When PHY is powered, FW_5KPD_DET_L acts as legacy PME# signal.

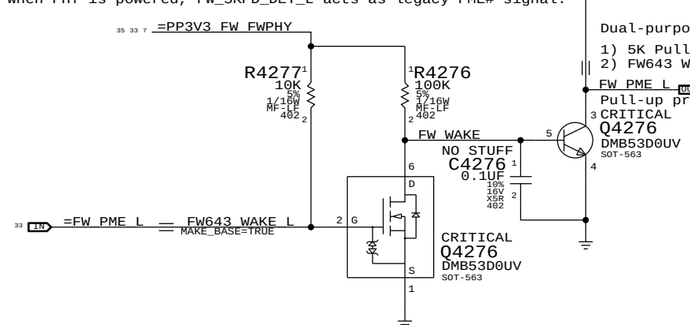

Dual-purpose output:
1) 5K Pull-down Detect when FW_PWR_EN is low.
2) FW643 WAKE# (PME#) when PHY is powered.

FW_PME_L
Pull-up provided on another page.

3.3V FW Switch

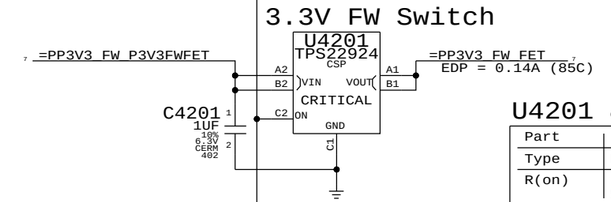

U4201 & U4202

Part	TPS22924C
Type	Load Switch
R(on)	18 mOhm Typ 50 mOhm Max

Max Output: 2A

1.0V FW Switch

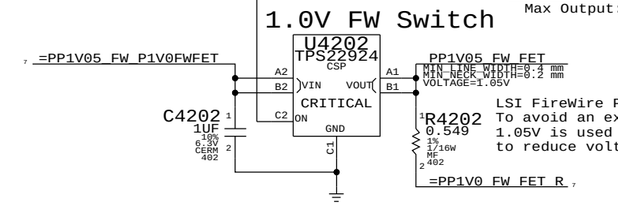

LSI FireWire PHY requires 1.0V.
To avoid an extra power supply,
1.05V is used with a series R
to reduce voltage.

TEXT NOTE FOR 3.3V RAIL CURRENT CHANGED TO EDP NUMBER.

SYNC_MASTER=T27_MLB SYNC_DATE=12/15/2009

PAGE TITLE: FireWire Port & PHY Power

Apple Inc.

DRAWING NUMBER: 051-8563 SIZE: D
REVISION: A.13.0
BRANCH:
PAGE: 42 OF 109
SHEET: 34 OF 80

NOTICE OF PROPRIETARY PROPERTY:
THE INFORMATION CONTAINED HEREIN IS THE PROPRIETARY PROPERTY OF APPLE COMPUTER, INC.
THE POSESSOR AGREES TO THE FOLLOWING:
I TO MAINTAIN THIS DOCUMENT IN CONFIDENCE
II NOT TO REPRODUCE OR COPY IT
III NOT TO REVEAL OR PUBLISH IT IN WHOLE OR PART
IV ALL RIGHTS RESERVED

www.vinafix.vn

http://24hconghe.org

Page Notes

Power aliases required by this page:
- =PPVP_FW_PORT1
- =PPVP_FW_PHY_CPS_FET (From Port)
- =PPVP_FW_PHY_CPS (To PHY)
- =PP3V3_FW_FWPHY
- =PP3V3_S0_FWLATEVG

Signal aliases required by this page:
- =FW_PHY_DS0
- =FW_PHY_DS1
- =FW_PHY_DS2

NOTE: This page is expected to contain the necessary aliases to map the FireWire TPA/TPB pairs to their appropriate connectors and/or to properly terminate unused signals.

BOM options provided by this page:
(NONE)

1394b implementation based on Apple FireWire Design Guide (FWDG 0.6, 5/14/03)

FW643 TPCPS Leakage Protection

FW643 has internal leakage path from TPCPS pin to VDD33.
FET blocks current to TPCPS until VDD33 is powered.

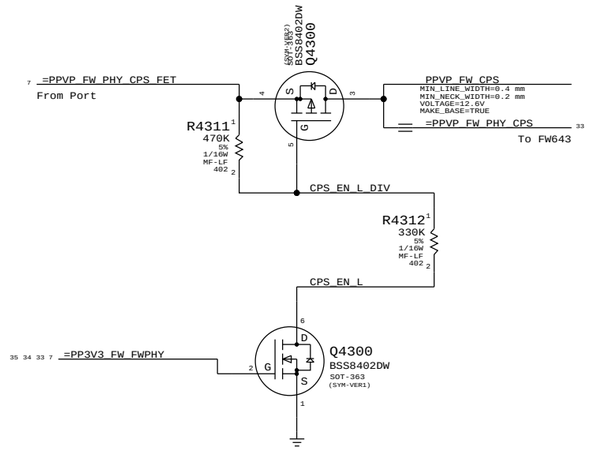

Unused FireWire Ports

Disabled per LSI instructions
(All unused port signals TP/NC)

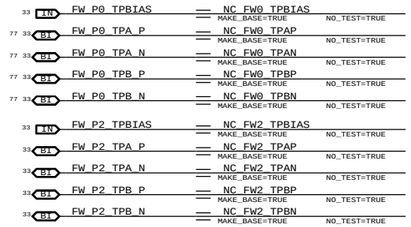

FireWire PHY Config Straps

Configures PHY for:
- Port "1" Bilingual (1394B)

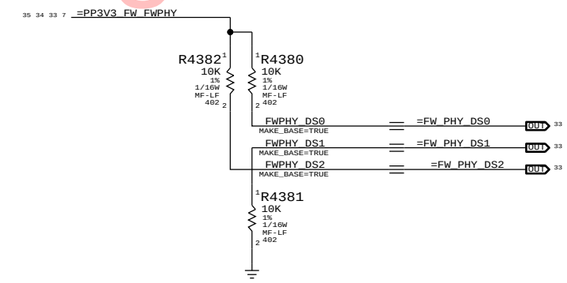

Termination

Place close to FireWire PHY

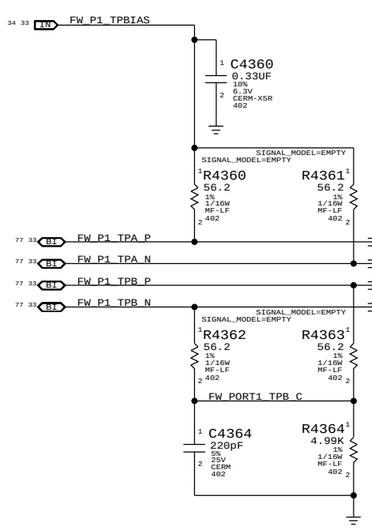

Cable Power

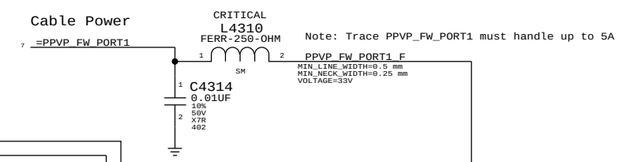

Note: Trace PPVP_FW_PORT1 must handle up to 5A

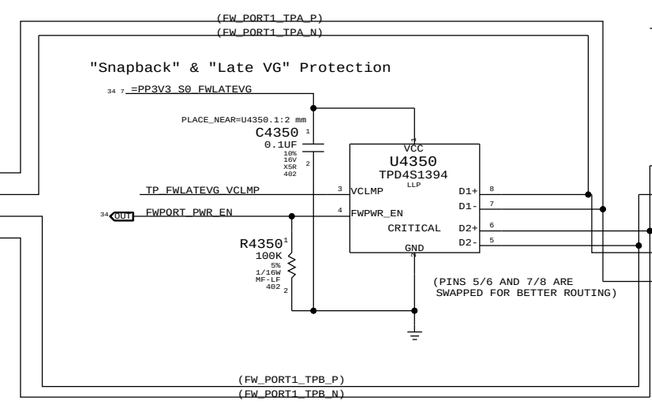

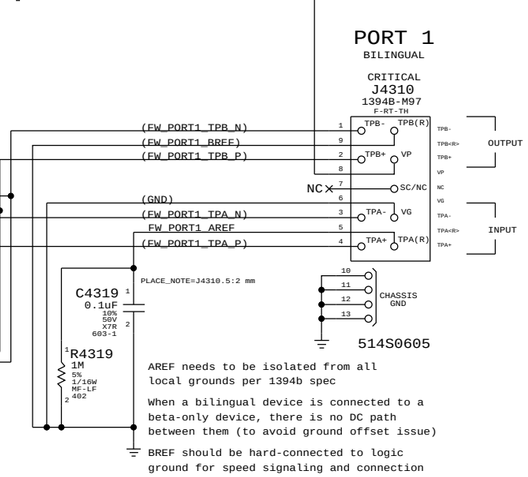

AREF needs to be isolated from all local grounds per 1394b spec

When a bilingual device is connected to a beta-only device, there is no DC path between them (to avoid ground offset issue)

BREF should be hard-connected to logic ground for speed signaling and connection

CANNOT SYNC THIS PAGE FROM T27, TPA AND TPB FOR U4350 IS SWAPPED

SYNC_MASTER=T27_MLB	SYNC_DATE=07/28/2009
PAGE TITLE: FireWire Connector	
Apple Inc.	DRAWING NUMBER 051-8563 SIZE D
	REVISION A.13.0
NOTICE OF PROPRIETARY PROPERTY: THE INFORMATION CONTAINED HEREIN IS THE PROPRIETARY PROPERTY OF APPLE COMPUTER, INC. THE POSESSOR AGREES TO THE FOLLOWING: I TO MAINTAIN THIS DOCUMENT IN CONFIDENCE II NOT TO REPRODUCE OR COPY IT III NOT TO REVEAL OR PUBLISH IT IN WHOLE OR PART IV ALL RIGHTS RESERVED	BRANCH
	PAGE 43 OF 109
	SHEET 35 OF 80

www.vinafix.vn

http://24hcongnghe.org

ODD Power Control

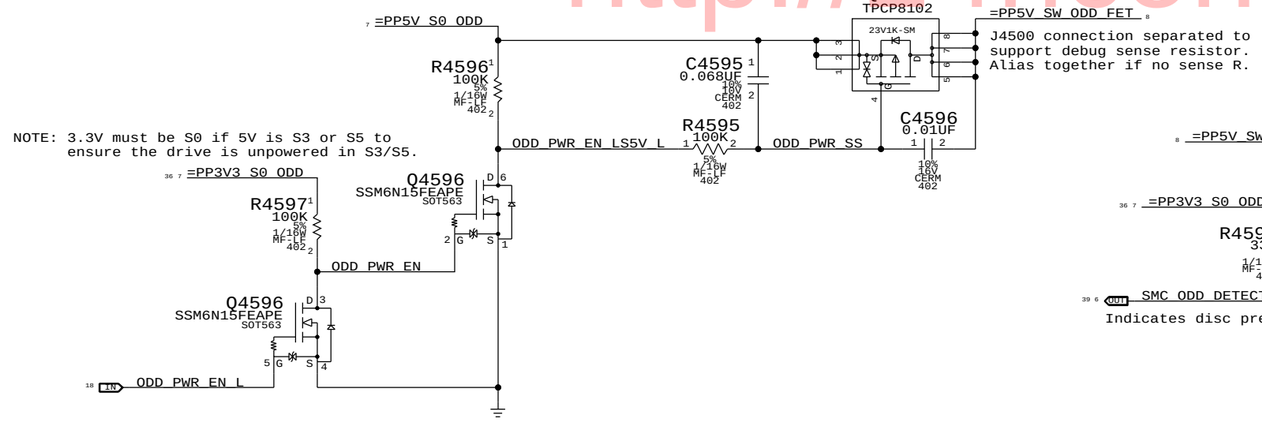

SATA ODD Port

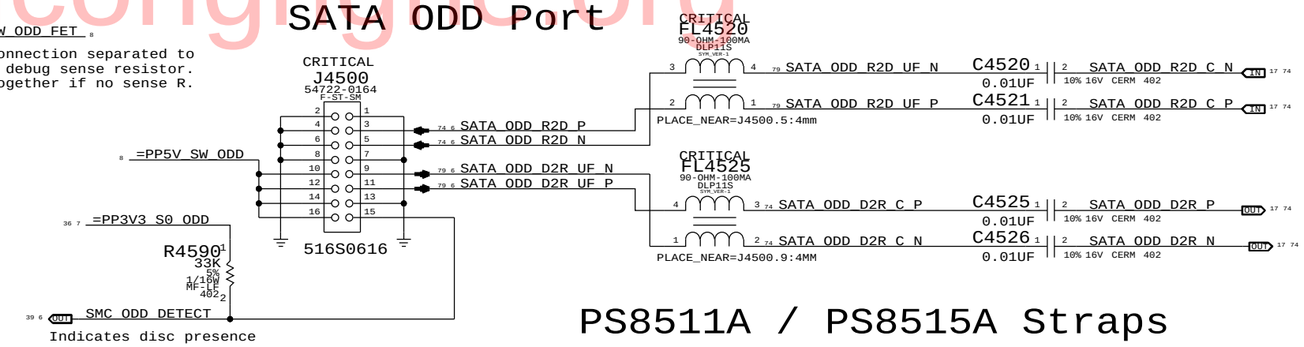

PS8511A / PS8515A Straps

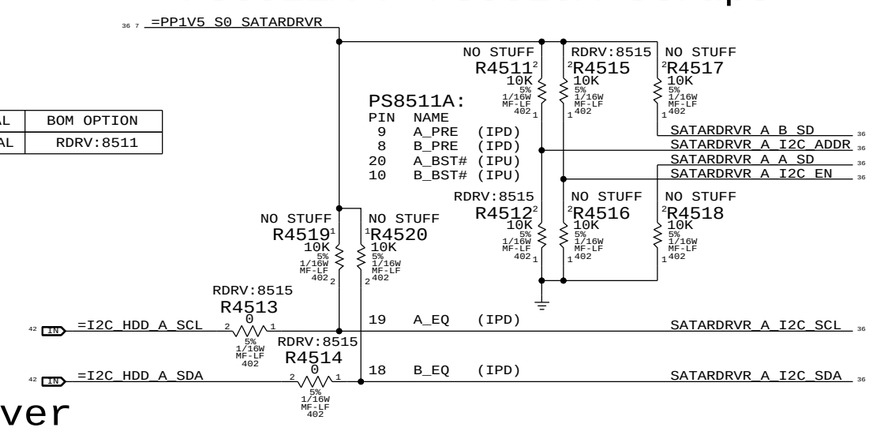

PART NUMBER	QTY	DESCRIPTION	REFERENCE DES	CRITICAL	BOM OPTION
338S0769	1	SATA 3GB/S REDRIVER, LOW POWER	U4510	CRITICAL	RDRV:8511

BOMOPTIONs:
- RDRV:8511 stuffs PS8511A & associated parts (STRAPS TBD!!!)
- RDRV:8515 stuffs PS8515A & associated parts
- RDRV:NO stuffs bypass path (neither IC or associated parts stuffed)

SATA HDD Port

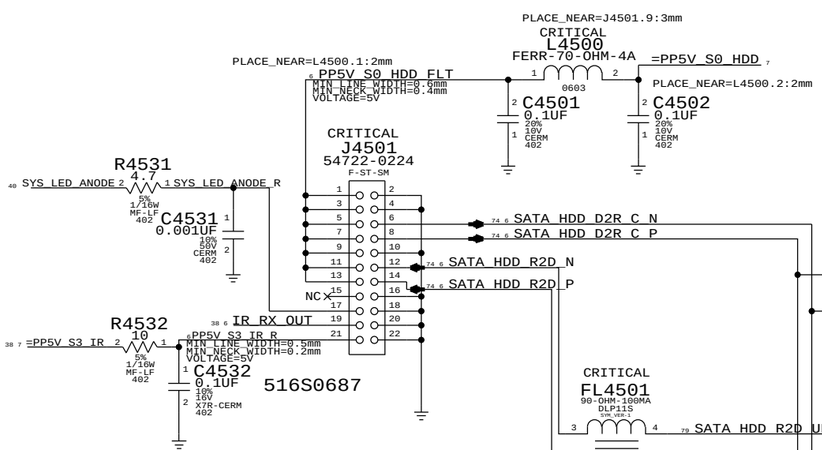

SATA Redriver

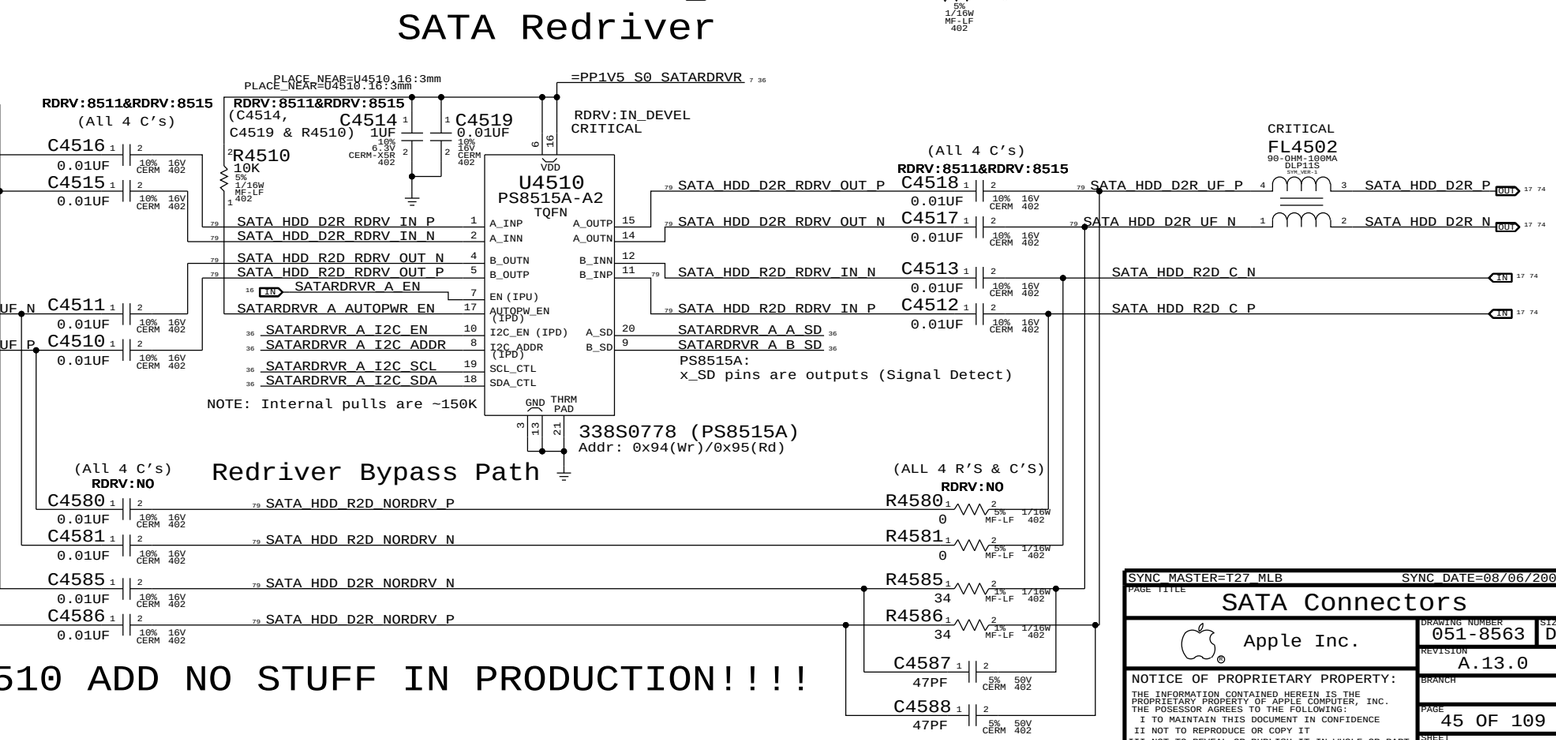

Redriver Bypass Path

U4510 ADD NO STUFF IN PRODUCTION!!!!

J5401 PINOUTS ARE DIFFERENT FOR K6, DO NOT SYNC THIS PAGE FROM T27 DIRECTLY

SYNC MASTER=T27_MLB SYNC DATE=08/06/2009

PAGE TITLE: SATA Connectors

Apple Inc.

DRAWING NUMBER: 051-8563 SIZE: D

REVISION: A.13.0

BRANCH

PAGE: 45 OF 109

SHEET: 36 OF 80

NOTICE OF PROPRIETARY PROPERTY:
THE INFORMATION CONTAINED HEREIN IS THE PROPRIETARY PROPERTY OF APPLE COMPUTER, INC.
THE POSESSOR AGREES TO THE FOLLOWING:
I TO MAINTAIN THIS DOCUMENT IN CONFIDENCE
II NOT TO REPRODUCE OR COPY IT
III NOT TO REVEAL OR PUBLISH IT IN WHOLE OR PART
IV ALL RIGHTS RESERVED

www.vinafix.vn

http://24hcongnghe.org

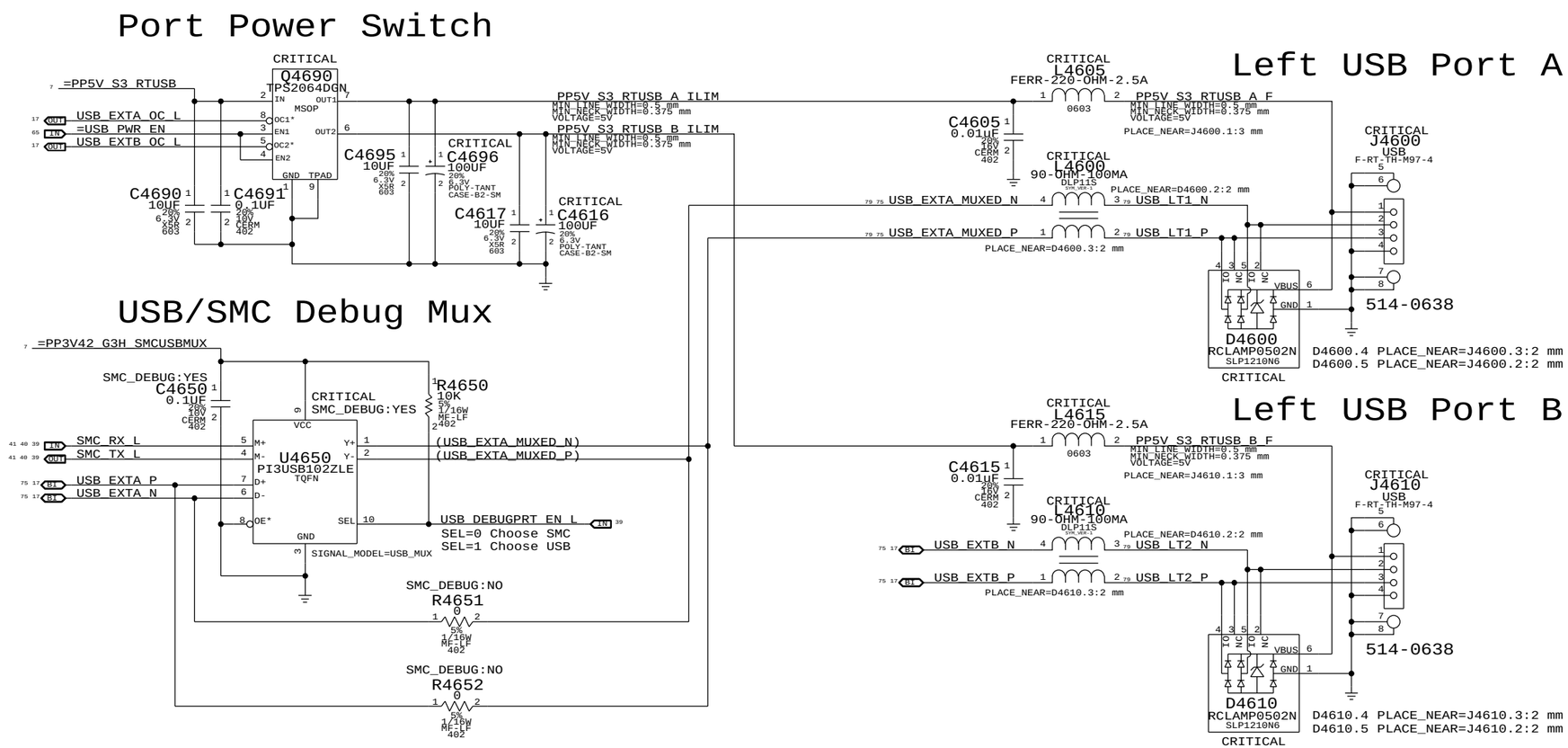

SYNC_MASTER=T27_MLB SYNC_DATE=08/27/2009

PAGE TITLE
External USB Connectors

Apple Inc.

DRAWING NUMBER 051-8563 SIZE D

REVISION A.13.0

BRANCH

PAGE 46 OF 109

SHEET 37 OF 80

NOTICE OF PROPRIETARY PROPERTY:
THE INFORMATION CONTAINED HEREIN IS THE PROPRIETARY PROPERTY OF APPLE COMPUTER, INC.
THE POSESSOR AGREES TO THE FOLLOWING:
I TO MAINTAIN THIS DOCUMENT IN CONFIDENCE
II NOT TO REPRODUCE OR COPY IT
III NOT TO REVEAL OR PUBLISH IT IN WHOLE OR PART
IV ALL RIGHTS RESERVED

www.vinafix.vn

http://24hcongnghe.org

IR Support

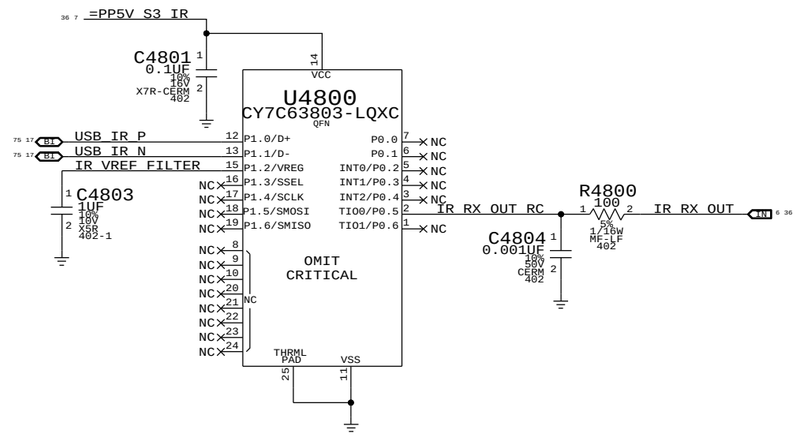

T57 Connector

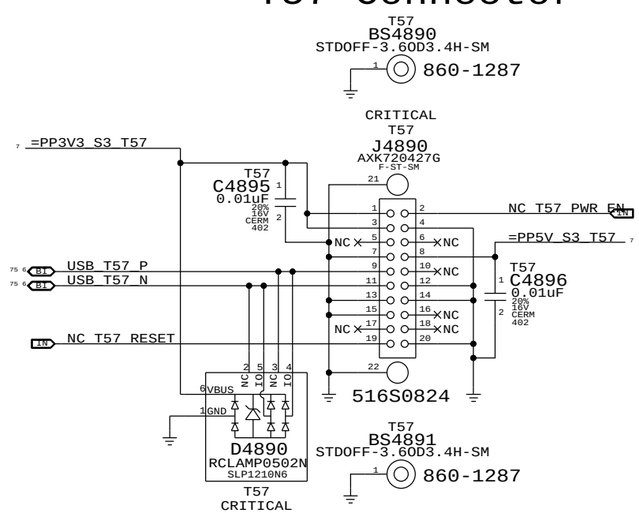

K6 NOTES : D4890 CONNECTION IS DIFFERENT,CANNOT DIRECTLY SYNC FROM T27

SYNC MASTER=T27 MLB SYNC DATE=08/27/2009

PAGE TITLE
Internal USB Support

Apple Inc.

DRAWING NUMBER 051-8563 SIZE D

REVISION A.13.0

BRANCH

PAGE 48 OF 109

SHEET 38 OF 80

NOTICE OF PROPRIETARY PROPERTY:
THE INFORMATION CONTAINED HEREIN IS THE PROPRIETARY PROPERTY OF APPLE COMPUTER, INC.
THE POSESSOR AGREES TO THE FOLLOWING:
I TO MAINTAIN THIS DOCUMENT IN CONFIDENCE
II NOT TO REPRODUCE OR COPY IT
III NOT TO REVEAL OR PUBLISH IT IN WHOLE OR PART
IV ALL RIGHTS RESERVED

www.vinafix.vn

http://24hcongnghe.org

NOTE: Unused pins have "SMC_Pxx" names. Unused pins designed as outputs can be left floating, those designed as inputs require pull-ups.

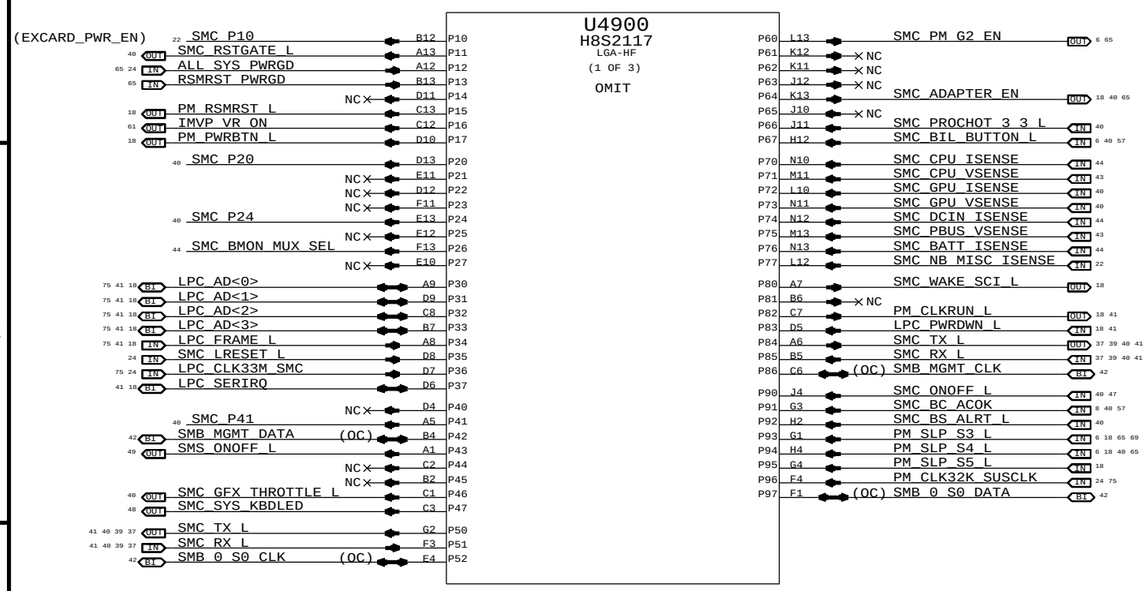

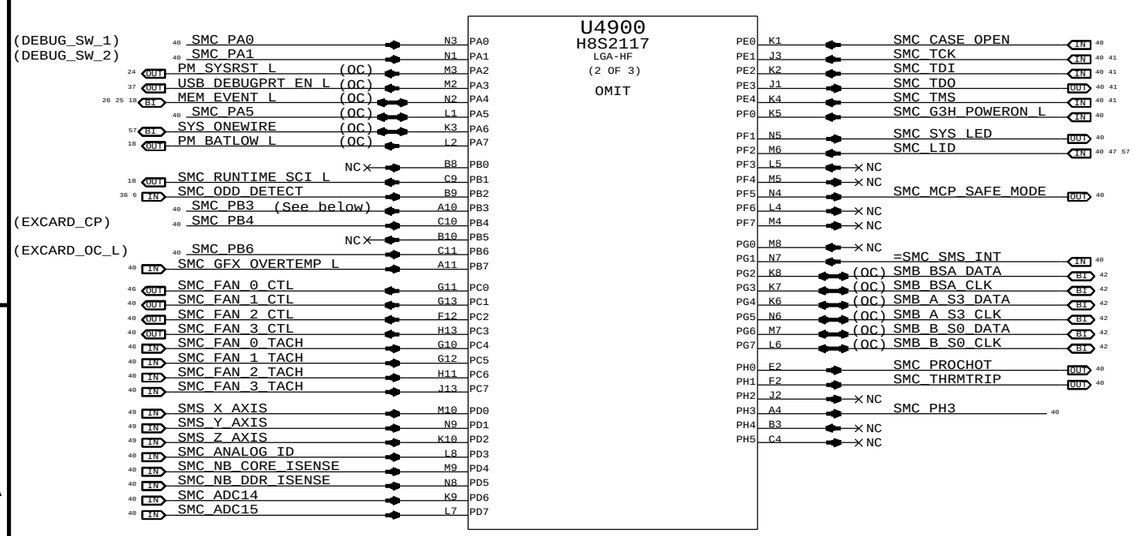

SMC_PB3:

SMC_IG_THROTTLE_L for MG systems.
Otherwise, TP/NC okay.

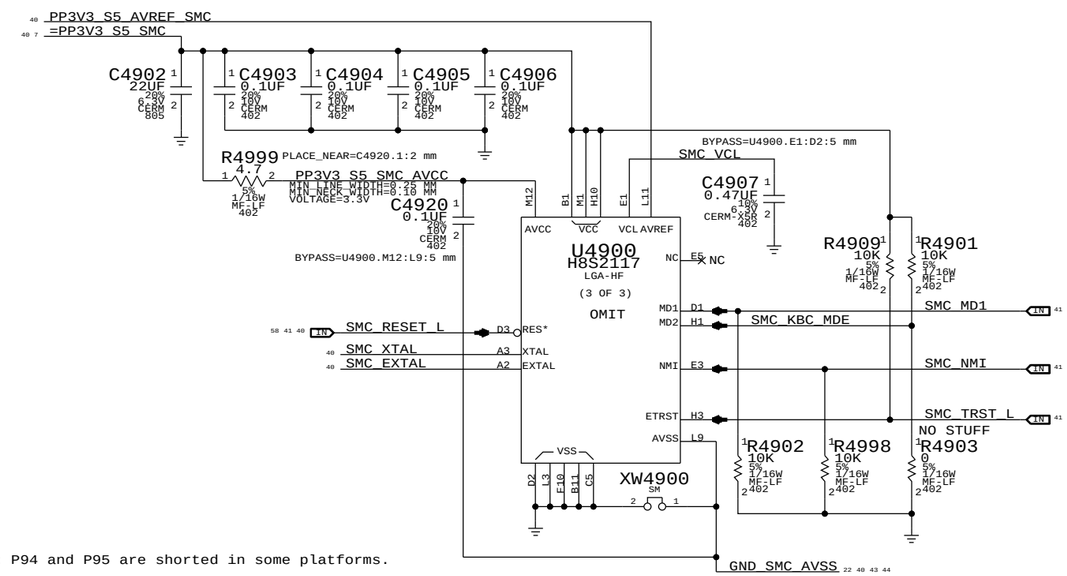

NOTE: P94 and P95 are shorted in some platforms.

NOTE: SMS Interrupt can be active high or low, rename net accordingly.
If SMS interrupt is not used, pull up to SMC rail.

H8S2117-R:
(SMC_PECI)
(SMC_PECI_VREF)
(SMC_PECI_VSTP)

SYNC MASTER=T27 MLB	SYNC DATE=09/02/2009
PAGE TITLE: SMC	
Apple Inc.	DRAWING NUMBER 051-8563 SIZE D
	REVISION A.13.0
NOTICE OF PROPRIETARY PROPERTY: THE INFORMATION CONTAINED HEREIN IS THE PROPRIETARY PROPERTY OF APPLE COMPUTER, INC. THE POSESSOR AGREES TO THE FOLLOWING: I TO MAINTAIN THIS DOCUMENT IN CONFIDENCE II NOT TO REPRODUCE OR COPY IT III NOT TO REVEAL OR PUBLISH IT IN WHOLE OR PART IV ALL RIGHTS RESERVED	BRANCH
	PAGE 49 OF 109
	SHEET 39 OF 80

www.vinafix.vn

http://24hcongnghe.org

SMC Reset "Button", Supervisor & AVREF Supply

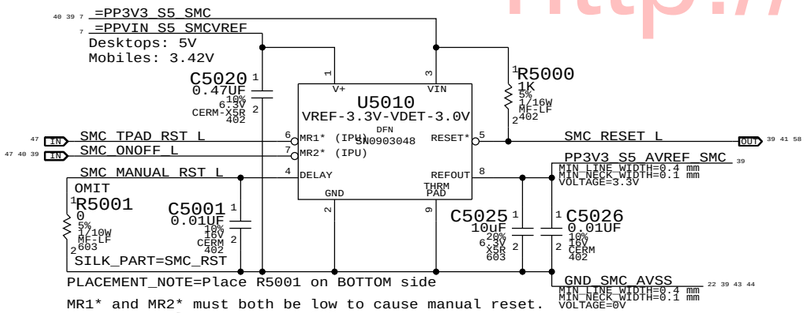

MR1* and MR2* must both be low to cause manual reset.
Used on mobiles to support SMC reset via keyboard.

NOTE: Internal pull-ups are to VIN, not V+.

SMC FSB to 3.3V Level Shifting

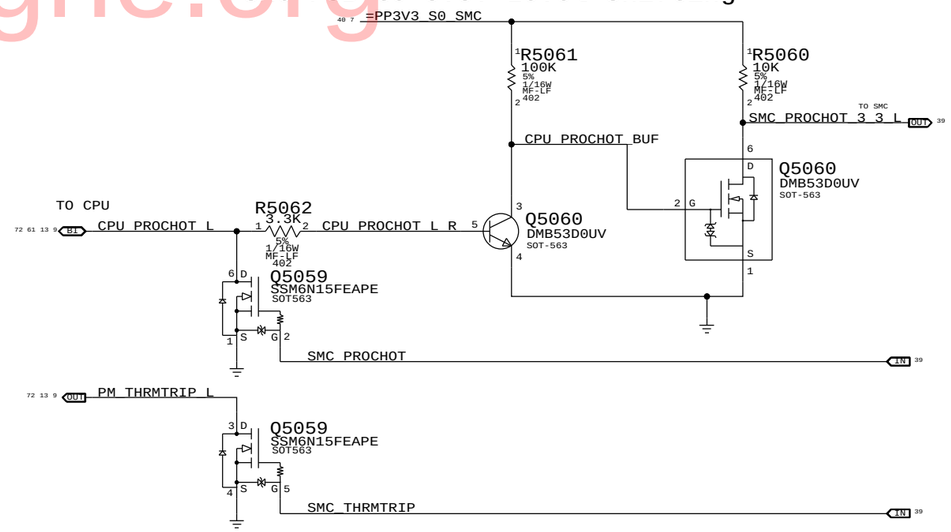

Debug Power "Buttons"

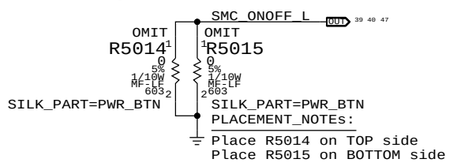

SMC Crystal Circuit

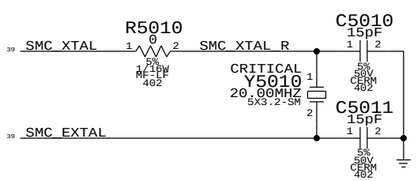

SMC Aliases

SMC_MCP_VSENSE (MAKE_BASE=TRUE)	=	SMC_ADC14
SMC_CPU_FSB_ISENSE (MAKE_BASE=TRUE)	=	SMC_ADC15
SMC_MCP_CORE_ISENSE (MAKE_BASE=TRUE)	=	SMC_NB_CORE_ISENSE
SMC_MCP_DDR_ISENSE (MAKE_BASE=TRUE)	=	SMC_NB_DDR_ISENSE
TP_SMC_GPU_1V8_ISENSE (MAKE_BASE=TRUE)	=	SMC_ANALOG_ID
TP_SMC_GPU_ISENSE (MAKE_BASE=TRUE)	=	SMC_GPU_ISENSE
TP_SMC_GPU_VSENSE (MAKE_BASE=TRUE)	=	SMC_GPU_VSENSE
SMC_GFX_THROTTLE_L	=	SMC_IG_THROTTLE_L (MAKE_BASE=TRUE)
SMS_INT_L (MAKE_BASE=TRUE)	=	=SMC_SMS_INT
MCP_WAKE_REQ_L	=	SMC_G3H_POWERON_L (MAKE_BASE=TRUE)
SMC_MCP_SAFE_MODE	R5096 0 5% 1/16W MF-LF 402	MCP_SPKR

SMC Pull-ups

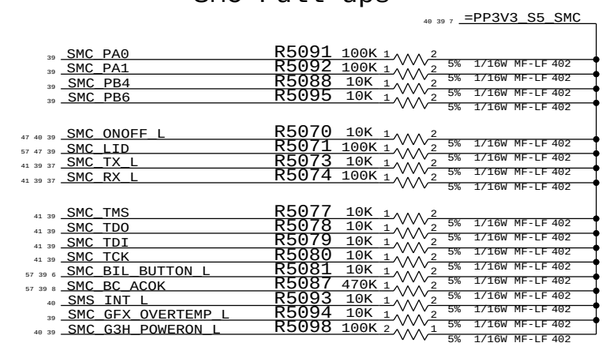

System (Sleep) LED Circuit

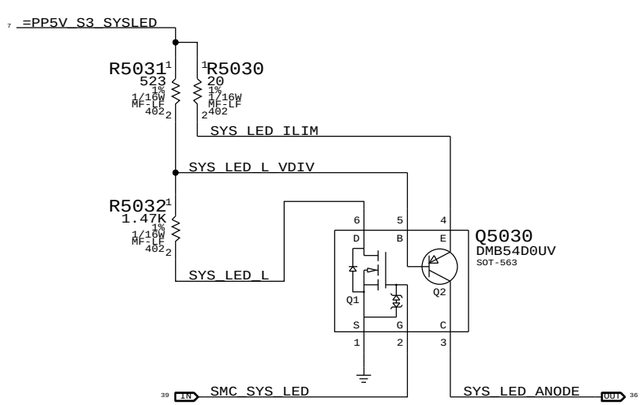

Unused Pins

SMC_FAN_1_CTL	=	TP_SMC_FAN_1_CTL (MAKE_BASE=TRUE)
TP_SMC_FAN_1_TACH (MAKE_BASE=TRUE)	=	SMC_FAN_1_TACH
SMC_FAN_2_CTL	=	NC_SMC_FAN_2_CTL (MAKE_BASE=TRUE, NO_TEST=TRUE)
NC_SMC_FAN_2_TACH (MAKE_BASE=TRUE, NO_TEST=TRUE)	=	SMC_FAN_2_TACH
SMC_FAN_3_CTL	=	NC_SMC_FAN_3_CTL (MAKE_BASE=TRUE, NO_TEST=TRUE)
NC_SMC_FAN_3_TACH (MAKE_BASE=TRUE, NO_TEST=TRUE)	=	SMC_FAN_3_TACH
SMC_RSTGATE_L	=	TP_SMC_RSTGATE_L (MAKE_BASE=TRUE)
SMC_P20	=	TP_SMC_P20 (MAKE_BASE=TRUE)
SMC_P24	=	TP_SMC_P24 (MAKE_BASE=TRUE)
SMC_P41	=	TP_SMC_P41 (MAKE_BASE=TRUE)
SMC_PB3	=	TP_SMC_PB3 (MAKE_BASE=TRUE)
SMC_PH3	=	TP_SMC_PH3 (MAKE_BASE=TRUE)

SMC Pull-downs

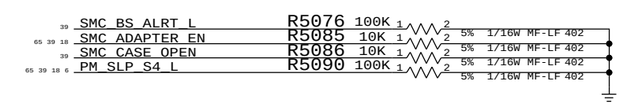

SYNC_MASTER=T27_MLB SYNC_DATE=09/02/2009

PAGE TITLE: SMC Support

Apple Inc.

DRAWING NUMBER: 051-8563 SIZE: D

REVISION: A.13.0

BRANCH

PAGE: 50 OF 109

SHEET: 40 OF 80

NOTICE OF PROPRIETARY PROPERTY:
THE INFORMATION CONTAINED HEREIN IS THE PROPRIETARY PROPERTY OF APPLE COMPUTER, INC.
THE POSESSOR AGREES TO THE FOLLOWING:
I TO MAINTAIN THIS DOCUMENT IN CONFIDENCE
II NOT TO REPRODUCE OR COPY IT
III NOT TO REVEAL OR PUBLISH IT IN WHOLE OR PART
IV ALL RIGHTS RESERVED

www.vinafix.vn

http://24hcongnghe.org

LPC+SPI Connector

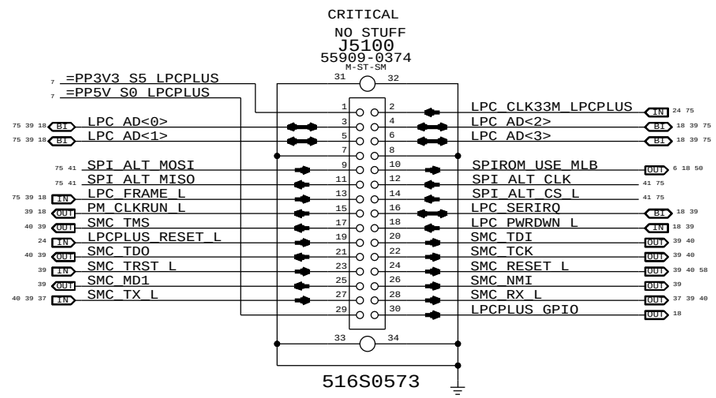

SPI Bus Series Termination

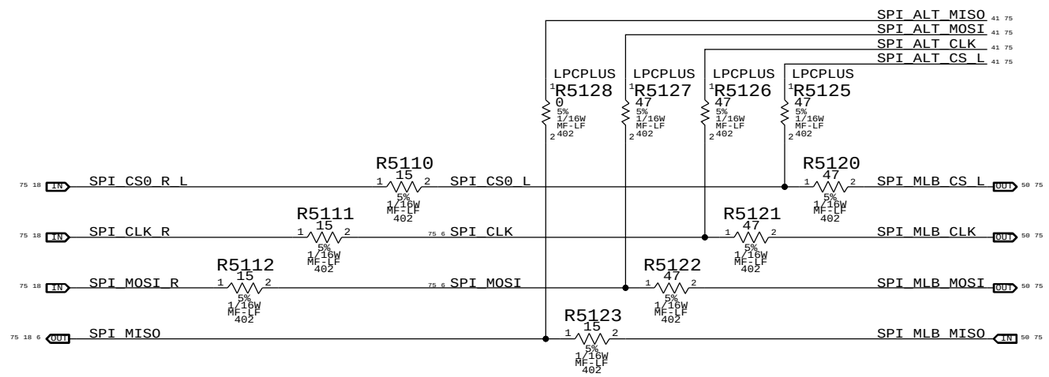

EFI Debug ROM

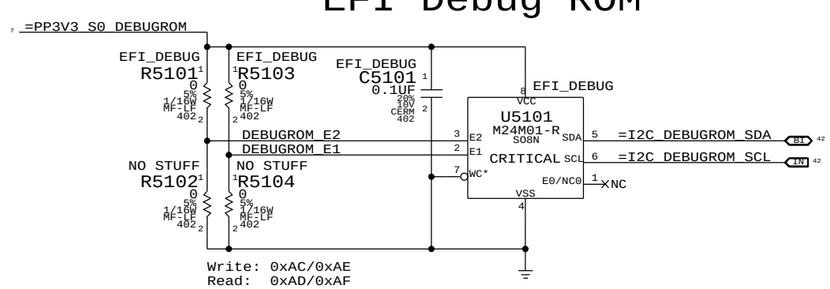

SYNC MASTER=T27 MLB SYNC DATE=08/27/2009

PAGE TITLE
LPC+SPI Debug Connector

Apple Inc.

DRAWING NUMBER 051-8563 SIZE D

REVISION A.13.0

BRANCH

PAGE 51 OF 109

SHEET 41 OF 80

NOTICE OF PROPRIETARY PROPERTY:
THE INFORMATION CONTAINED HEREIN IS THE PROPRIETARY PROPERTY OF APPLE COMPUTER, INC.
THE POSESSOR AGREES TO THE FOLLOWING:
I TO MAINTAIN THIS DOCUMENT IN CONFIDENCE
II NOT TO REPRODUCE OR COPY IT
III NOT TO REVEAL OR PUBLISH IT IN WHOLE OR PART
IV ALL RIGHTS RESERVED

www.vinafix.vn

http://24hoongnghe.org

MCP89 SMBus "0" Connections

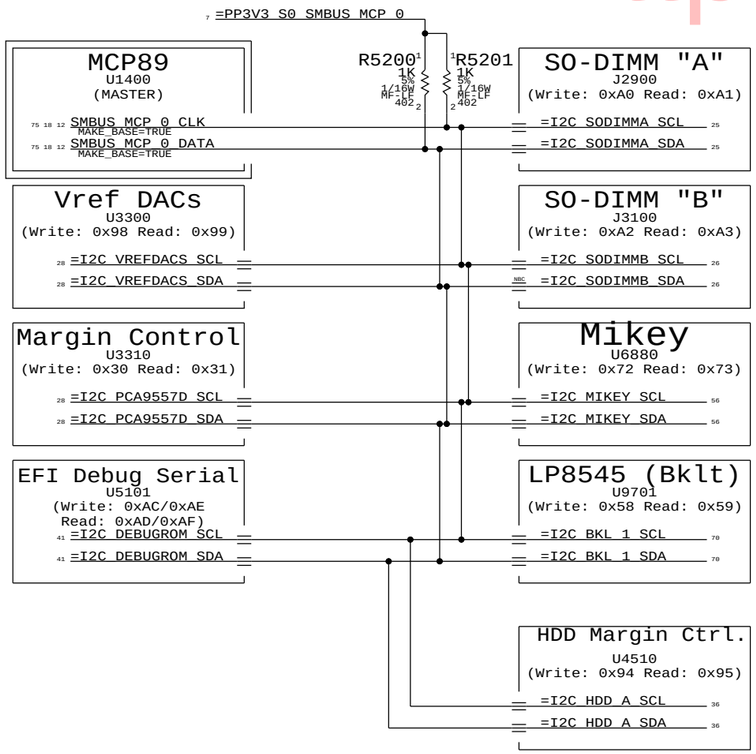

SMC "0" SMBus Connections

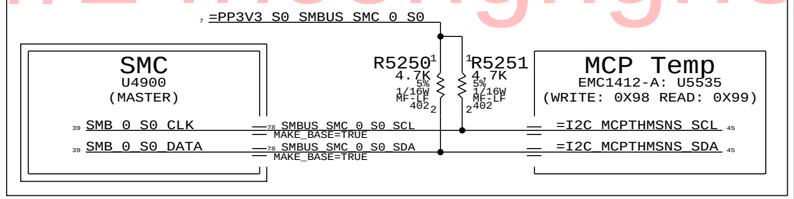

SMC "A" SMBus Connections

NOTE: SMC RMT bus remains powered and may be active in S3 state

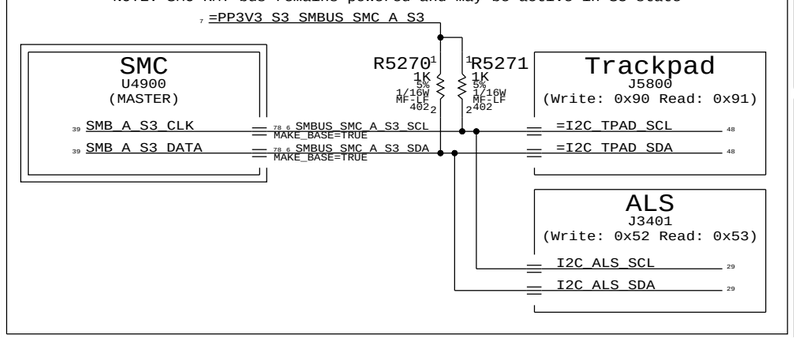

SMC "Battery A" SMBus Connections

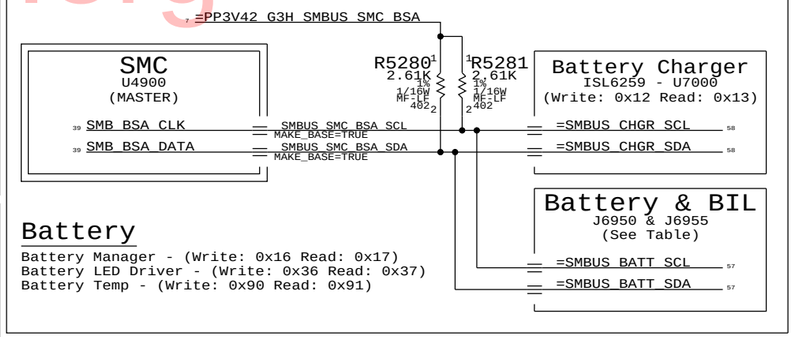

Battery

Battery Manager - (Write: 0x16 Read: 0x17)
Battery LED Driver - (Write: 0x36 Read: 0x37)
Battery Temp - (Write: 0x90 Read: 0x91)

SMC "Management" SMBus Connections

The bus formerly known as "Battery B"

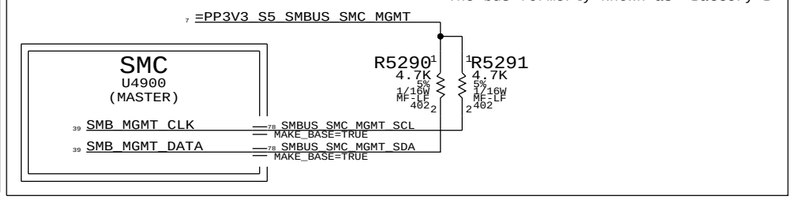

MCP89 SMBus "1" Connections

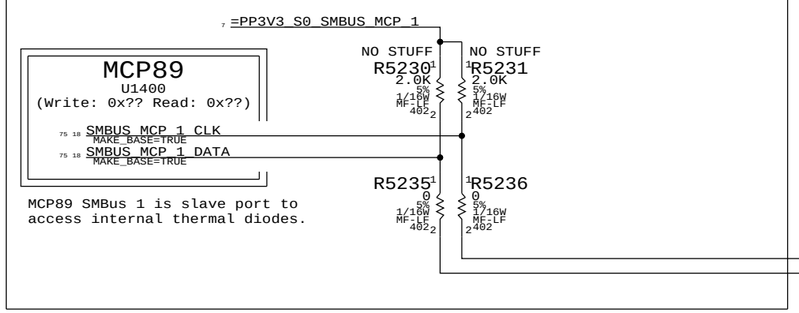

MCP89 SMBus 1 is slave port to access internal thermal diodes.

SMC "B" SMBus Connections

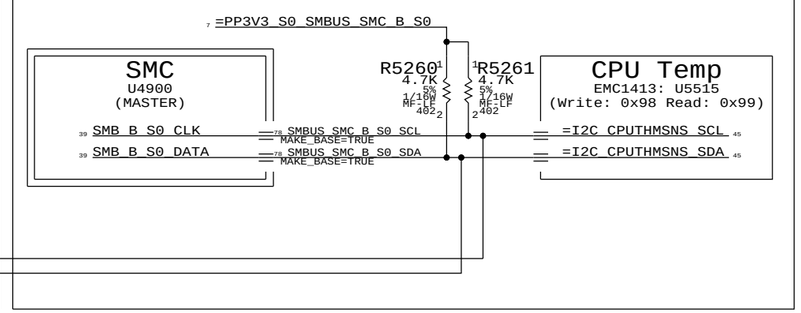

NOTE:

R5280/81 WAS 2K ON K24, VALUE NEEDS TO BE CHECKED
R5290/91 (VREF DAC, MARGIN CONTROL)WAS 4.7K ON K24, VALUE NEEDS TO BE CHECKED

SYNC_MASTER=T27_MLB SYNC_DATE=08/21/2009

PAGE TITLE
K6 SMBUS CONNECTIONS

Apple Inc.

DRAWING NUMBER 051-8563 SIZE D
REVISION A.13.0
BRANCH
PAGE 52 OF 109
SHEET 42 OF 80

NOTICE OF PROPRIETARY PROPERTY:
THE INFORMATION CONTAINED HEREIN IS THE PROPRIETARY PROPERTY OF APPLE COMPUTER, INC.
THE POSESSOR AGREES TO THE FOLLOWING:
I TO MAINTAIN THIS DOCUMENT IN CONFIDENCE
II NOT TO REPRODUCE OR COPY IT
III NOT TO REVEAL OR PUBLISH IT IN WHOLE OR PART
IV ALL RIGHTS RESERVED

www.vinafix.vn

http://24hcongnghe.org

CPU Voltage Sense / Filter

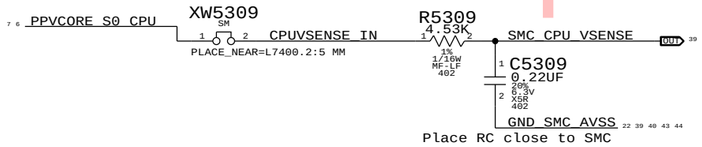

MCP Voltage Sense / Filter

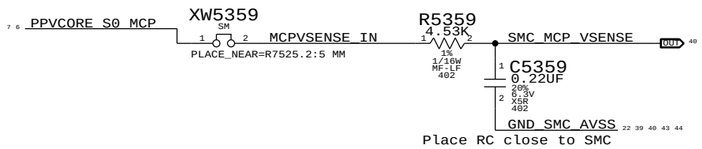

PBUS Voltage Sense Enable & Filter

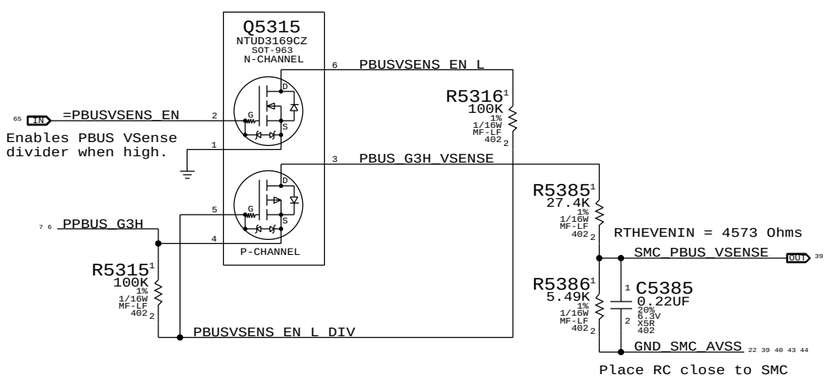

SYNC_MASTER=T27_MLB	SYNC_DATE=08/27/2009
PAGE TITLE: Voltage Sensing	
Apple Inc.	DRAWING NUMBER: 051-8563 SIZE: D
	REVISION: A.13.0
NOTICE OF PROPRIETARY PROPERTY: THE INFORMATION CONTAINED HEREIN IS THE PROPRIETARY PROPERTY OF APPLE COMPUTER, INC. THE POSESSOR AGREES TO THE FOLLOWING: I TO MAINTAIN THIS DOCUMENT IN CONFIDENCE II NOT TO REPRODUCE OR COPY IT III NOT TO REVEAL OR PUBLISH IT IN WHOLE OR PART IV ALL RIGHTS RESERVED	BRANCH
	PAGE: 53 OF 109
	SHEET: 43 OF 80

www.vinafix.vn

http://24hcongnghe.org

MCP MEM VDD Current Sense / Filter

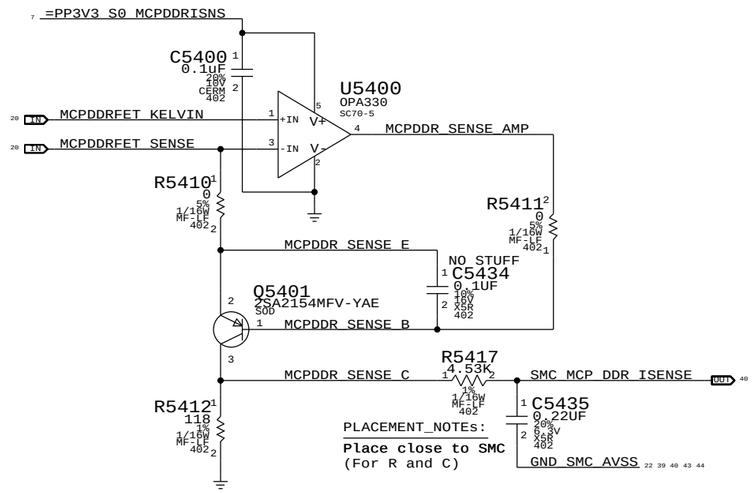

MCP VCore Current Sense Filter

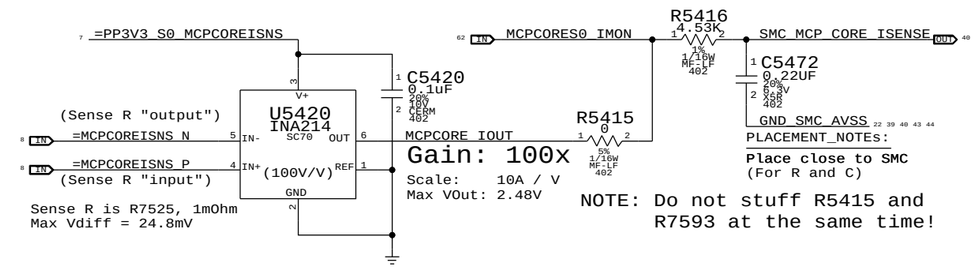

MCP/CPU 1.05V AND CPU VCore High-Side Current Sense / Filter

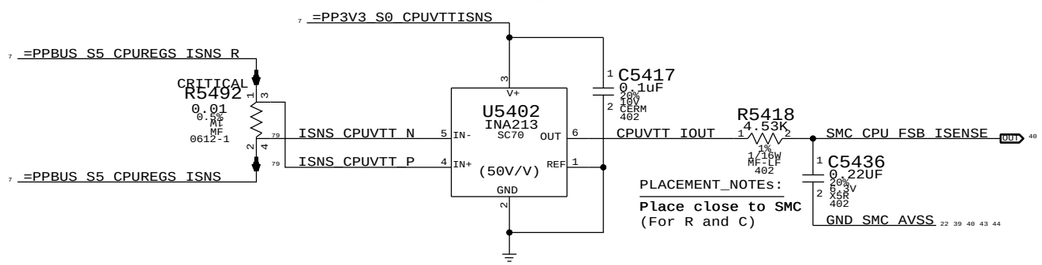

CPU VCore Load Side Current Sense / Filter

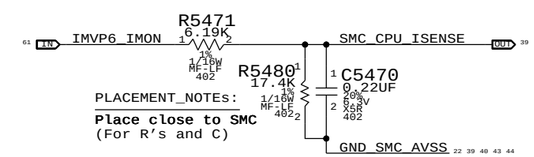

Battery (BMON) Current Sense, MUX & Filter

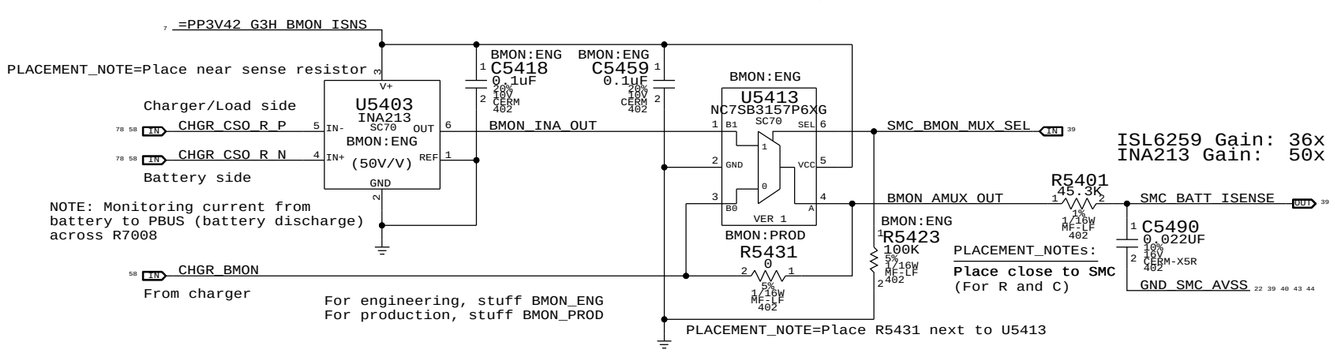

DC-IN (AMON) Current Sense Filter

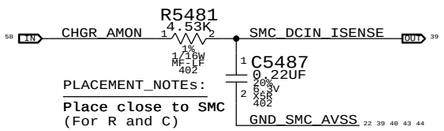

SYNC_MASTER=T27_MLB SYNC_DATE=09/30/2009

PAGE TITLE
Current Sensing

Apple Inc.

DRAWING NUMBER 051-8563 SIZE D

REVISION A.13.0

BRANCH

PAGE 54 OF 109

SHEET 44 OF 80

NOTICE OF PROPRIETARY PROPERTY:
THE INFORMATION CONTAINED HEREIN IS THE PROPRIETARY PROPERTY OF APPLE COMPUTER, INC.
THE POSESSOR AGREES TO THE FOLLOWING:
I TO MAINTAIN THIS DOCUMENT IN CONFIDENCE
II NOT TO REPRODUCE OR COPY IT
III NOT TO REVEAL OR PUBLISH IT IN WHOLE OR PART
IV ALL RIGHTS RESERVED

www.vinafix.vn

http://24hcongnghe.org

CPU T-Diode Thermal Sensor

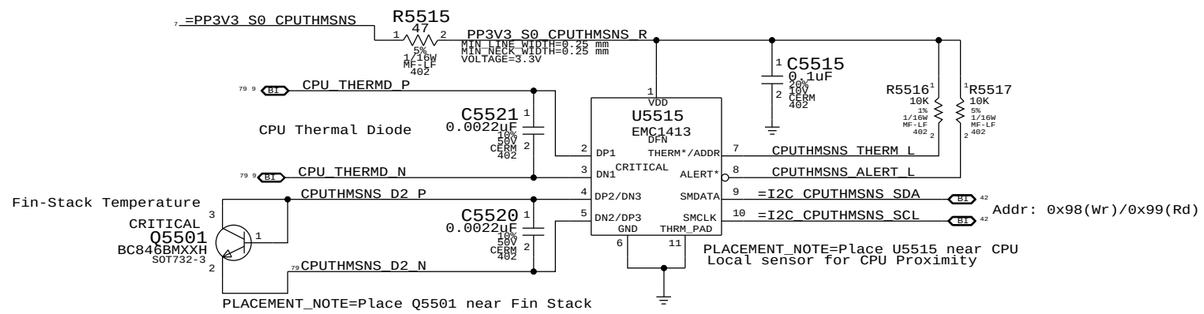

MCP T-Diode Thermal Sensor

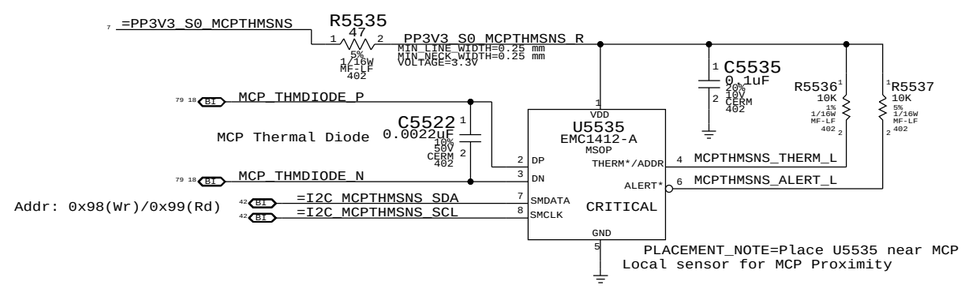

SYNC_MASTER=T27_MLB SYNC_DATE=08/27/2009

PAGE TITLE
Thermal Sensors

Apple Inc.

DRAWING NUMBER 051-8563 SIZE D

REVISION A.13.0

BRANCH

PAGE 55 OF 109

SHEET 45 OF 80

NOTICE OF PROPRIETARY PROPERTY:
THE INFORMATION CONTAINED HEREIN IS THE PROPRIETARY PROPERTY OF APPLE COMPUTER, INC.
THE POSESSOR AGREES TO THE FOLLOWING:
I TO MAINTAIN THIS DOCUMENT IN CONFIDENCE
II NOT TO REPRODUCE OR COPY IT
III NOT TO REVEAL OR PUBLISH IT IN WHOLE OR PART
IV ALL RIGHTS RESERVED

www.vinafix.vn

http://24hcongnghe.org

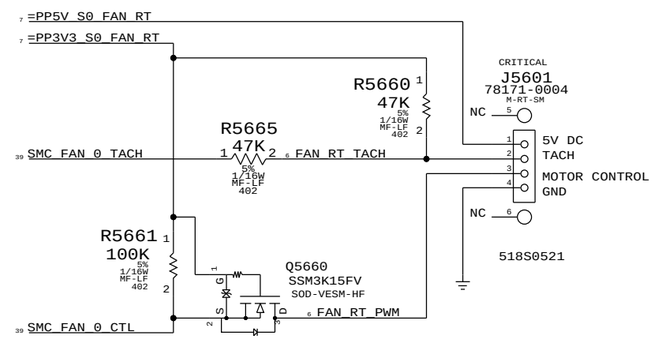

SYNC_MASTER=K24_MLB SYNC_DATE=07/20/2009

PAGE TITLE

Fan

Apple Inc.

DRAWING NUMBER 051-8563 SIZE D

REVISION A.13.0

BRANCH

PAGE 56 OF 109

SHEET 46 OF 80

NOTICE OF PROPRIETARY PROPERTY:

THE INFORMATION CONTAINED HEREIN IS THE PROPRIETARY PROPERTY OF APPLE COMPUTER, INC.
THE POSESSOR AGREES TO THE FOLLOWING:
I TO MAINTAIN THIS DOCUMENT IN CONFIDENCE
II NOT TO REPRODUCE OR COPY IT
III NOT TO REVEAL OR PUBLISH IT IN WHOLE OR PART
IV ALL RIGHTS RESERVED

www.vinafix.vn

http://24hcongnghe.org

PSOC USB CONTROLLER

- USB INTERFACES TO MLB
- SPI HOST TO Z2
- TRACKPAD PICK BUTTONS
- KEYBOARD SCANNER

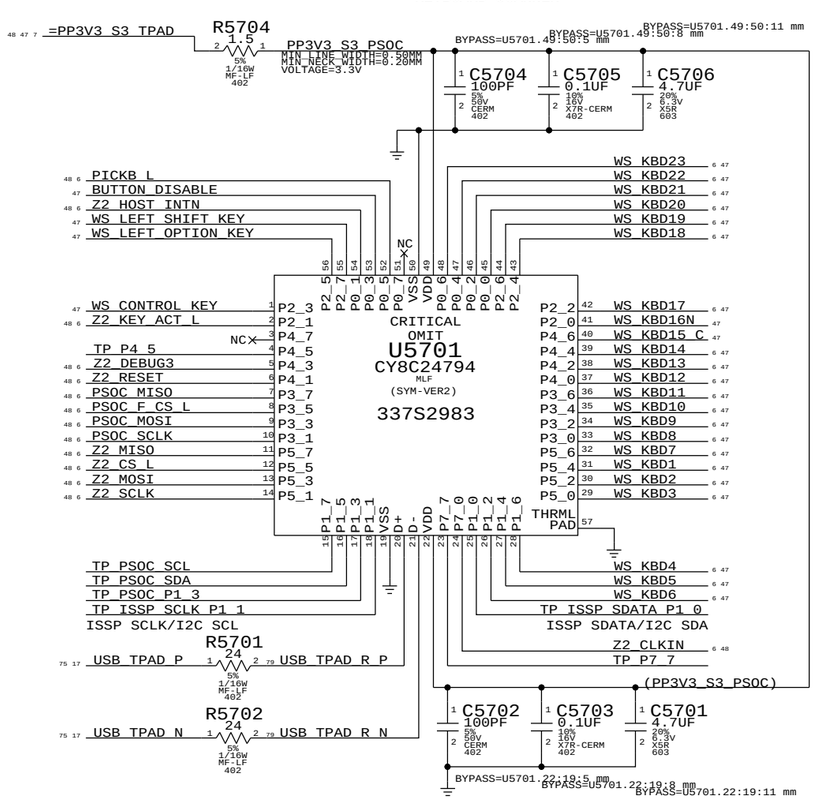

IC	PIN NAME	CURRENT	R_SNS	V_SNS	POWER
TMP102	V+	10UA 80UA	2.55 KOHM	0.0255 V 0.204 V	0.255E-6 W 16.32E-6 W
3V3 LDO	VDD VOUT	60MA (MAX) 60MA (MAX)	10 OHM 0.2 OHM	0.6 V 0.012 V	36E-3 W 0.72E-3 W
PSOC	VDD	8MA (TYP) 14MA (MAX)	1.5 OHM	0.012 V 0.021 V	96E-6 W 294E-6 W
18V BOOSTER	VIN	4MA (MAX)	4.7 OHM	0.0188 V	75.2E-6 W

Keyboard Connector

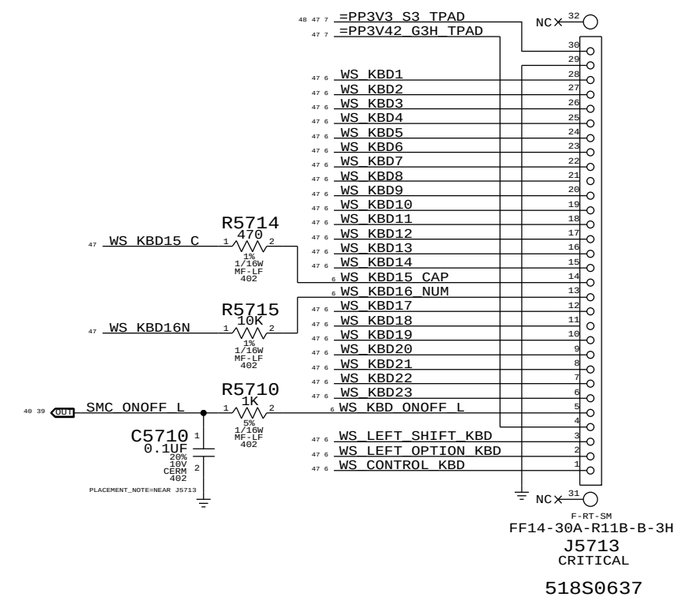

SMC Manual Reset & Isolation

Left shift, option & control keys combined with power button cause SMC RESET# assertion.
Keys ANDed with PSOC power to isolate when PSOC is not powered.

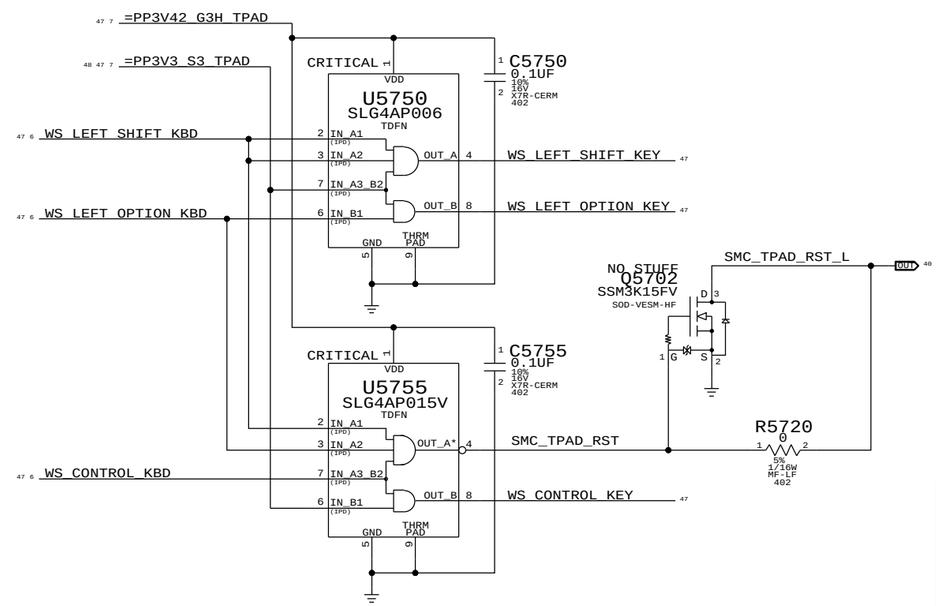

TPAD Buttons Disable

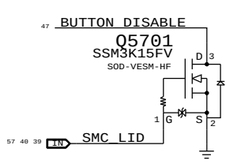

PLACE THESE COMPONENTS CLOSE TO J5800
THIS ASSUMES THERE'S A PP3V42_G3H PULL UP ON MLB

THE TPAD BUTTONS WILL BE DISABLE
WHEN THE LID IS CLOSED
LID OPEN => SMC_LID_LC ~ 3.42V
LID CLOSE => SMC_LID_LC < 0.50V

SYNC MASTER=T27 MLB — SYNC DATE=08/15/2009

PAGE TITLE: WELLSPRING 1

Apple Inc.

DRAWING NUMBER: 051-8563 — SIZE: D

REVISION: A.13.0

BRANCH:

PAGE: 57 OF 109

SHEET: 47 OF 80

NOTICE OF PROPRIETARY PROPERTY:
THE INFORMATION CONTAINED HEREIN IS THE PROPRIETARY PROPERTY OF APPLE COMPUTER, INC.
THE POSESSOR AGREES TO THE FOLLOWING:
I TO MAINTAIN THIS DOCUMENT IN CONFIDENCE
II NOT TO REPRODUCE OR COPY IT
III NOT TO REVEAL OR PUBLISH IT IN WHOLE OR PART
IV ALL RIGHTS RESERVED

www.vinafix.vn

http://24hcongnghe.org

BOOSTER +18.5VDC FOR SENSORS

BOOSTER DESIGN CONSIDERATION:
- POWER CONSUMPTION
- DROOP LINE REGULATION
- RIPPLE TO MEET ERS
- 100-300 KHZ CLEAN SPECTRUM
- STARTUP TIME LESS THAN 2MS
- R5812,R5813,C5818 MODIFIED

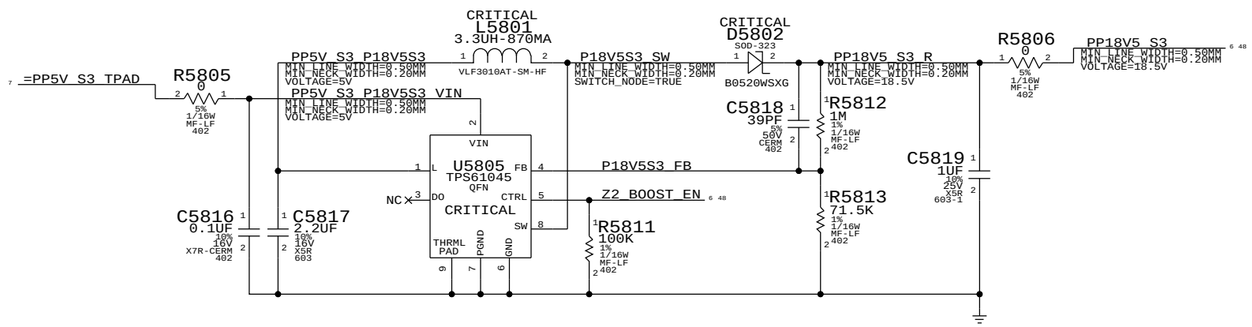

IPD Flex Connector

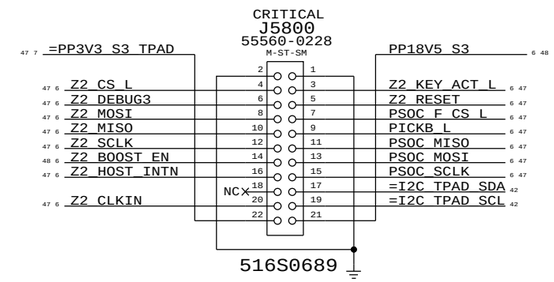

Keyboard Backlight Driver & Detection

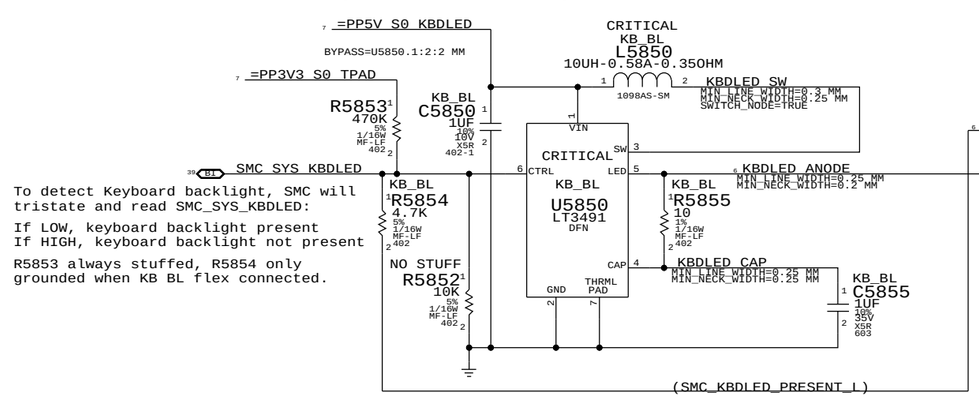

Keyboard Backlight Connector

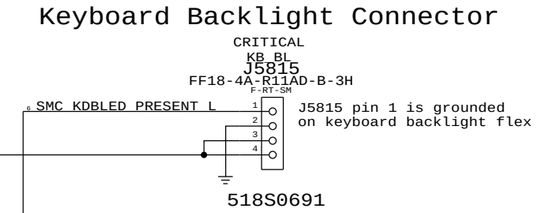

K6 NOTES : C5850 HAS BYPASS PROPERTY, SHOULD BE ADDED INCASE THIS PAGE IS SYNC'ED FROM T27

SYNC_MASTER=T27_MLB SYNC_DATE=08/03/2009

PAGE TITLE: WELLSPRING 2

Apple Inc.

DRAWING NUMBER: 051-8563 SIZE: D

REVISION: A.13.0

BRANCH:

PAGE: 58 OF 109

SHEET: 48 OF 80

NOTICE OF PROPRIETARY PROPERTY:
THE INFORMATION CONTAINED HEREIN IS THE PROPRIETARY PROPERTY OF APPLE COMPUTER, INC.
THE POSESSOR AGREES TO THE FOLLOWING:
I TO MAINTAIN THIS DOCUMENT IN CONFIDENCE
II NOT TO REPRODUCE OR COPY IT
III NOT TO REVEAL OR PUBLISH IT IN WHOLE OR PART
IV ALL RIGHTS RESERVED

www.vinafix.vn

http://24hcongnghe.org

Analog SMS

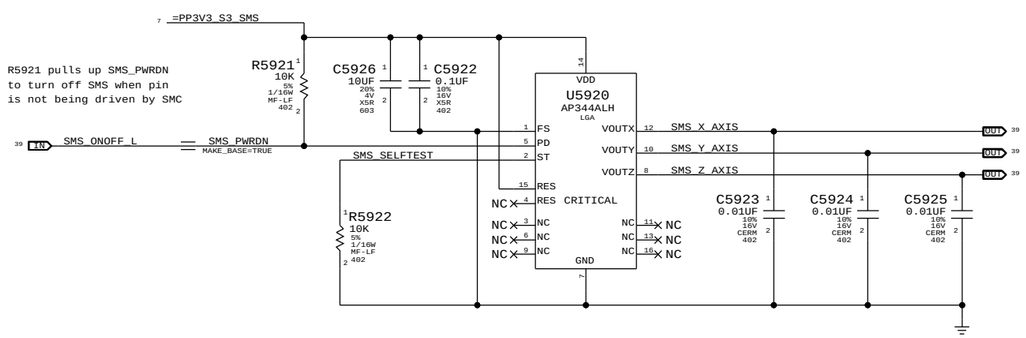

Desired orientation when
placed on board top-side:

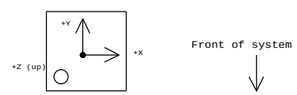

Circle indicates pin 1 location when placed
in correct orientation

SYNC_MASTER=T27_MLB SYNC_DATE=07/20/2009

PAGE TITLE
Sudden Motion Sensor (SMS)

Apple Inc.

DRAWING NUMBER 051-8563 SIZE D

REVISION A.13.0

BRANCH

PAGE 59 OF 109

SHEET 49 OF 80

NOTICE OF PROPRIETARY PROPERTY:
THE INFORMATION CONTAINED HEREIN IS THE PROPRIETARY PROPERTY OF APPLE COMPUTER, INC.
THE POSESSOR AGREES TO THE FOLLOWING:
I TO MAINTAIN THIS DOCUMENT IN CONFIDENCE
II NOT TO REPRODUCE OR COPY IT
III NOT TO REVEAL OR PUBLISH IT IN WHOLE OR PART
IV ALL RIGHTS RESERVED

www.vinafix.vn

http://24hcongnghe.org

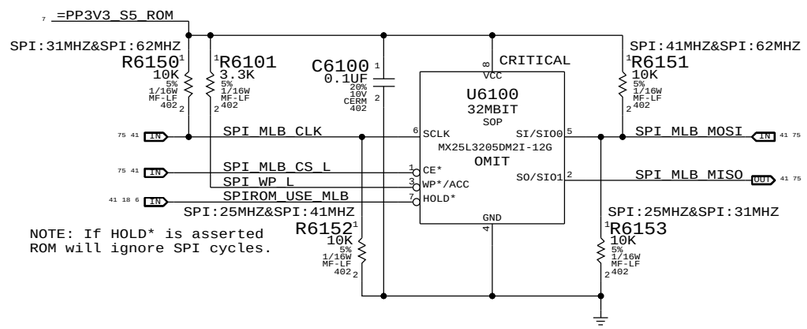

MCP89 SPI Frequency Select

Frequency	SPI_MOSI	SPI_CLK
25.0 MHz	0	0
31.2 MHz	0	1
41.7 MHz	1	0
62.5 MHz	1	1

NOTE: 42 & 62 MHz use FAST_READ command.

SYNC_MASTER=T27_MLB SYNC_DATE=10/21/2009

PAGE TITLE
SPI ROM

Apple Inc.

DRAWING NUMBER 051-8563 SIZE D

REVISION A.13.0

BRANCH

PAGE 61 OF 109

SHEET 50 OF 80

NOTICE OF PROPRIETARY PROPERTY:
THE INFORMATION CONTAINED HEREIN IS THE PROPRIETARY PROPERTY OF APPLE COMPUTER, INC.
THE POSESSOR AGREES TO THE FOLLOWING:
I TO MAINTAIN THIS DOCUMENT IN CONFIDENCE
II NOT TO REPRODUCE OR COPY IT
III NOT TO REVEAL OR PUBLISH IT IN WHOLE OR PART
IV ALL RIGHTS RESERVED

www.vinafix.vn

http://24hcongnghe.org

AUDIO CODEC

APPLE P/N 353S2355

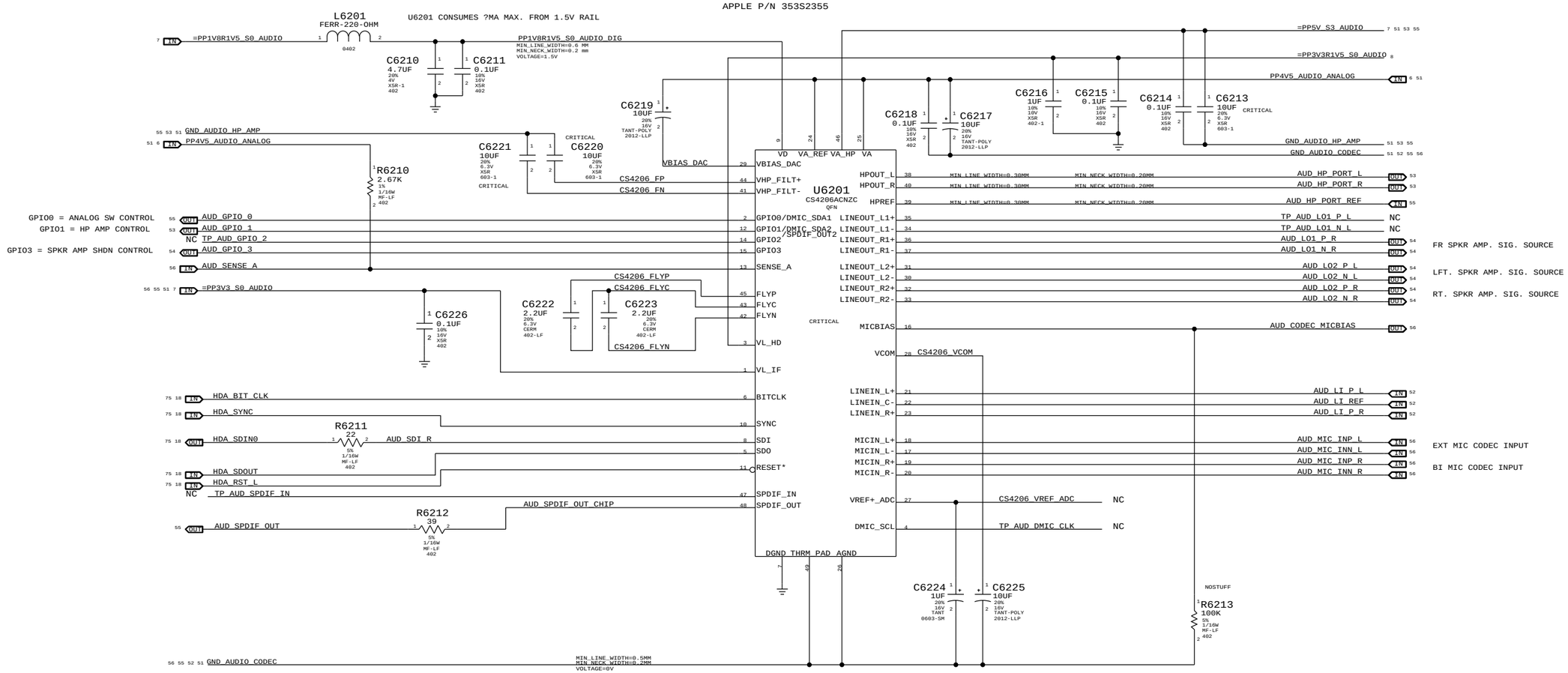

4.5V POWER SUPPLY FOR CODEC

APPLE P/N 353S2456

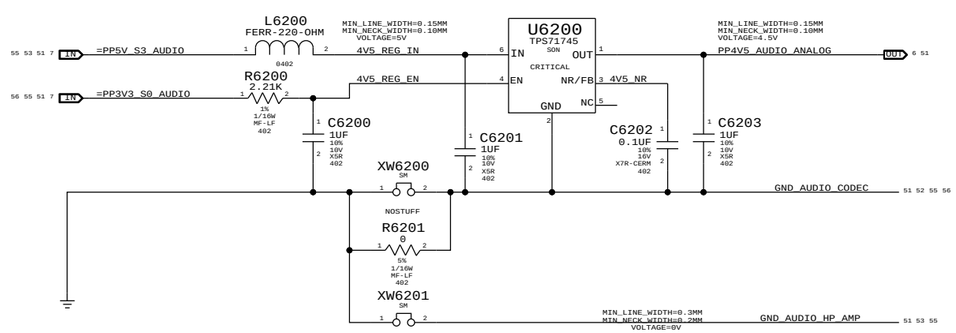

NOTES ON CODEC I/O

DIFF FSINPUT= 2.45VRMS
SE FSINPUT= 1.22VRMS
DAC1 FSOUTPUT= 1.34VRMS
DAC2/3 FSOUTPUTDIFF= 2.67VRMS
DAC2/3 FSOUTPUTSE= 1.34VRMS

SYNC_MASTER=AUDIO SYNC_DATE=08/31/2009

PAGE TITLE
AUDIO: CODEC/REGULATOR

Apple Inc.

DRAWING NUMBER 051-8563 SIZE D
REVISION A.13.0
BRANCH
PAGE 62 OF 109
SHEET 51 OF 80

NOTICE OF PROPRIETARY PROPERTY:
THE INFORMATION CONTAINED HEREIN IS THE PROPRIETARY PROPERTY OF APPLE COMPUTER, INC.
THE POSESSOR AGREES TO THE FOLLOWING:
I TO MAINTAIN THIS DOCUMENT IN CONFIDENCE
II NOT TO REPRODUCE OR COPY IT
III NOT TO REVEAL OR PUBLISH IT IN WHOLE OR PART
IV ALL RIGHTS RESERVED

www.vinafix.vn

http://24hcongnghe.org

LINE INPUT VOLTAGE DIVIDER

CODEC RIN = 20K OHMS
NET RIN = 10.36K OHMS (INCLUDING PULL-DOWNS AT ANALOG SWITCH COM PINS)
FC_HP = 3.6 HZ
FC_LP = 43KHZ
VIN = 2VRMS, CODEC VIN = 1.14 VRMS

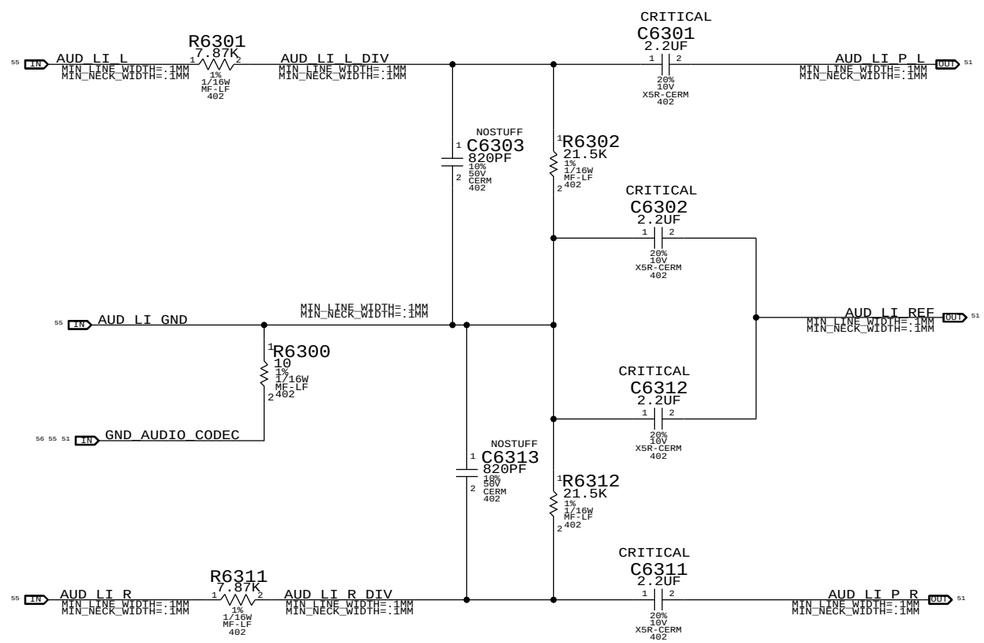

PAGE TITLE	AUDIO: LINE INPUT FILTER
Apple Inc.	DRAWING NUMBER 051-8563 SIZE D
	REVISION A.13.0
	BRANCH
	PAGE 63 OF 109
	SHEET 52 OF 80

NOTICE OF PROPRIETARY PROPERTY:
THE INFORMATION CONTAINED HEREIN IS THE PROPRIETARY PROPERTY OF APPLE COMPUTER, INC.
THE POSESSOR AGREES TO THE FOLLOWING:
I TO MAINTAIN THIS DOCUMENT IN CONFIDENCE
II NOT TO REPRODUCE OR COPY IT
III NOT TO REVEAL OR PUBLISH IT IN WHOLE OR PART
IV ALL RIGHTS RESERVED

www.vinafix.vn

http://24hcongnghe.org

FOR PROTO2, STUFF R6521 AND NO STUFF R6520 AND R6522 UNTIL
RE-TASKABLE IO SW SUPPORT AVAILABLE (FORCES IO INTO OUTPUT MODE).

ZOBEL NETWORK & 1ST ORDER DAC FILTER PLACEHOLDER

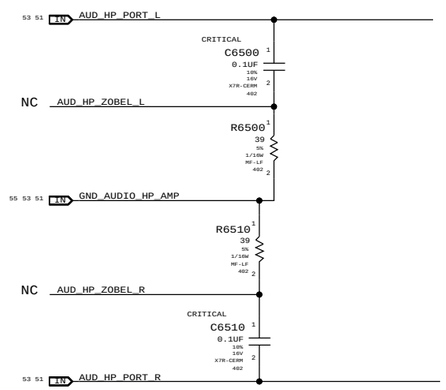

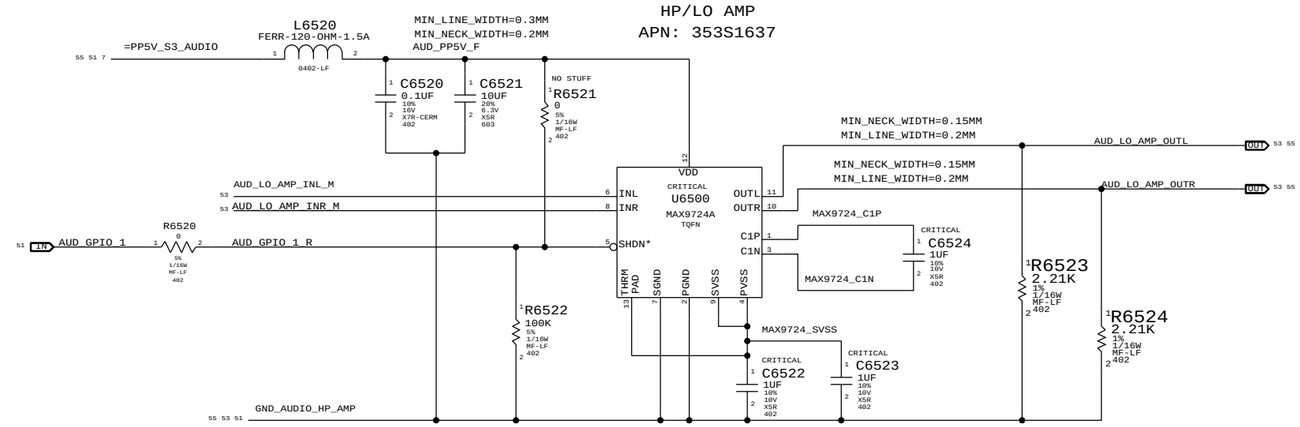

MAX9724 GAIN/FILTER COMPONENTS

AV_PB = -1V/V, FC_LPF = 35.2KHZ

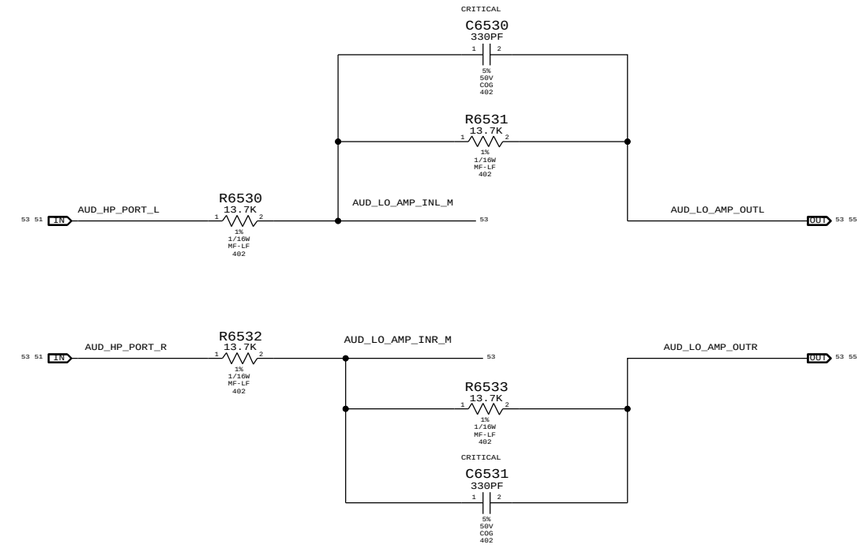

SYNC_MASTER=AUDIO SYNC_DATE=07/17/2009

PAGE TITLE
AUDIO: HEADPHONE FILTER

Apple Inc.

DRAWING NUMBER 051-8563 SIZE D

REVISION A.13.0

BRANCH

PAGE 65 OF 109

SHEET 53 OF 80

NOTICE OF PROPRIETARY PROPERTY:
THE INFORMATION CONTAINED HEREIN IS THE PROPRIETARY PROPERTY OF APPLE COMPUTER, INC.
THE POSESSOR AGREES TO THE FOLLOWING:
I TO MAINTAIN THIS DOCUMENT IN CONFIDENCE
II NOT TO REPRODUCE OR COPY IT
III NOT TO REVEAL OR PUBLISH IT IN WHOLE OR PART
IV ALL RIGHTS RESERVED

www.vinafix.vn

http://24hcongnghe.org

SATELLITE & SUB TWEETER AMPLIFIER

APN:353S2524

SATELLITE	169 HZ < FC < 282 HZ
SUB	80 HZ < FC < 132 HZ
GAIN	6DB

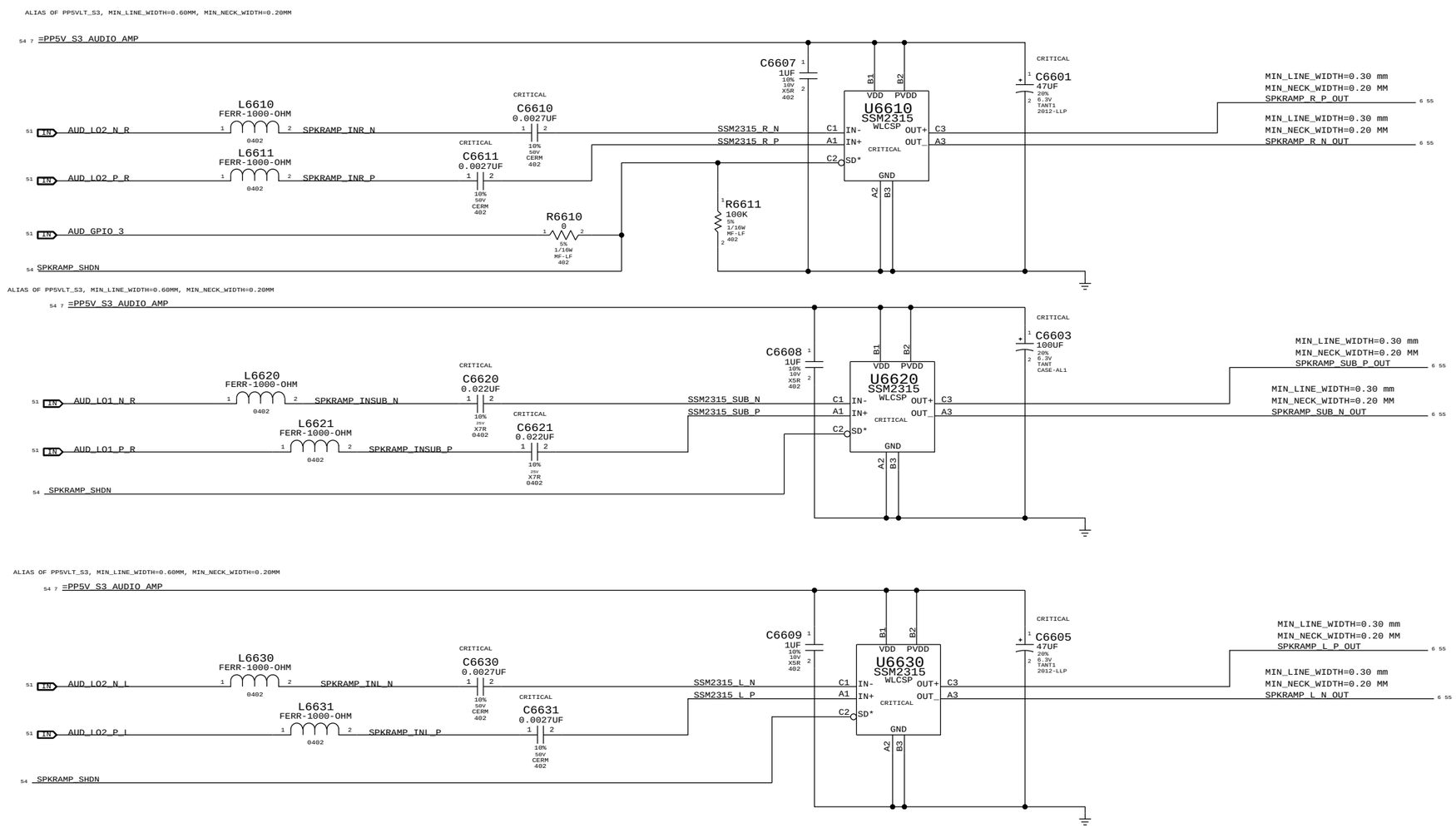

SYNC MASTER=AUDIO	SYNC DATE=07/17/2008
PAGE TITLE	AUDIO: SPEAKER AMP
Apple Inc.	DRAWING NUMBER 051-8563 SIZE D
	REVISION A.13.0
	BRANCH
	PAGE 66 OF 109
	SHEET 54 OF 80

NOTICE OF PROPRIETARY PROPERTY:
THE INFORMATION CONTAINED HEREIN IS THE PROPRIETARY PROPERTY OF APPLE COMPUTER, INC.
THE POSESSOR AGREES TO THE FOLLOWING:
I TO MAINTAIN THIS DOCUMENT IN CONFIDENCE
II NOT TO REPRODUCE OR COPY IT
III NOT TO REVEAL OR PUBLISH IT IN WHOLE OR PART
IV ALL RIGHTS RESERVED

www.vinafix.vn

http://24hcongnghe.org

AUDIO JACK: LI/LO/HP CONNECTOR, SPDIF TX

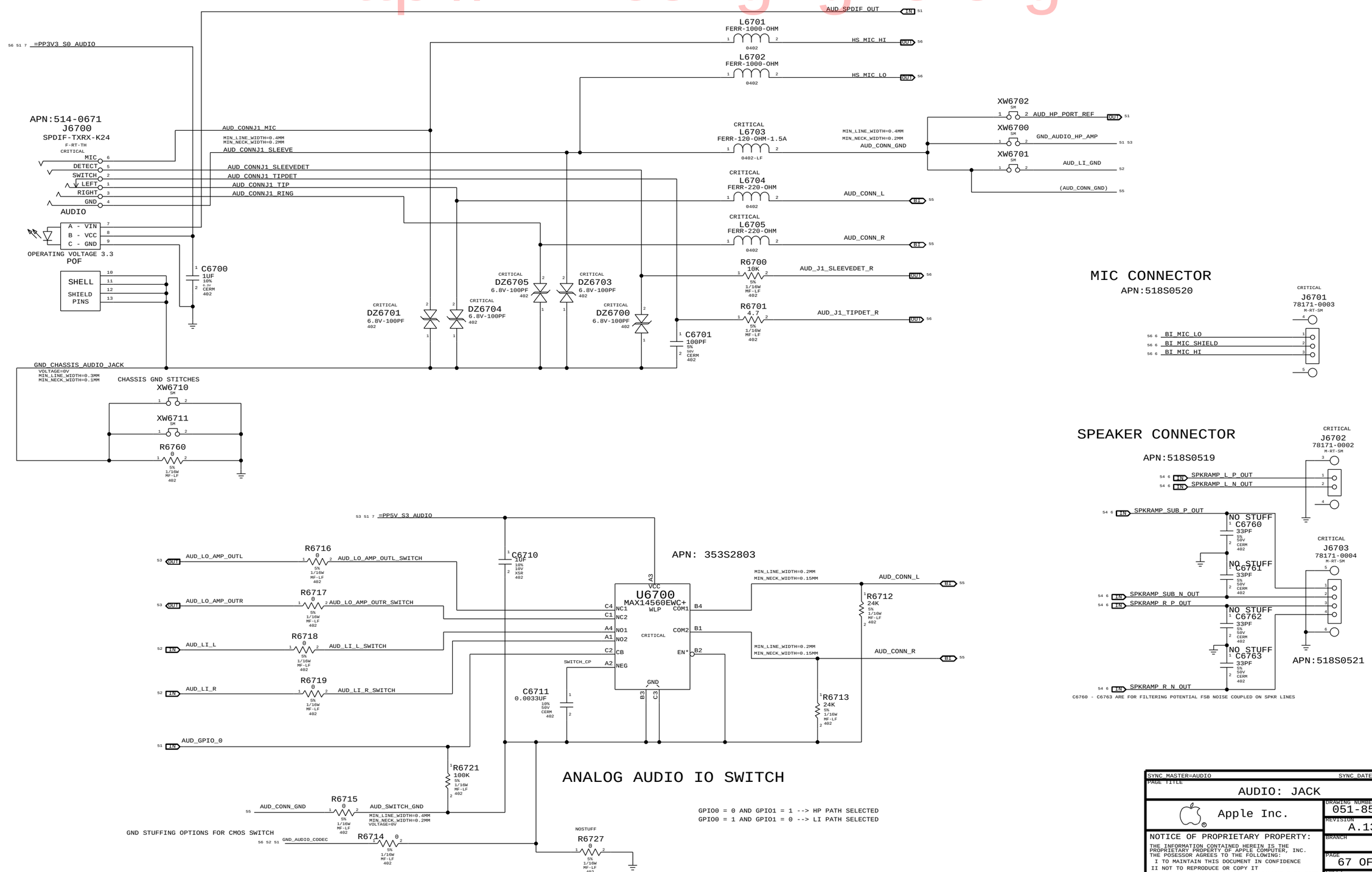

SYNC_MASTER=AUDIO SYNC_DATE=08/25/2009

PAGE TITLE: AUDIO: JACK

Apple Inc.

DRAWING NUMBER: 051-8563 SIZE: D

REVISION: A.13.0

BRANCH

PAGE: 67 OF 109

SHEET: 55 OF 80

NOTICE OF PROPRIETARY PROPERTY:
THE INFORMATION CONTAINED HEREIN IS THE PROPRIETARY PROPERTY OF APPLE COMPUTER, INC.
THE POSESSOR AGREES TO THE FOLLOWING:
I TO MAINTAIN THIS DOCUMENT IN CONFIDENCE
II NOT TO REPRODUCE OR COPY IT
III NOT TO REVEAL OR PUBLISH IT IN WHOLE OR PART
IV ALL RIGHTS RESERVED

www.vinafix.vn

http://24hcongnghe.org

CODEC OUTPUT SIGNAL PATHS

FUNCTION	VOLUME	CONVERTER	PIN COMPLEX	MUTE CONTROL	DET ASSIGNMENT
HP/LINE OUT	0X02 (2)	0X02 (2)	0X09 (9,A)	GPIO_0 AND GPIO_1	0X09 (A)
LINE IN	0X05 (5)	0X05 (5)	0X0C (12)	GPIO_0 AND GPIO_1	0X09 (A)AND UI ELEMENT
SATELLITES	0X04 (4)	0X04 (4)	0X0B (11)	GPIO_3	N/A
SUB	0X03 (3)	0X03 (03)	0X0A (10)	GPIO_3	N/A
SPDIF OUT	N/A	0X08 (8)	0X10 (16)	N/A	0X0D (B)

CODEC INPUT SIGNAL PATHS

FUNCTION	CONVERTER	PIN COMPLEX	VREF	DET ASSIGNMENT
BUILT-IN MIC	0X06 (6)	0X0D (13,B,RIGHT)	MIC_BIAS (80%)	N/A
HEADSET MIC	0X06 (6)	0X0D (13,V22,B,LEFT)	MIKEY	MIKEY

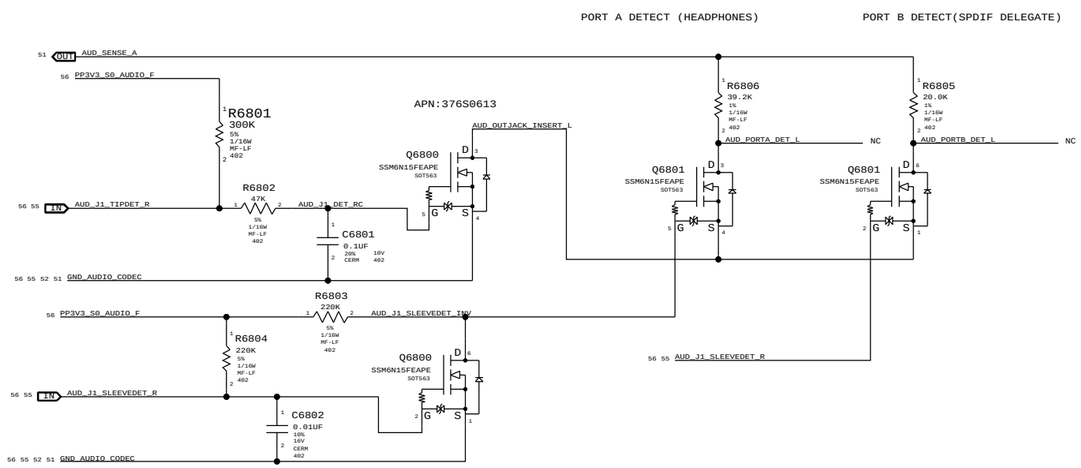

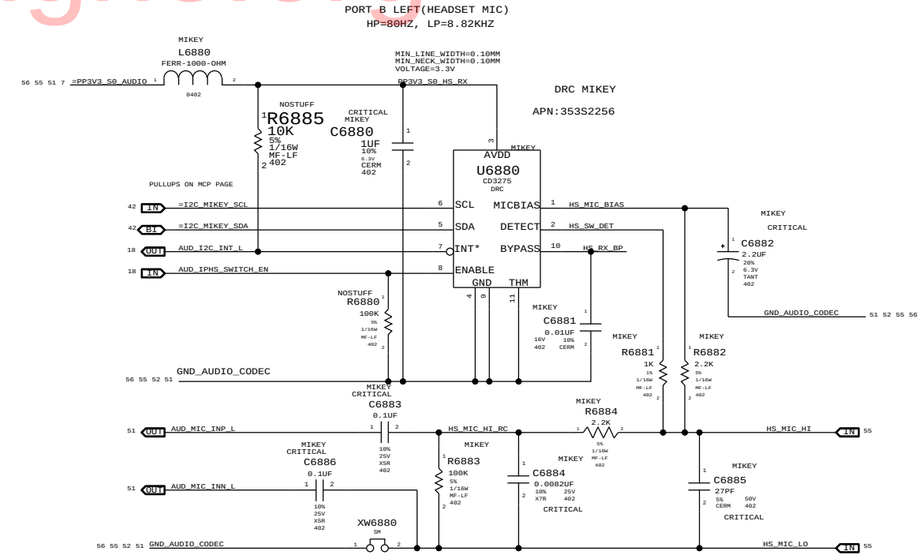

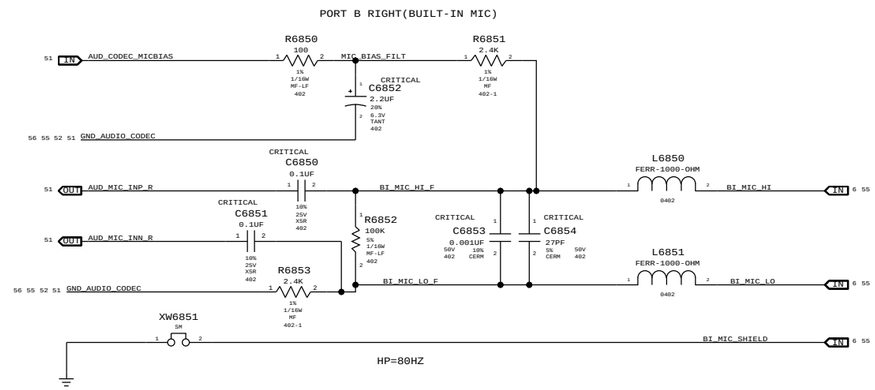

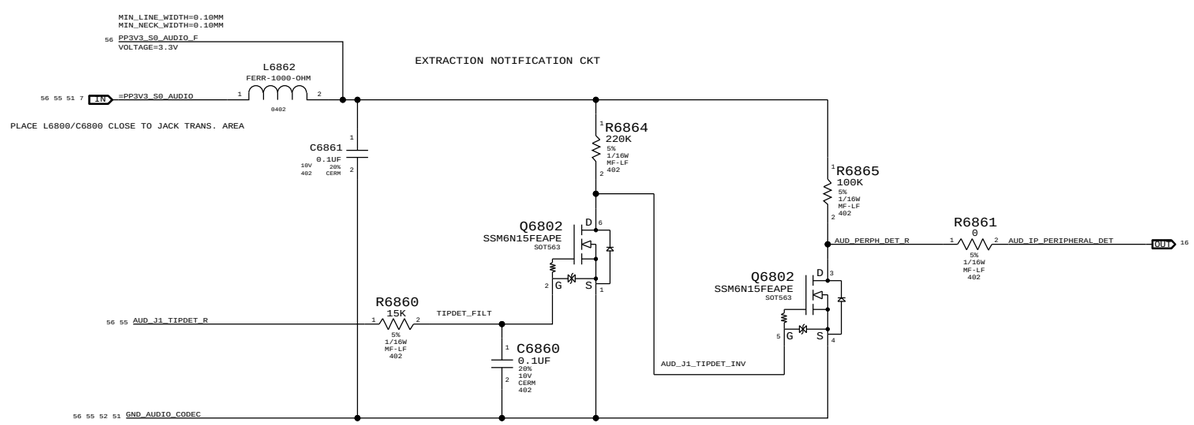

SYNC MASTER=AUDIO SYNC DATE=08/27/2009

PAGE TITLE

AUDIO: JACK TRANSLATORS

Apple Inc.

DRAWING NUMBER 051-8563 SIZE D

REVISION A.13.0

BRANCH

PAGE 68 OF 109

SHEET 56 OF 80

NOTICE OF PROPRIETARY PROPERTY:
THE INFORMATION CONTAINED HEREIN IS THE PROPRIETARY PROPERTY OF APPLE COMPUTER, INC.
THE POSESSOR AGREES TO THE FOLLOWING:
I TO MAINTAIN THIS DOCUMENT IN CONFIDENCE
II NOT TO REPRODUCE OR COPY IT
III NOT TO REVEAL OR PUBLISH IT IN WHOLE OR PART
IV ALL RIGHTS RESERVED

www.vinafix.vn

http://24hcongnghe.org

MagSafe DC Power Jack

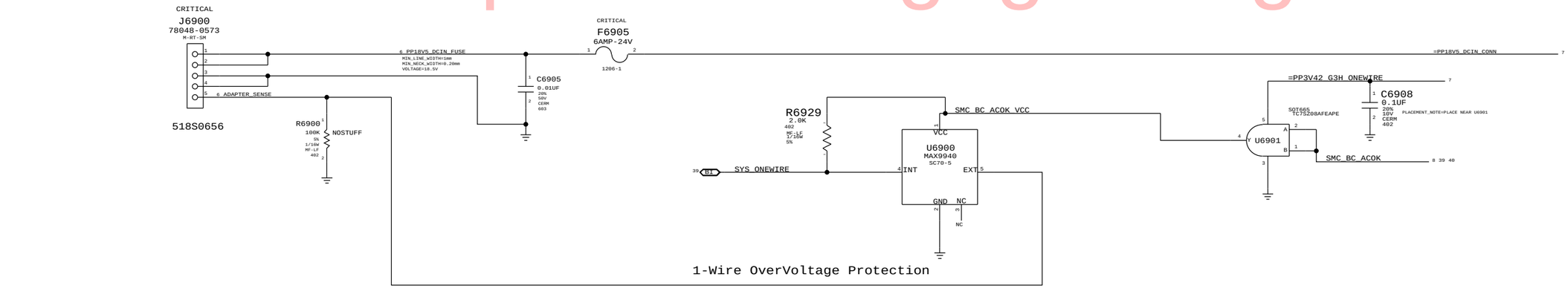

3.425V "G3Hot" Supply

Supply needs to guarantee 3.31V delivered to SMC VRef generator

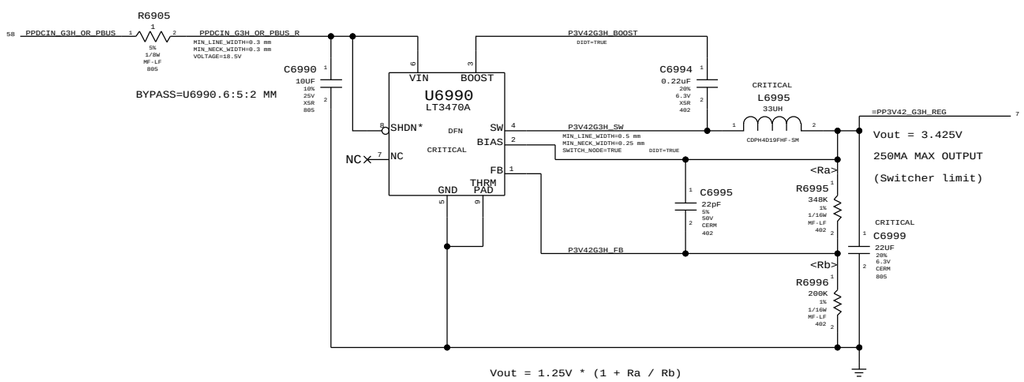

BIL CONNECTOR

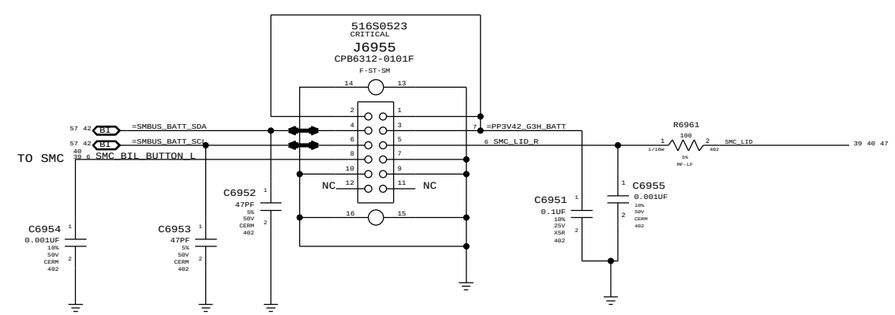

BATTERY CONNECTOR

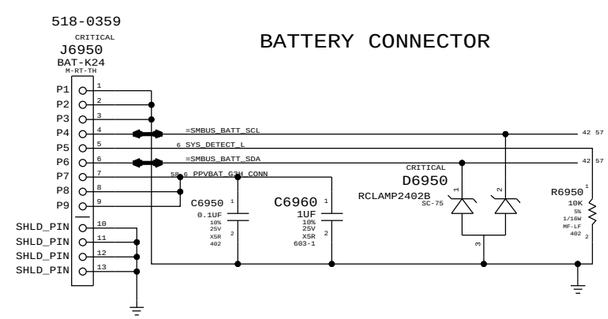

SYNC MASTER=K24_MLB	SYNC DATE=07/20/2009
PAGE TITLE: DC-In & Battery Connectors	
Apple Inc.	DRAWING NUMBER: 051-8563 — SIZE: D
	REVISION: A.13.0
NOTICE OF PROPRIETARY PROPERTY: THE INFORMATION CONTAINED HEREIN IS THE PROPRIETARY PROPERTY OF APPLE COMPUTER, INC. THE POSESSOR AGREES TO THE FOLLOWING: I TO MAINTAIN THIS DOCUMENT IN CONFIDENCE II NOT TO REPRODUCE OR COPY IT III NOT TO REVEAL OR PUBLISH IT IN WHOLE OR PART IV ALL RIGHTS RESERVED	BRANCH
	PAGE: 69 OF 109
	SHEET: 57 OF 80

www.vinafix.vn

http://24hcongnghe.org

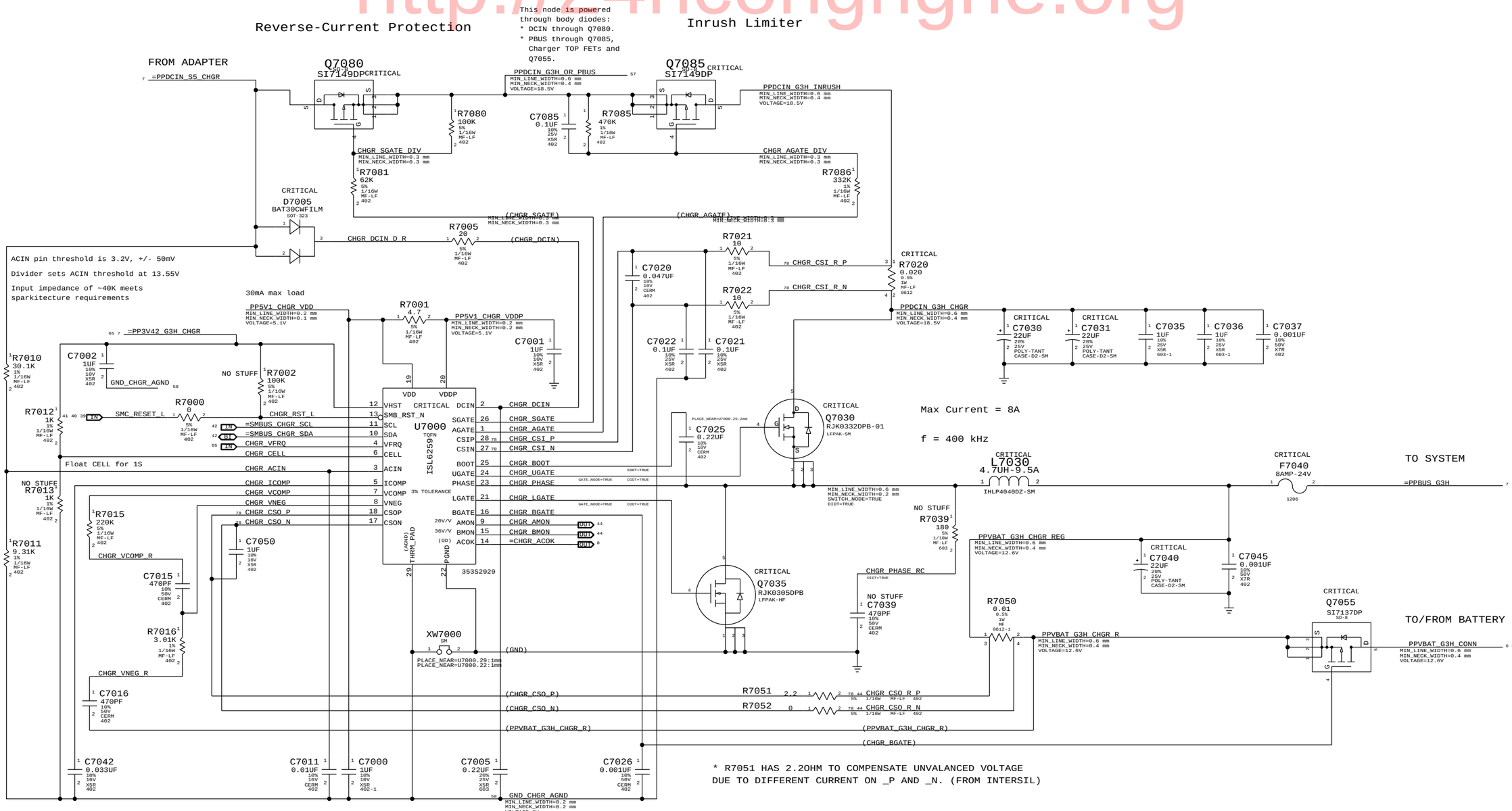

K6 NOTES : L7030 CHANGED BACK TO K24 IND DUE TO LAYOUT

SYNC MASTER=T27 MLB SYNC DATE=07/29/2008

PAGE TITLE
PBus Supply & Battery Charger

Apple Inc.

DRAWING NUMBER 051-8563 SIZE D

REVISION A.13.0

BRANCH

PAGE 70 OF 109

SHEET 58 OF 80

NOTICE OF PROPRIETARY PROPERTY:
THE INFORMATION CONTAINED HEREIN IS THE PROPRIETARY PROPERTY OF APPLE COMPUTER, INC.
THE POSESSOR AGREES TO THE FOLLOWING:
I TO MAINTAIN THIS DOCUMENT IN CONFIDENCE
II NOT TO REPRODUCE OR COPY IT
III NOT TO REVEAL OR PUBLISH IT IN WHOLE OR PART
IV ALL RIGHTS RESERVED

www.vinafix.vn

http://24hcongnghe.org

5V_S3/3.3V_S5 POWER SUPPLY

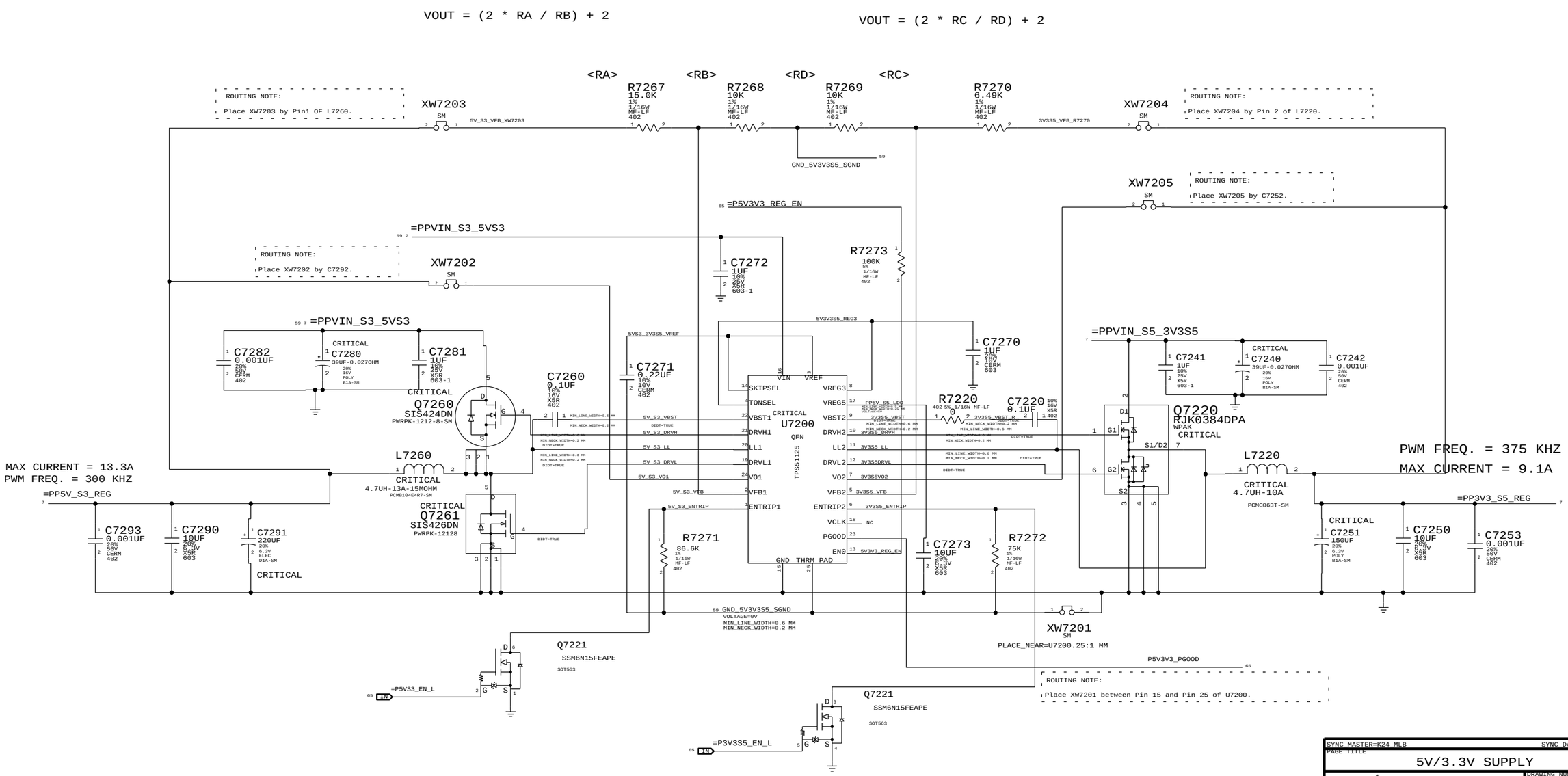

SYNC MASTER=K24_MLB SYNC DATE=07/20/2009

PAGE TITLE: 5V/3.3V SUPPLY

Apple Inc.

DRAWING NUMBER: 051-8563 SIZE: D

REVISION: A.13.0

BRANCH

PAGE: 72 OF 109

SHEET: 59 OF 80

NOTICE OF PROPRIETARY PROPERTY:
THE INFORMATION CONTAINED HEREIN IS THE PROPRIETARY PROPERTY OF APPLE COMPUTER, INC.
THE POSESSOR AGREES TO THE FOLLOWING:
I TO MAINTAIN THIS DOCUMENT IN CONFIDENCE
II NOT TO REPRODUCE OR COPY IT
III NOT TO REVEAL OR PUBLISH IT IN WHOLE OR PART
IV ALL RIGHTS RESERVED

www.vinafix.vn

http://24hcongnghe.org

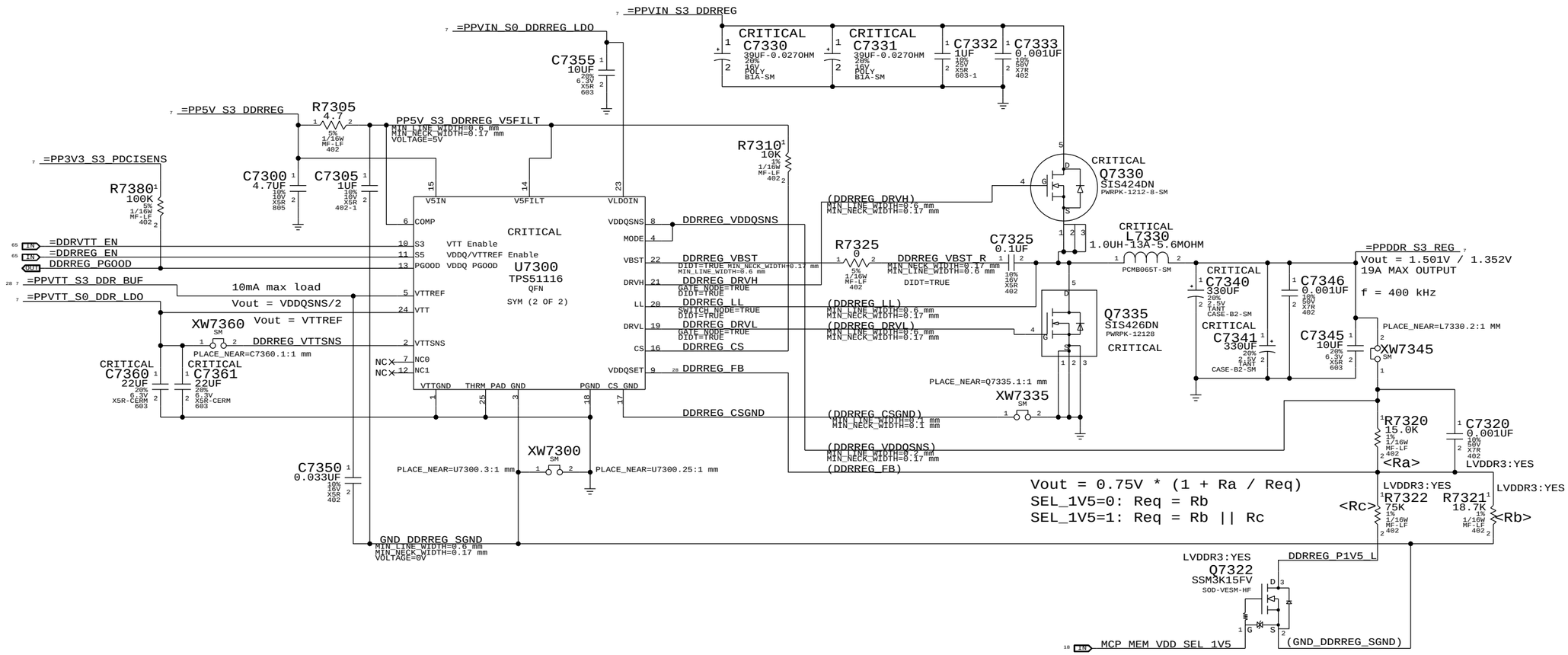

Use LVDDR3 for 1.5V/1.35V support or LVDDR3_NOT for fixed 1.5V operation.

PART NUMBER	QTY	DESCRIPTION	REFERENCE DES	CRITICAL	BOM OPTION
114S0331	1	RES,15K,1%,1/16W,MF-LF,0402	R7321		LVDDR3:NO

NOTE: DONT SYNC THIS PAGE FROM T27. C7330 AND C7331 IS CHANGED TO OSCON CAPS

SYNC MASTER=T27_MLB SYNC DATE=08/06/2009

PAGE TITLE: 1.5V/1.35V LVDDR3 Supply

Apple Inc.

DRAWING NUMBER: 051-8563 SIZE: D

REVISION: A.13.0

BRANCH:

PAGE: 73 OF 109

SHEET: 60 OF 80

NOTICE OF PROPRIETARY PROPERTY:
THE INFORMATION CONTAINED HEREIN IS THE PROPRIETARY PROPERTY OF APPLE COMPUTER, INC.
THE POSESSOR AGREES TO THE FOLLOWING:
I TO MAINTAIN THIS DOCUMENT IN CONFIDENCE
II NOT TO REPRODUCE OR COPY IT
III NOT TO REVEAL OR PUBLISH IT IN WHOLE OR PART
IV ALL RIGHTS RESERVED

www.vinafix.vn

http://24hcongnghe.org

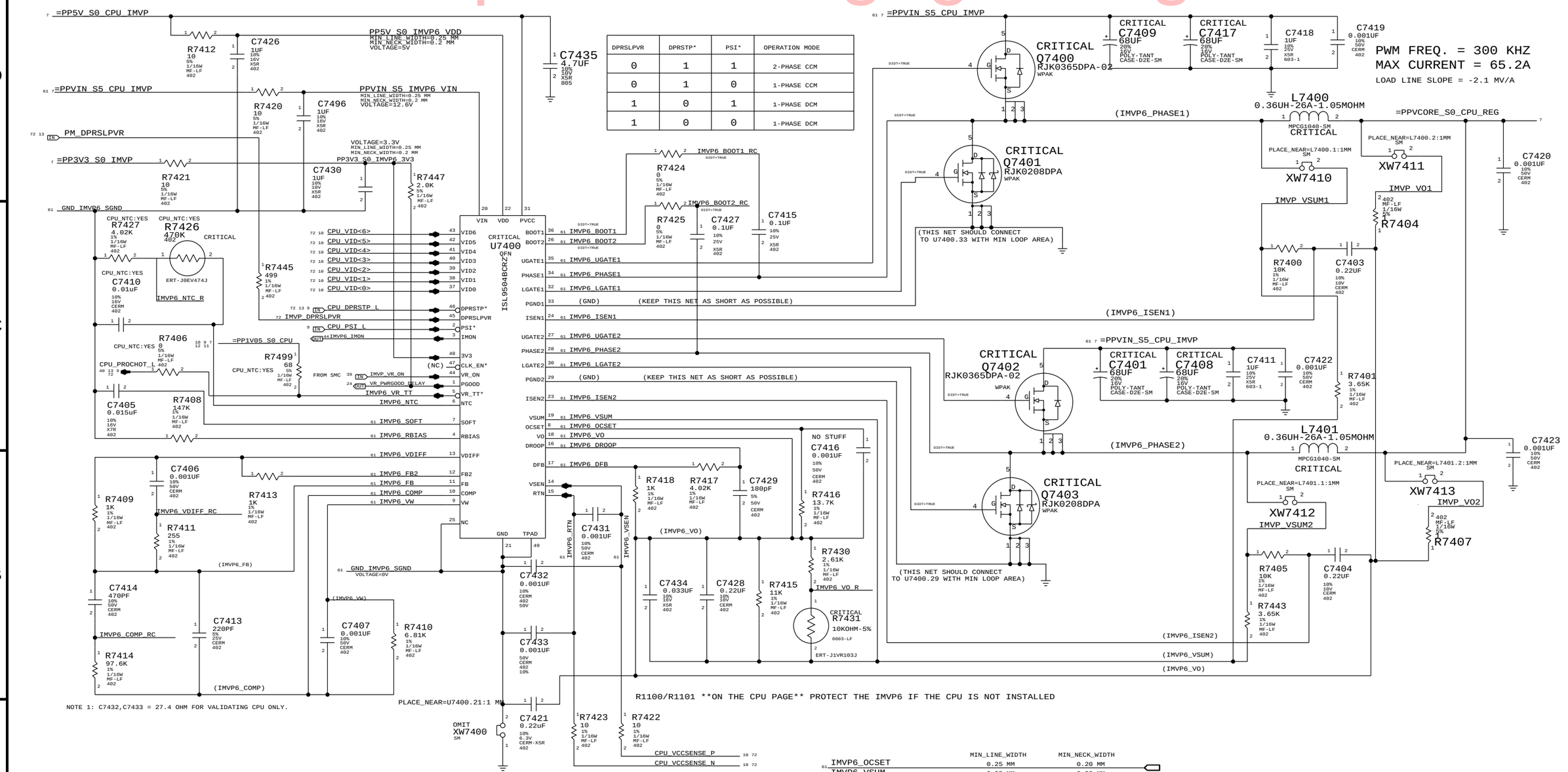

DPRSLPVR	DPRSTP*	PSI*	OPERATION MODE
0	1	1	2-PHASE CCM
0	1	0	1-PHASE CCM
1	0	1	1-PHASE DCM
1	0	0	1-PHASE DCM

NOTE 1: C7432,C7433 = 27.4 OHM FOR VALIDATING CPU ONLY.

R1100/R1101 **ON THE CPU PAGE** PROTECT THE IMVP6 IF THE CPU IS NOT INSTALLED

IMVP6 CPU VCORE REGULATOR

	MIN_LINE_WIDTH	MIN_NECK_WIDTH
IMVP6_PHASE1	1.5 MM	0.25 MM
IMVP6_BOOT1	0.25 MM	0.25 MM
IMVP6_UGATE1	1.5 MM	0.25 MM
IMVP6_LGATE1	1.5 MM	0.25 MM
IMVP6_ISEN1	0.25 MM	0.20 MM

	MIN_LINE_WIDTH	MIN_NECK_WIDTH
IMVP6_PHASE2	0.25 MM	0.25 MM
IMVP6_BOOT2	0.25 MM	0.20 MM
IMVP6_UGATE2	0.25 MM	0.25 MM
IMVP6_LGATE2	0.25 MM	0.25 MM
IMVP6_ISEN2	0.25 MM	0.20 MM

	MIN_LINE_WIDTH	MIN_NECK_WIDTH
IMVP6_OCSET	0.25 MM	0.20 MM
IMVP6_VSUM	0.25 MM	0.20 MM
GND_IMVP6_SGND	0.50 MM	0.20 MM
IMVP6_VO	0.25 MM	0.20 MM
IMVP6_DROOP	0.25 MM	0.20 MM
IMVP6_DFB	0.25 MM	0.20 MM
IMVP6_SOFT	0.25 MM	0.20 MM
IMVP6_RBIAS	0.25 MM	0.20 MM
IMVP6_VDIFF	0.25 MM	0.20 MM
IMVP6_FB2	0.25 MM	0.20 MM
IMVP6_FB	0.25 MM	0.20 MM
IMVP6_COMP	0.25 MM	0.20 MM
IMVP6_VW	0.25 MM	0.20 MM
IMVP6_RTN	0.25 MM	0.20 MM
IMVP6_VSEN	0.25 MM	0.20 MM

K6 NOTES : Q7400-Q7403 CHANGED BACK TO K24 FETS DUE TO LAYOUT
K6 NOTES : BOM OPTION ADDED TO NTC

SYNC MASTER=K24_MLB SYNC DATE=07/20/2009
PAGE TITLE
IMVP6 CPU VCore Regulator

Apple Inc.

DRAWING NUMBER 051-8563 SIZE D
REVISION A.13.0
BRANCH
PAGE 74 OF 109
SHEET 61 OF 80

NOTICE OF PROPRIETARY PROPERTY:
THE INFORMATION CONTAINED HEREIN IS THE PROPRIETARY PROPERTY OF APPLE COMPUTER, INC.
THE POSESSOR AGREES TO THE FOLLOWING:
I TO MAINTAIN THIS DOCUMENT IN CONFIDENCE
II NOT TO REPRODUCE OR COPY IT
III NOT TO REVEAL OR PUBLISH IT IN WHOLE OR PART
IV ALL RIGHTS RESERVED

www.vinafix.vn

http://24hcongnghe.org

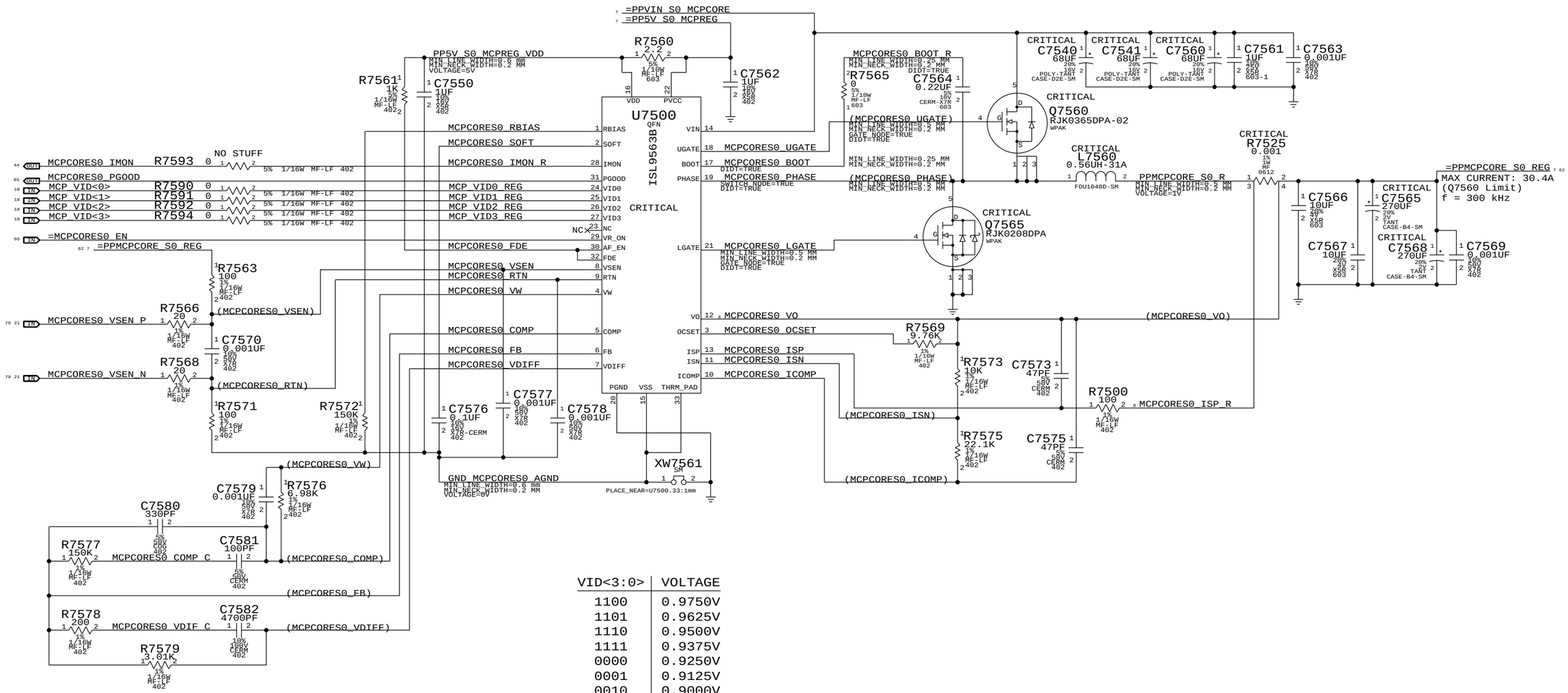

VID<3:0>	VOLTAGE
1100	0.9750V
1101	0.9625V
1110	0.9500V
1111	0.9375V
0000	0.9250V
0001	0.9125V
0010	0.9000V
0011	0.8875V
0100	0.8750V
0101	0.8625V
0110	0.8500V
0111	0.8375V
1000	0.8250V
1001	0.8125V
1010	0.8000V
1011	0.7875V

K6 NOTES : XOR AND INVERTER IS REMOVED, CANNOT SYNC THIS PAGE FROM T27

SYNC_MASTER=T27_MLB SYNC_DATE=08/18/2009

PAGE TITLE: MCP VCore Regulator

Apple Inc.

DRAWING NUMBER: 051-8563 SIZE: D

REVISION: A.13.0

BRANCH:

PAGE: 75 OF 109

SHEET: 62 OF 80

NOTICE OF PROPRIETARY PROPERTY:
THE INFORMATION CONTAINED HEREIN IS THE PROPRIETARY PROPERTY OF APPLE COMPUTER, INC.
THE POSESSOR AGREES TO THE FOLLOWING:
I TO MAINTAIN THIS DOCUMENT IN CONFIDENCE
II NOT TO REPRODUCE OR COPY IT
III NOT TO REVEAL OR PUBLISH IT IN WHOLE OR PART
IV ALL RIGHTS RESERVED

www.vinafix.vn

http://24hcongnghe.org

CPUVTT POWER SUPPLY

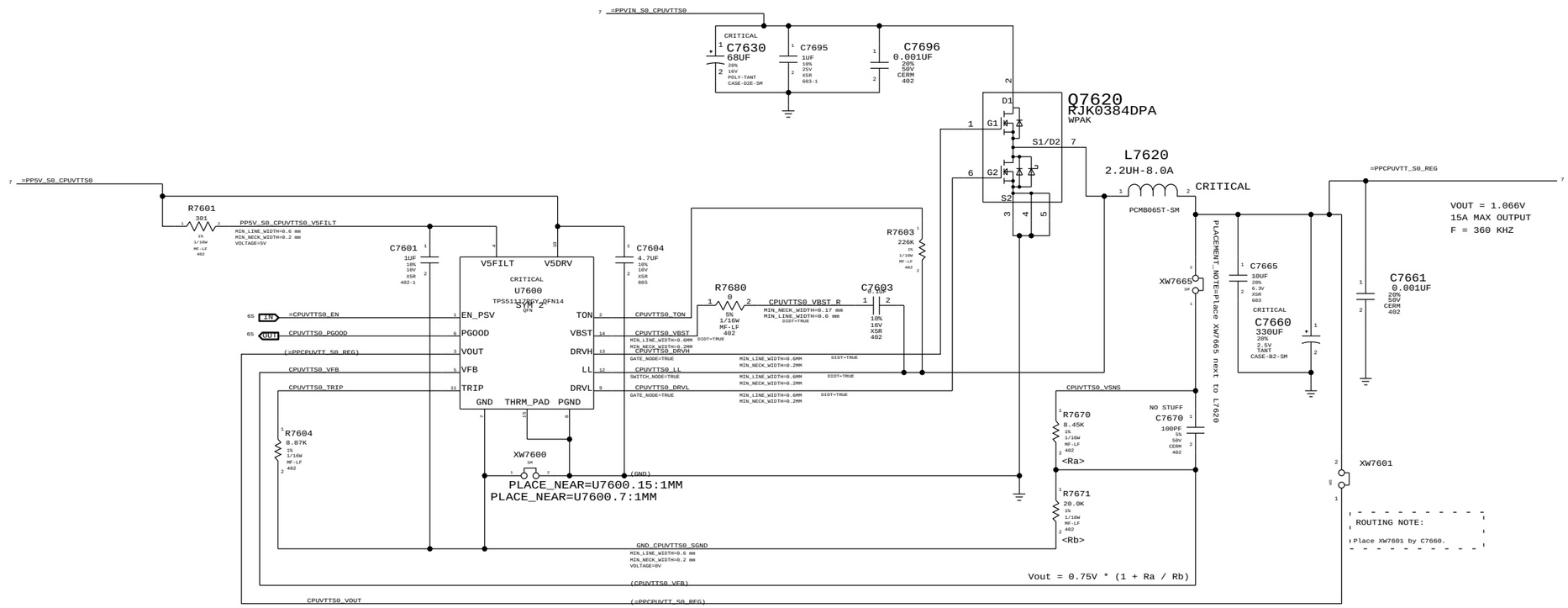

K6 NOTES : Q7620 CHANGED BACK TO K24 FETS DUE TO LAYOUT

SYNC_MASTER=K24_MLB	SYNC_DATE=07/20/2009
PAGE TITLE: CPU VTT(1.05V) SUPPLY	
Apple Inc.	DRAWING NUMBER: 051-8563 / SIZE: D
	REVISION: A.13.0
NOTICE OF PROPRIETARY PROPERTY: THE INFORMATION CONTAINED HEREIN IS THE PROPRIETARY PROPERTY OF APPLE COMPUTER, INC. THE POSESSOR AGREES TO THE FOLLOWING: I TO MAINTAIN THIS DOCUMENT IN CONFIDENCE II NOT TO REPRODUCE OR COPY IT III NOT TO REVEAL OR PUBLISH IT IN WHOLE OR PART IV ALL RIGHTS RESERVED	BRANCH
	PAGE: 76 OF 109
	SHEET: 63 OF 80

www.vinafix.vn

http://24hcongnghe.org

1.2V ENET Switcher

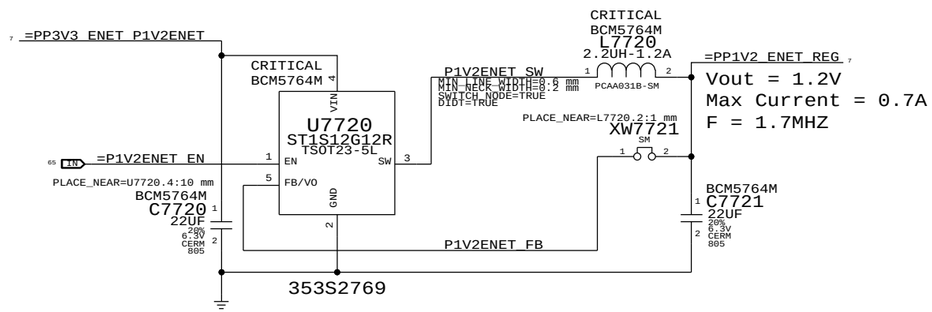

BCM57765 Internal Switcher Support

(This may be required to use BCM57765)

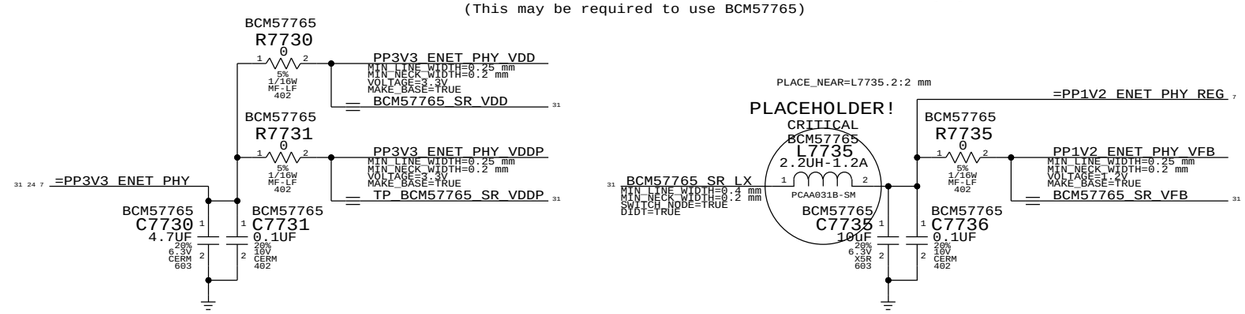

1.05V S0 MCP PLL LDO

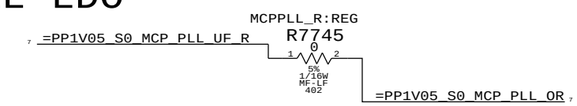

1.5V S0 Regulator

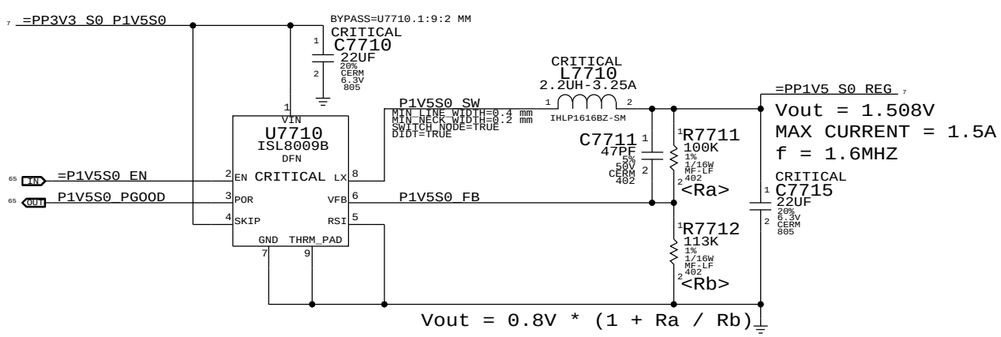

BOMOPTIONs:

MCPPLL_R:LDO - 1.05V S0 USED FOR MCP PLL LDO POWER.
MCPPLL_LDO - STUFFS U7740 AND RELATED CIRCUITRY.
TO USE U7740, MCPPLL_R:LDO AND MCPPLL_LDO MUST BE ACTIVE.
TO USE 1.05V S0, MCPPLL_R:REG MUST BE ACTIVE, MCPPLL_LDO CAN BE ACTIVE, MCPPLL_R:LDO MUST BE INACTIVE.

MCP 0.9V S5 (AUXC) Switcher

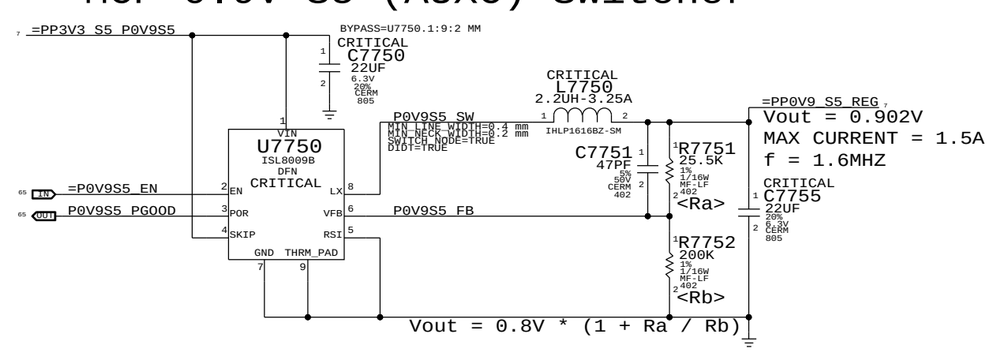

1.8V S0 Switcher

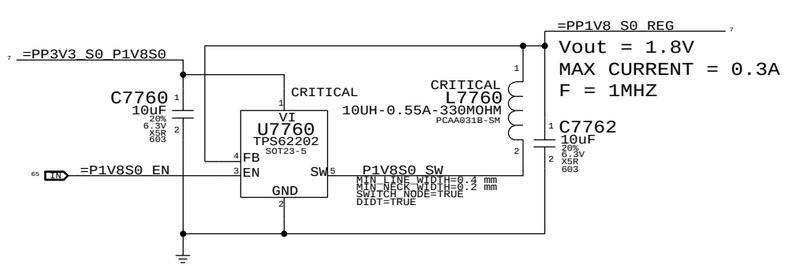

K6 NOTES : C7710 AND C7750 HAS BYPASS PROPERTY, SHOULD BE ADDED INCASE THIS PAGE IS SYNC'ED FROM T27

SYNC_MASTER=T27_MLB	SYNC_DATE=09/30/2009
PAGE TITLE: Misc Power Supplies	
Apple Inc.	DRAWING NUMBER: 051-8563 SIZE: D
	REVISION: A.13.0
NOTICE OF PROPRIETARY PROPERTY: THE INFORMATION CONTAINED HEREIN IS THE PROPRIETARY PROPERTY OF APPLE COMPUTER, INC. THE POSESSOR AGREES TO THE FOLLOWING: I TO MAINTAIN THIS DOCUMENT IN CONFIDENCE II NOT TO REPRODUCE OR COPY IT III NOT TO REVEAL OR PUBLISH IT IN WHOLE OR PART IV ALL RIGHTS RESERVED	BRANCH
	PAGE: 77 OF 109
	SHEET: 64 OF 80

www.vinafix.vn

http://24hconghghe.org

S5 Rail Enables & PGOOD

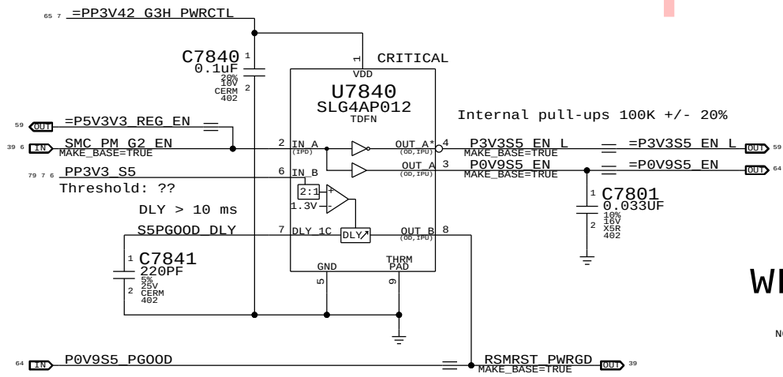

Power Control Signals

State	SMC_PM_G2_ENABLE	PM_SLP_S4_L	PM_SLP_S3_L
Run (S0)	1	1	1
Sleep (S3)	1	1	0
Soft-Off (S5)	1	0	0
Battery Off (G3Hot)	0	0	0

ISL6259 Frequency Select

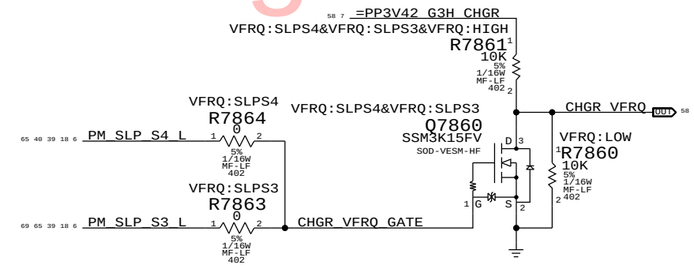

WLAN Enable Generation

"WLAN" = ("S3" && "AP_PWR_EN" && ("AC" || "S0"))

NOTE: S3 term is guaranteed by S3 pull-up on open-drain AP_PWR_EN signal.

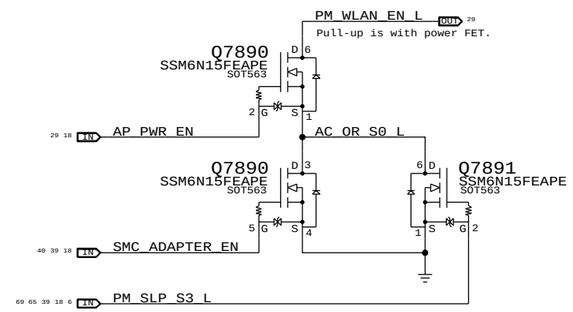

S3 Rail Enables

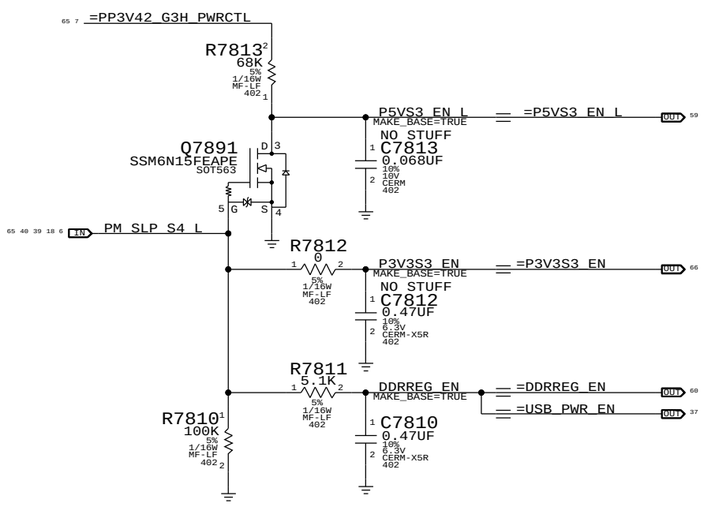

ENET Rail Enables

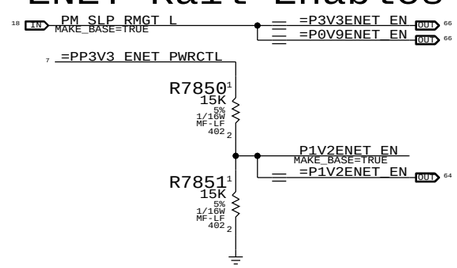

S0 Rail PGOOD Circuitry

S0 Rail PGOOD (ISL Version)

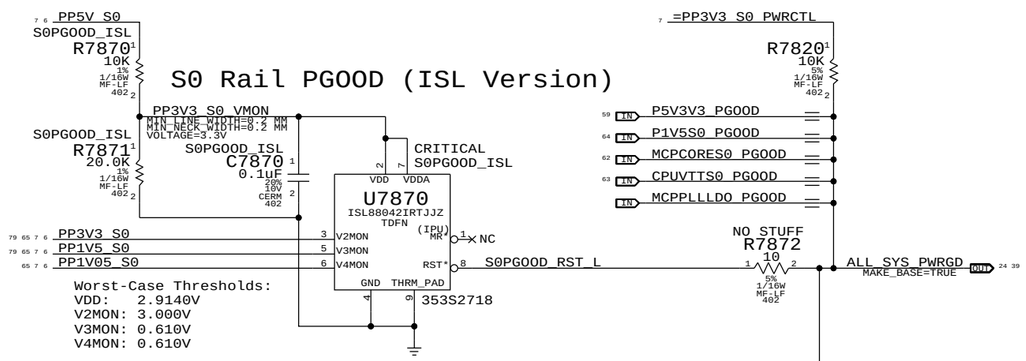

Worst-Case Thresholds:
VDD: 2.9140V
V2MON: 3.000V
V3MON: 0.610V
V4MON: 0.610V

S0 Rail PGOOD (BJT Version)

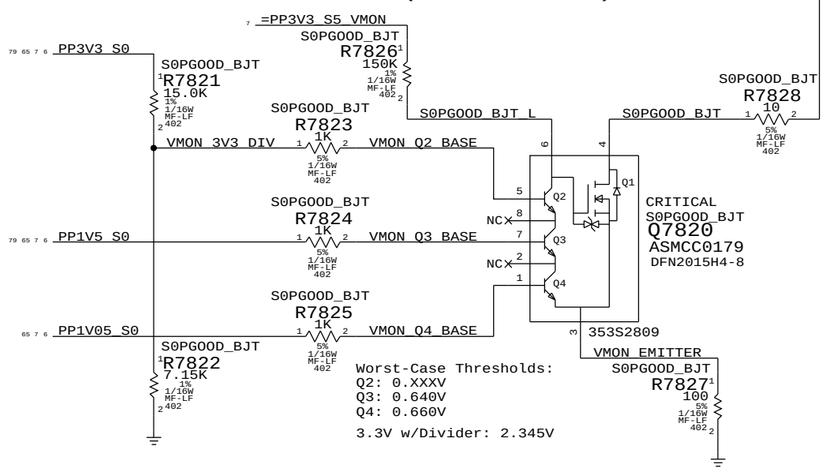

Worst-Case Thresholds:
Q2: 0.XXXV
Q3: 0.640V
Q4: 0.660V

3.3V w/Divider: 2.345V

S0 Rail Enables

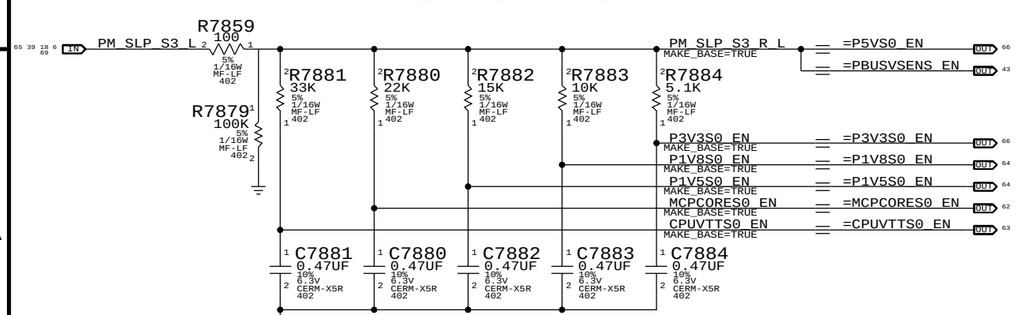

VTT Rail Enable

VTT rail must ramp up in about the same time as MEMVDD rail (Q2300).

K6 HAS A PULL UP ON DDRREG_PGOOD. REMOVED ALIAS TO TP SIGNAL

SYNC MASTER=T27 MLB SYNC DATE=11/24/2009

PAGE TITLE: Power Sequencing

Apple Inc.

DRAWING NUMBER: 051-8563 SIZE: D

REVISION: A.13.0

BRANCH

PAGE: 78 OF 109

SHEET: 65 OF 80

NOTICE OF PROPRIETARY PROPERTY:
THE INFORMATION CONTAINED HEREIN IS THE PROPRIETARY PROPERTY OF APPLE COMPUTER, INC.
THE POSESSOR AGREES TO THE FOLLOWING:
I TO MAINTAIN THIS DOCUMENT IN CONFIDENCE
II NOT TO REPRODUCE OR COPY IT
III NOT TO REVEAL OR PUBLISH IT IN WHOLE OR PART
IV ALL RIGHTS RESERVED

www.vinafix.vn

http://24hcongnghe.org

3.3V S3 FET

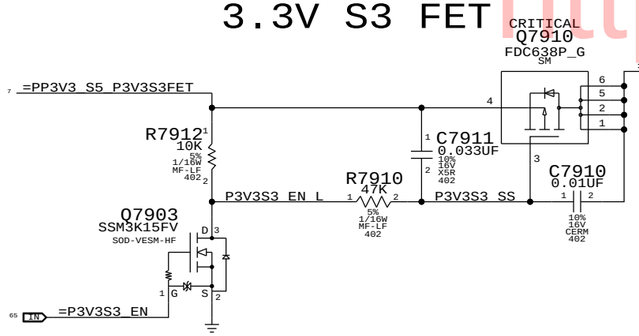

Q7910

MOSFET	FDC638P
Type	P-Channel
Rds(on)	65 mOhm @2.5V
ID(max)	2.0 A @85C
Loading	0.606 A (EDP)

3.3V ENET Switch

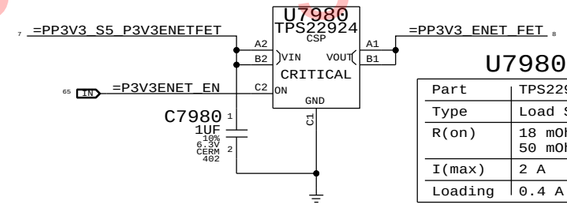

U7980

Part	TPS22924C
Type	Load Switch
R(on)	18 mOhm Typ 50 mOhm Max
I(max)	2 A
Loading	0.4 A (EDP)

3.3V S0 FET

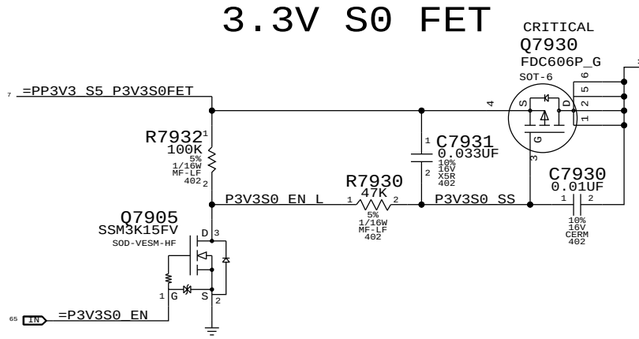

Q7930

MOSFET	FDC606P
Type	P-Channel
Rds(on)	35 mOhm @2.5V
ID(max)	2.7 A @85C
Loading	1.895 A (EDP)

0.9V ENET FET

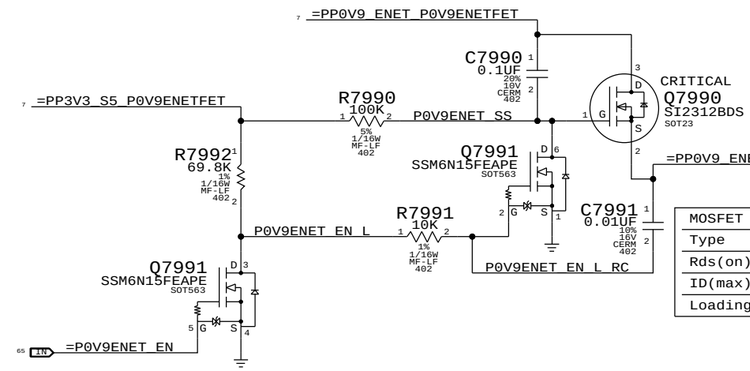

Q7990

MOSFET	SI2312BDS
Type	N-Channel
Rds(on)	37 mOhm @2.5V
ID(max)	3.25 A @85C
Loading	0.140 A (EDP)

5V S0 FET

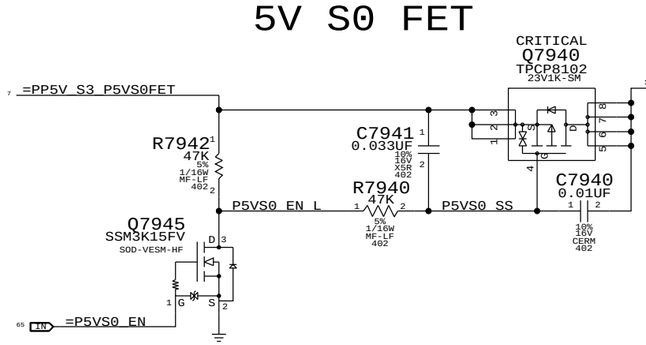

Q7940

Part	TPCP8102
Type	P-Channel
Rds(on)	14 mOhm @4.5V
Loading	1.675 A (EDP)

SYNC_MASTER=T27_MLB SYNC_DATE=08/27/2009

PAGE TITLE: Power FETs

Apple Inc.

DRAWING NUMBER: 051-8563 SIZE: D

REVISION: A.13.0

BRANCH:

PAGE: 79 OF 109

SHEET: 66 OF 80

NOTICE OF PROPRIETARY PROPERTY:
THE INFORMATION CONTAINED HEREIN IS THE PROPRIETARY PROPERTY OF APPLE COMPUTER, INC.
THE POSESSOR AGREES TO THE FOLLOWING:
I TO MAINTAIN THIS DOCUMENT IN CONFIDENCE
II NOT TO REPRODUCE OR COPY IT
III NOT TO REVEAL OR PUBLISH IT IN WHOLE OR PART
IV ALL RIGHTS RESERVED

www.vinafix.vn

http://24hcongnghe.org

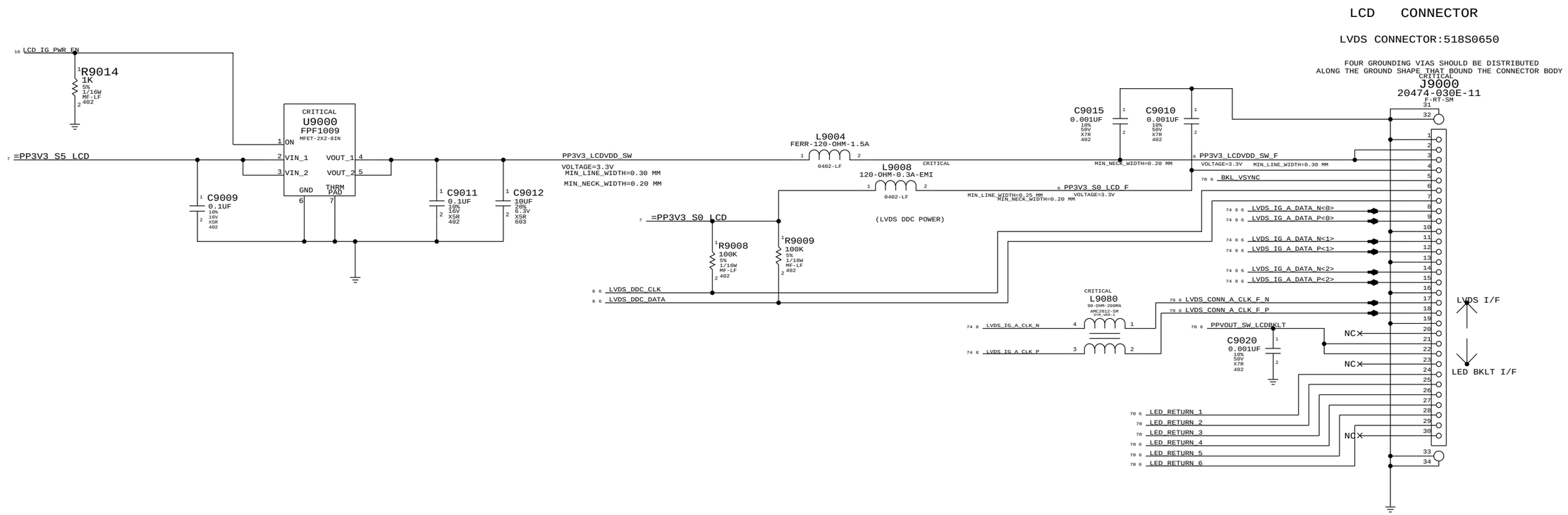

SYNC_MASTER=K24_MLB SYNC_DATE=07/20/2009

PAGE TITLE
LVDS CONNECTOR

Apple Inc.

DRAWING NUMBER 051-8563 SIZE D
REVISION A.13.0
BRANCH
PAGE 90 OF 109
SHEET 67 OF 80

NOTICE OF PROPRIETARY PROPERTY:
THE INFORMATION CONTAINED HEREIN IS THE PROPRIETARY PROPERTY OF APPLE COMPUTER, INC.
THE POSESSOR AGREES TO THE FOLLOWING:
I TO MAINTAIN THIS DOCUMENT IN CONFIDENCE
II NOT TO REPRODUCE OR COPY IT
III NOT TO REVEAL OR PUBLISH IT IN WHOLE OR PART
IV ALL RIGHTS RESERVED

www.vinafix.vn

http://24hcongnghe.org

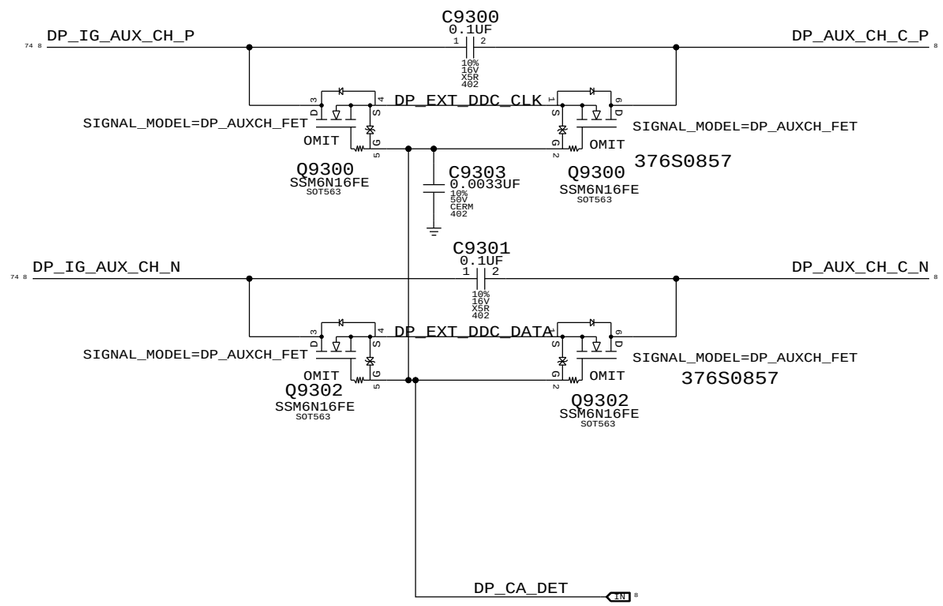

PART NUMBER	QTY	DESCRIPTION	REFERENCE DES	CRITICAL	BOM OPTION
376S0859	2	XSTR,FT,N-CH,DUAL,SOT-563	Q9300,Q9302	CRITICAL	

SYNC_MASTER=K69_MLB SYNC_DATE=08/12/2009

PAGE TITLE
DISPLAYPORT SUPPORT

Apple Inc.

DRAWING NUMBER 051-8563 SIZE D

REVISION A.13.0

BRANCH

PAGE 93 OF 109

SHEET 68 OF 80

NOTICE OF PROPRIETARY PROPERTY:
THE INFORMATION CONTAINED HEREIN IS THE PROPRIETARY PROPERTY OF APPLE COMPUTER, INC.
THE POSESSOR AGREES TO THE FOLLOWING:
I TO MAINTAIN THIS DOCUMENT IN CONFIDENCE
II NOT TO REPRODUCE OR COPY IT
III NOT TO REVEAL OR PUBLISH IT IN WHOLE OR PART
IV ALL RIGHTS RESERVED

www.vinafix.vn

http://24hcongnghe.org

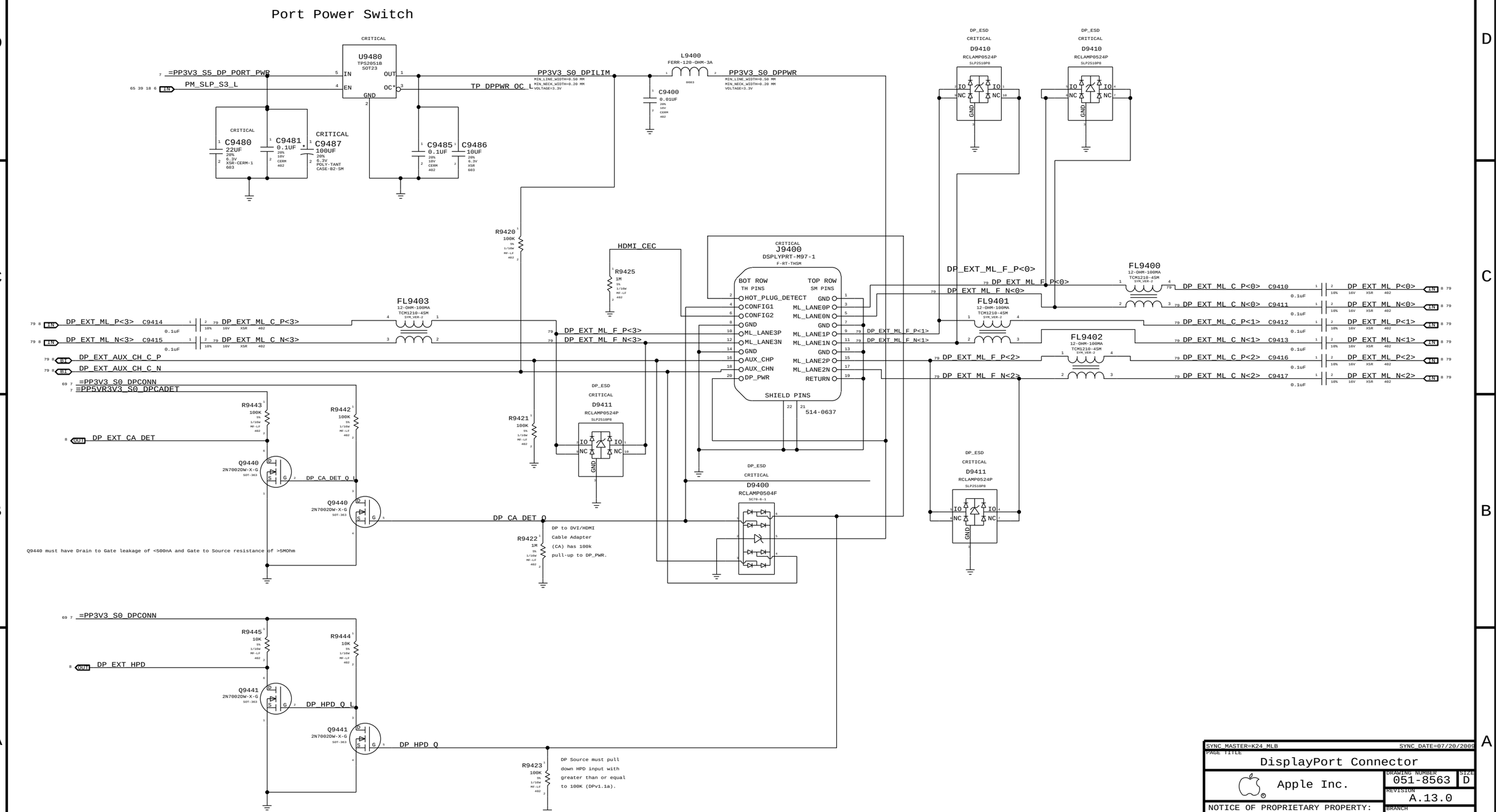

SYNC_MASTER=K24_MLB SYNC_DATE=07/20/2009

PAGE TITLE: DisplayPort Connector

Apple Inc.

DRAWING NUMBER: 051-8563 SIZE: D

REVISION: A.13.0

BRANCH

PAGE: 94 OF 109

SHEET: 69 OF 80

NOTICE OF PROPRIETARY PROPERTY:
THE INFORMATION CONTAINED HEREIN IS THE PROPRIETARY PROPERTY OF APPLE COMPUTER, INC.
THE POSESSOR AGREES TO THE FOLLOWING:
I TO MAINTAIN THIS DOCUMENT IN CONFIDENCE
II NOT TO REPRODUCE OR COPY IT
III NOT TO REVEAL OR PUBLISH IT IN WHOLE OR PART
IV ALL RIGHTS RESERVED

www.vinafix.vn

http://24hcongnghe.org

*L9701, D9701, C9796, C9797, C9799, C9712 AND C9713 SHOULD ALL BE PLACED NEAR EACHOTHER.
*PPBUS_SW_LCDBKLT_PWR_SW SHOULD BE KEPT AS SHORT AS POSSIBLE.
*LCD_BKLT_PWM SHOULD BE AWAY FROM BOOST CIRCUIT

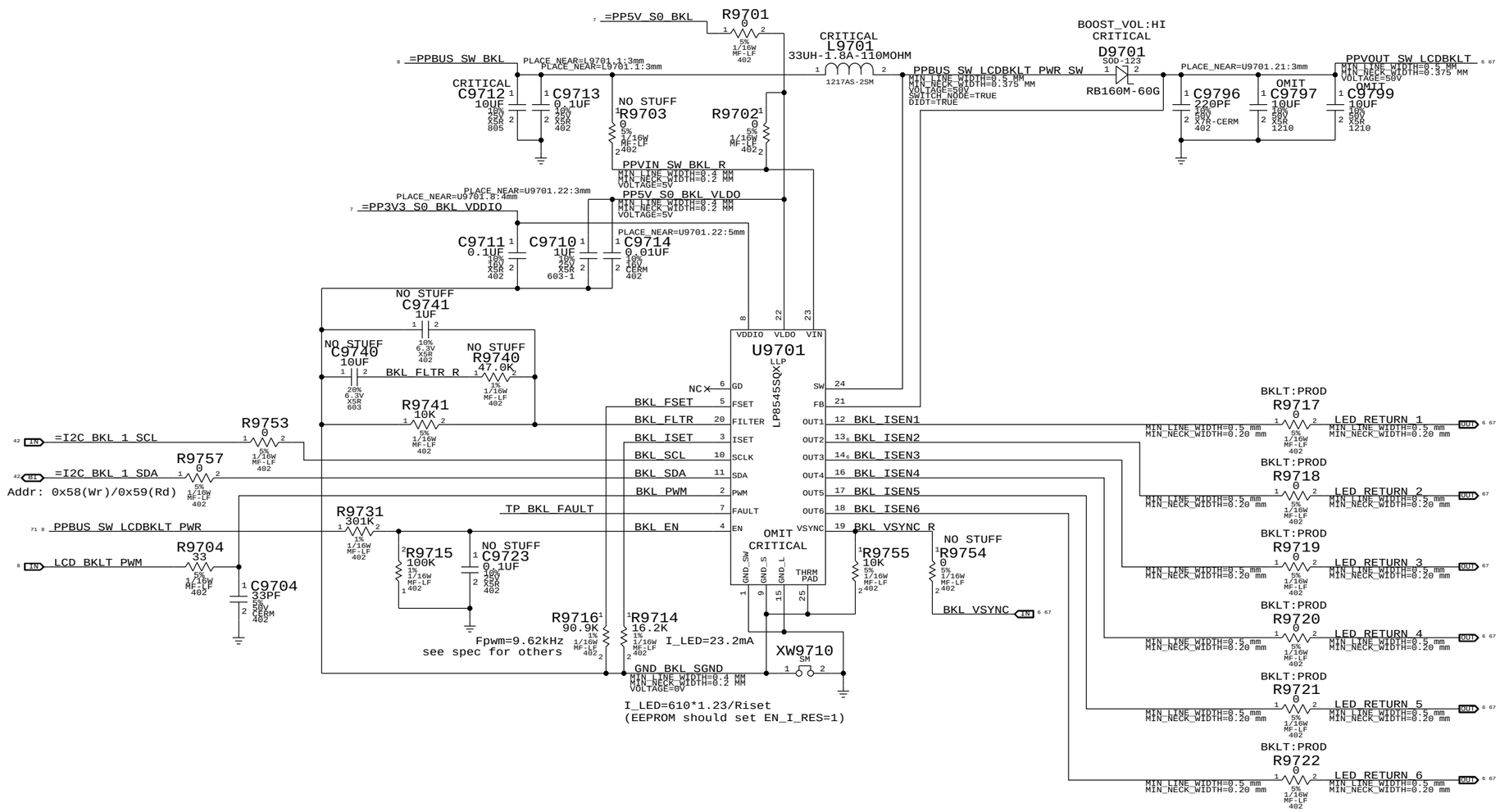

FOR LP8543:
STUFF R9741
NO STUFF R9740, C9740, C9741, R9754

PART NUMBER	QTY	DESCRIPTION	REFERENCE DES	CRITICAL	BOM OPTION
103S0198	3	RES,THIN FLIM,1/16W,10.2 OHM,0.1,0402,SM	R9717,R9718,R9719		BKLT:ENG
103S0198	3	RES,THIN FLIM,1/16W,10.2 OHM,0.1,0402,SM	R9720,R9721,R9722		BKLT:ENG
371S0580	1	SCHOTTKY BARRIER DIODE RB160M-40	D9701		BOOST_VOL:LOW
138S0673	2	CAP, 50V, 1210, X5R, 10UF+/-10%	C9797,C9799	CRITICAL	

10.2 ohm resistors for current measurement on LED strings.

SYNC_MASTER=K69_MLB SYNC_DATE=08/27/2009

PAGE TITLE
LCD Backlight Driver

Apple Inc.

DRAWING NUMBER 051-8563 SIZE D
REVISION A.13.0
BRANCH
PAGE 97 OF 109
SHEET 70 OF 80

NOTICE OF PROPRIETARY PROPERTY:
THE INFORMATION CONTAINED HEREIN IS THE PROPRIETARY PROPERTY OF APPLE COMPUTER, INC.
THE POSESSOR AGREES TO THE FOLLOWING:
I TO MAINTAIN THIS DOCUMENT IN CONFIDENCE
II NOT TO REPRODUCE OR COPY IT
III NOT TO REVEAL OR PUBLISH IT IN WHOLE OR PART
IV ALL RIGHTS RESERVED

www.vinafix.vn

http://24hcongnghe.org

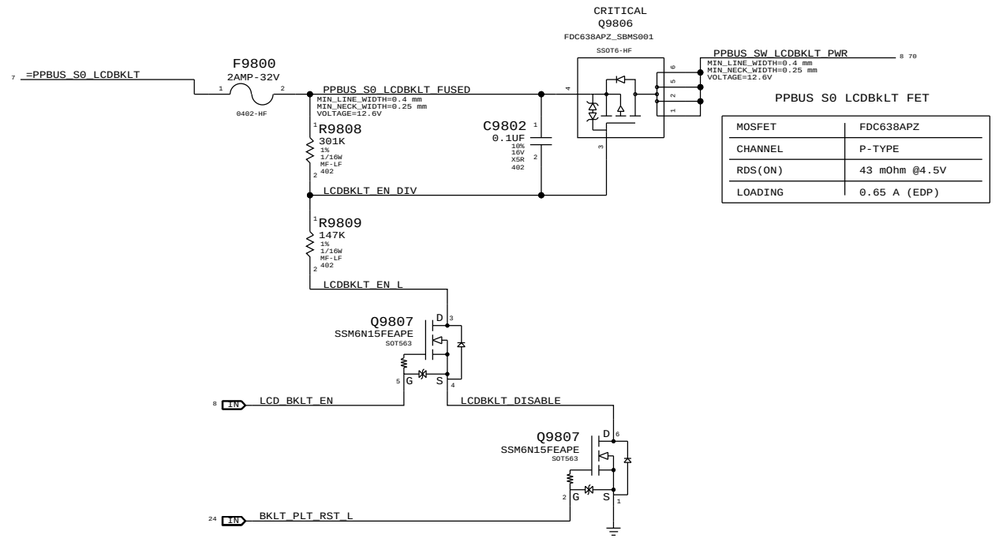

PPBUS S0 LCDBkLT FET

MOSFET	FDC638APZ
CHANNEL	P-TYPE
RDS(ON)	43 mOhm @4.5V
LOADING	0.65 A (EDP)

SYNC_MASTER=T27_MLB SYNC_DATE=07/28/2009

PAGE TITLE
LCD Backlight Support

Apple Inc.

DRAWING NUMBER 051-8563 SIZE D

REVISION A.13.0

BRANCH

PAGE 98 OF 109

SHEET 71 OF 80

NOTICE OF PROPRIETARY PROPERTY:
THE INFORMATION CONTAINED HEREIN IS THE PROPRIETARY PROPERTY OF APPLE COMPUTER, INC.
THE POSESSOR AGREES TO THE FOLLOWING:
I TO MAINTAIN THIS DOCUMENT IN CONFIDENCE
II NOT TO REPRODUCE OR COPY IT
III NOT TO REVEAL OR PUBLISH IT IN WHOLE OR PART
IV ALL RIGHTS RESERVED

www.vinafix.vn

http://24hcongnghe.org

FSB (Front-Side Bus) Constraints

PHYSICAL_RULE_SET	LAYER	ALLOW ROUTE ON LAYER?	MINIMUM LINE WIDTH	MINIMUM NECK WIDTH	MAXIMUM NECK LENGTH	DIFFPAIR PRIMARY GAP	DIFFPAIR NECK GAP
FSB_50S	*	=50_OHM_SE	=50_OHM_SE	=50_OHM_SE	=50_OHM_SE	=STANDARD	=STANDARD
FSB_DSTB_50S	*	=50_OHM_SE	=50_OHM_SE	=50_OHM_SE	=50_OHM_SE	=1:1_DIFFPAIR	=1:1_DIFFPAIR

SPACING_RULE_SET	LAYER	LINE-TO-LINE SPACING	WEIGHT
FSB_DATA	*	=2x_DIELECTRIC	?
FSB_DSTB	*	=3x_DIELECTRIC	?
FSB_ADDR	*	=STANDARD	?
FSB_ADSTB	*	=2x_DIELECTRIC	?
FSB_1X	*	=STANDARD	?

SPACING_RULE_SET	LAYER	LINE-TO-LINE SPACING	WEIGHT
FSB_DATA	TOP,BOTTOM	=4x_DIELECTRIC	?
FSB_DSTB	TOP,BOTTOM	=5x_DIELECTRIC	?
FSB_ADDR	TOP,BOTTOM	=3x_DIELECTRIC	?
FSB_ADSTB	TOP,BOTTOM	=4x_DIELECTRIC	?
FSB_1X	TOP,BOTTOM	=3x_DIELECTRIC	?

All 4x/2x/1x FSB signals with impedance requirements are 50-ohm single-ended.

FSB 4X signals / groups shown in signal table on right.
Signals within each 4x group should be matched within 5 ps of strobe.
DSTB# complementary pairs should be matched within 1 ps of each other, all DSTB#s matched to +/- 135 ps.
Spacing is 2x dielectric between DATA#, DINV# signals, with 3x dielectric spacing to the DSTB#s.

FSB 2X signals / groups shown in signal table on right.
Signals within each 2x group should be matched within 20 ps. ADTSB#s should be matched +/- 270 ps.
Spacing is 1x dielectric between ADDR#, REQ# signals, with 2x dielectric spacing to ADSTB#.

FSB 1X signals shown in signal table on right.

Intel Design Guide recommends FSB signals be routed only on internal layers.

NOTE: Intel Design Guide allows closer spacing if signal lengths can be shortened.

SOURCE: MCP89 Interface DG (DG-04625-001_v0.9), Section 2.1
SOURCE: Santa Rosa Platform DG, Rev 1.5 (#22294), Sections 4.2 & 4.3

CPU Signal Constraints

PHYSICAL_RULE_SET	LAYER	ALLOW ROUTE ON LAYER?	MINIMUM LINE WIDTH	MINIMUM NECK WIDTH	MAXIMUM NECK LENGTH	DIFFPAIR PRIMARY GAP	DIFFPAIR NECK GAP
CPU_50S	*	=50_OHM_SE	=50_OHM_SE	=50_OHM_SE	=50_OHM_SE	=STANDARD	=STANDARD
CPU_27P4S	*	=27P4_OHM_SE	=27P4_OHM_SE	=27P4_OHM_SE	=27P4_OHM_SE	7 MIL	7 MIL

NOTE: 7 mil gap is for VCCSense pair, which Intel says to route with 7 mil spacing without specifying a target impedance.

SPACING_RULE_SET	LAYER	LINE-TO-LINE SPACING	WEIGHT
CPU_AGTL	*	=STANDARD	?
CPU_8MIL	*	8 MIL	?
CPU_COMP	*	25 MIL	?
CPU_GTLREF	*	25 MIL	?
CPU_ITP	*	=2:1_SPACING	?
CPU_VCCSENSE	*	25 MIL	?

SPACING_RULE_SET	LAYER	LINE-TO-LINE SPACING	WEIGHT
CPU_AGTL	TOP,BOTTOM	=2x_DIELECTRIC	?

SR DG recommends at least 25 mils, >50 mils preferred

Most CPU signals with impedance requirements are 55-ohm single-ended.
Some signals require 27.4-ohm single-ended impedance.

SOURCE: MCP89 Interface DG (DG-04625-001_v0.9), Section 2.1
SOURCE: Santa Rosa Platform DG, Rev 0.9 (#20517), Sections 4.4 & 5.8.2.4

MCP FSB COMP Signal Constraints

PHYSICAL_RULE_SET	LAYER	ALLOW ROUTE ON LAYER?	MINIMUM LINE WIDTH	MINIMUM NECK WIDTH	MAXIMUM NECK LENGTH	DIFFPAIR PRIMARY GAP	DIFFPAIR NECK GAP
MCP_50S	*	=50_OHM_SE	=50_OHM_SE	=50_OHM_SE	=50_OHM_SE	=STANDARD	=STANDARD

SPACING_RULE_SET	LAYER	LINE-TO-LINE SPACING	WEIGHT
MCP_FSB_COMP	*	8 MIL	?

SOURCE: MCP89 Interface DG (DG-04625-001_v0.9), Section 2.1.4

FSB Clock Constraints

PHYSICAL_RULE_SET	LAYER	ALLOW ROUTE ON LAYER?	MINIMUM LINE WIDTH	MINIMUM NECK WIDTH	MAXIMUM NECK LENGTH	DIFFPAIR PRIMARY GAP	DIFFPAIR NECK GAP
CLK_FSB_100D	*	=100_OHM_DIFF	=100_OHM_DIFF	=100_OHM_DIFF	=100_OHM_DIFF	=100_OHM_DIFF	=100_OHM_DIFF

SPACING_RULE_SET	LAYER	LINE-TO-LINE SPACING	WEIGHT
CLK_FSB	*	=3x_DIELECTRIC	?

SPACING_RULE_SET	LAYER	LINE-TO-LINE SPACING	WEIGHT
CLK_FSB	TOP,BOTTOM	=4x_DIELECTRIC	?

SOURCE: MCP79 Interface DG (DG-03328-001_v01), Section 2.2.5

CPU / FSB Net Properties

	ELECTRICAL_CONSTRAINT_SET	NET_TYPE PHYSICAL	NET_TYPE SPACING		
FSB 4X Signal Groups	FSB_DATA_GROUP0	FSB_50S	FSB_DATA	FSB_D_L<15..0>	6 9 13
	FSB_DATA_GROUP0	FSB_50S	FSB_DATA	FSB_DINV_L<0>	6 9 13
	FSB_DSTB0	FSB_DSTB_50S	FSB_DSTB	FSB_DSTB_L_P<0>	6 9 13
	FSB_DSTB0	FSB_DSTB_50S	FSB_DSTB	FSB_DSTB_L_N<0>	6 9 13
	FSB_DATA_GROUP1	FSB_50S	FSB_DATA	FSB_D_L<31..16>	6 9 13
	FSB_DATA_GROUP1	FSB_50S	FSB_DATA	FSB_DINV_L<1>	6 9 13
	FSB_DSTB1	FSB_DSTB_50S	FSB_DSTB	FSB_DSTB_L_P<1>	6 9 13
	FSB_DSTB1	FSB_DSTB_50S	FSB_DSTB	FSB_DSTB_L_N<1>	6 9 13
	FSB_DATA_GROUP2	FSB_50S	FSB_DATA	FSB_D_L<47..32>	6 9 13
	FSB_DATA_GROUP2	FSB_50S	FSB_DATA	FSB_DINV_L<2>	6 9 13
	FSB_DSTB2	FSB_DSTB_50S	FSB_DSTB	FSB_DSTB_L_P<2>	6 9 13
	FSB_DSTB2	FSB_DSTB_50S	FSB_DSTB	FSB_DSTB_L_N<2>	6 9 13
	FSB_DATA_GROUP3	FSB_50S	FSB_DATA	FSB_D_L<63..48>	6 9 13
	FSB_DATA_GROUP3	FSB_50S	FSB_DATA	FSB_DINV_L<3>	6 9 13
	FSB_DSTB3	FSB_DSTB_50S	FSB_DSTB	FSB_DSTB_L_P<3>	6 9 13
	FSB_DSTB3	FSB_DSTB_50S	FSB_DSTB	FSB_DSTB_L_N<3>	6 9 13
FSB 2X Signals	FSB_ADDR_GROUP0	FSB_50S	FSB_ADDR	FSB_A_L<16..3>	6 9 13
	FSB_ADDR_GROUP0	FSB_50S	FSB_ADDR	FSB_REQ_L<4..0>	6 9 13
	FSB_ADSTB0	FSB_50S	FSB_ADSTB	FSB_ADSTB_L<0>	6 9 13
	FSB_ADDR_GROUP1	FSB_50S	FSB_ADDR	FSB_A_L<35..17>	6 9 13
	FSB_ADSTB1	FSB_50S	FSB_ADSTB	FSB_ADSTB_L<1>	6 9 13
FSB 1X Signals	FSB_1X	FSB_50S	FSB_1X	FSB_ADS_L	6 9 13
	FSB_BREQ0_L	FSB_50S	FSB_1X	FSB_BREQ0_L	9 13
	FSB_1X	FSB_50S	FSB_1X	FSB_BNR_L	9 13
	FSB_1X	FSB_50S	FSB_1X	FSB_BPRI_L	9 13
	FSB_1X	FSB_50S	FSB_1X	FSB_DBSY_L	9 13
	FSB_1X	FSB_50S	FSB_1X	FSB_DEFER_L	9 13
	FSB_1X	FSB_50S	FSB_1X	FSB_DRDY_L	9 13
	FSB_1X	FSB_50S	FSB_1X	FSB_HIT_L	6 9 13
	FSB_1X	FSB_50S	FSB_1X	FSB_HITM_L	6 9 13
	FSB_1X	FSB_50S	FSB_1X	FSB_LOCK_L	6 9 13
	FSB_CPURST_L	FSB_50S	FSB_1X	FSB_CPURST_L	9 12 13
	FSB_1X	FSB_50S	FSB_1X	FSB_RS_L<2..0>	9 13
	FSB_1X	FSB_50S	FSB_1X	FSB_TRDY_L	9 13
	CPU_ASYNC	CPU_50S	CPU_AGTL	CPU_A20M_L	9 13
	CPU_BSEL	CPU_50S	CPU_AGTL	CPU_BSEL<2..0>	8 9
	CPU_FERR_L	CPU_50S	CPU_8MIL	CPU_FERR_L	9 13
	CPU_ASYNC	CPU_50S	CPU_AGTL	CPU_IGNNE_L	9 13
	CPU_INIT_L	CPU_50S	CPU_AGTL	CPU_INIT_L	9 13
	CPU_ASYNC_R	CPU_50S	CPU_AGTL	CPU_INTR	9 13
	CPU_ASYNC_R	CPU_50S	CPU_AGTL	CPU_NMI	9 13
	CPU_PROCHOT_L	CPU_50S	CPU_AGTL	CPU_PROCHOT_L	9 13 40 61
	CPU_PWRGD	CPU_50S	CPU_AGTL	CPU_PWRGD	9 12 13
	CPU_ASYNC	CPU_50S	CPU_AGTL	CPU_SMI_L	9 13
	CPU_ASYNC	CPU_50S	CPU_AGTL	CPU_STPCLK_L	9 13
	PM_THRMTRIP_L	CPU_50S	CPU_8MIL	PM_THRMTRIP_L	9 13 40
	FSB_CPUSLP_L	CPU_50S	CPU_AGTL	FSB_CPUSLP_L	9 13
	CPU_FROM_SB	CPU_50S	CPU_AGTL	CPU_DPSLP_L	9 13
	CPU_DPRSTP_L	CPU_50S	CPU_AGTL	CPU_DPRSTP_L	9 13 61
	CPU_ASYNC	CPU_50S	CPU_AGTL	FSB_DPWR_L	9 13
	FSB_CLK_CPU	CLK_FSB_100D	CLK_FSB	FSB_CLK_CPU_P	9 13
	FSB_CLK_CPU	CLK_FSB_100D	CLK_FSB	FSB_CLK_CPU_N	9 13
	FSB_CLK_ITP	CLK_FSB_100D	CLK_FSB	FSB_CLK_ITP_P	12 13
	FSB_CLK_ITP	CLK_FSB_100D	CLK_FSB	FSB_CLK_ITP_N	12 13
	FSB_CLK_MCP	CLK_FSB_100D	CLK_FSB	FSB_CLK_MCP_P	13
	FSB_CLK_MCP	CLK_FSB_100D	CLK_FSB	FSB_CLK_MCP_N	13
	CPU_IERR_L	CPU_50S		CPU_IERR_L	9
	PM_DPRSLPVR	CPU_50S	CPU_AGTL	PM_DPRSLPVR	13 61
	(See above)	CPU_50S	CPU_AGTL	IMVP_DPRSLPVR	61
	MCP_CPU_COMP	MCP_50S	MCP_FSB_COMP	MCP_BCLK_VML_COMP_VDD	13
	MCP_CPU_COMP	MCP_50S	MCP_FSB_COMP	MCP_BCLK_VML_COMP_GND	13
	MCP_CPU_COMP	MCP_50S	MCP_FSB_COMP	MCP_CPU_COMP_VCC	13
	MCP_CPU_COMP	MCP_50S	MCP_FSB_COMP	MCP_CPU_COMP_GND	13
	CPU_GTLREF	CPU_50S	CPU_GTLREF	CPU_GTLREF	9 28
	CPU_COMP	CPU_50S	CPU_COMP	CPU_COMP<3>	9
	CPU_COMP	CPU_27P4S	CPU_COMP	CPU_COMP<2>	9
	CPU_COMP	CPU_50S	CPU_COMP	CPU_COMP<1>	9
	CPU_COMP	CPU_27P4S	CPU_COMP	CPU_COMP<0>	9
	XDP_TDI	CPU_50S	CPU_ITP	XDP_TDI	9 12
	XDP_TDO	CPU_50S	CPU_ITP	XDP_TDO	9 12
	XDP_TMS	CPU_50S	CPU_ITP	XDP_TMS	9 12
	XDP_TCK	CPU_50S	CPU_ITP	XDP_TCK	9 12
	XDP_TRST_L	CPU_50S	CPU_ITP	XDP_TRST_L	9 12
	XDP_BPM_L	CPU_50S	CPU_ITP	XDP_BPM_L<4..0>	9 12
	XDP_BPM_L5	CPU_50S	CPU_ITP	XDP_BPM_L<5>	9 12
	(FSB_CPURST_L)	CPU_50S	CPU_ITP	XDP_CPURST_L	12
		CPU_50S	CPU_8MIL	CPU_VID<6..0>	10 61
		CPU_50S	CPU_8MIL	IMVP6_VID<6..0>	
	CPU_VCCSENSE	CPU_27P4S	CPU_VCCSENSE	CPU_VCCSENSE_P	10 61
	CPU_VCCSENSE	CPU_27P4S	CPU_VCCSENSE	CPU_VCCSENSE_N	10 61
	(CPU_VCCSENSE)	CPU_27P4S	CPU_VCCSENSE	IMVP6_VSEN_P	
	(CPU_VCCSENSE)	CPU_27P4S	CPU_VCCSENSE	IMVP6_VSEN_N	

SYNC_MASTER=T27_MLB SYNC_DATE=08/03/2009

PAGE TITLE
CPU/FSB Constraints

Apple Inc.

DRAWING NUMBER 051-8563 SIZE D
REVISION A.13.0
BRANCH
PAGE 100 OF 109
SHEET 72 OF 80

NOTICE OF PROPRIETARY PROPERTY:
THE INFORMATION CONTAINED HEREIN IS THE PROPRIETARY PROPERTY OF APPLE COMPUTER, INC.
THE POSESSOR AGREES TO THE FOLLOWING:
I TO MAINTAIN THIS DOCUMENT IN CONFIDENCE
II NOT TO REPRODUCE OR COPY IT
III NOT TO REVEAL OR PUBLISH IT IN WHOLE OR PART
IV ALL RIGHTS RESERVED

www.vinafix.vn

http://24hconnghe.org

Memory Bus Constraints

PHYSICAL_RULE_SET	LAYER	ALLOW ROUTE ON LAYER?	MINIMUM LINE WIDTH	MINIMUM NECK WIDTH	MAXIMUM NECK LENGTH	DIFFPAIR PRIMARY GAP	DIFFPAIR NECK GAP
MEM_40S	*	=40_OHM_SE	=40_OHM_SE	=40_OHM_SE	=40_OHM_SE	=STANDARD	=STANDARD
MEM_70D	*	=70_OHM_DIFF	=70_OHM_DIFF	=70_OHM_DIFF	=70_OHM_DIFF	=70_OHM_DIFF	=70_OHM_DIFF

SPACING_RULE_SET	LAYER	LINE-TO-LINE SPACING	WEIGHT	
MEM_CLK2MEM	*	=4:1_SPACING	?	NV DG says 3x inner, 4x outer
MEM_CTRL2CTRL	*	=2:1_SPACING	?	NV DG says 2x inner, 4x outer
MEM_CTRL2MEM	*	=2.5:1_SPACING	?	NV DG says 2x inner, 4x outer
MEM_CMD2CMD	*	=1.5:1_SPACING	?	NV DG says 2x inner, 4x outer
MEM_CMD2MEM	*	=3:1_SPACING	?	NV DG says 2x inner, 4x outer
MEM_DATA2DATA	*	=1.5:1_SPACING	?	NV DG says 2x inner, 4x outer
MEM_DATA2MEM	*	=3:1_SPACING	?	NV DG says 2x inner, 4x outer
MEM_DQS2MEM	*	=3:1_SPACING	?	NV DG says 4x inner, 5x outer
MEM_2OTHER	*	25 MIL	?	

Memory Bus Spacing Group Assignments

NET_SPACING_TYPE1	NET_SPACING_TYPE2	AREA_TYPE	SPACING_RULE_SET
MEM_CLK	MEM_CLK	*	MEM_CLK2MEM
MEM_CLK	MEM_CTRL	*	MEM_CLK2MEM
MEM_CLK	MEM_CMD	*	MEM_CLK2MEM
MEM_CLK	MEM_DATA	*	MEM_CLK2MEM
MEM_CLK	MEM_DQS	*	MEM_CLK2MEM

NET_SPACING_TYPE1	NET_SPACING_TYPE2	AREA_TYPE	SPACING_RULE_SET
MEM_CMD	MEM_CLK	*	MEM_CMD2MEM
MEM_CMD	MEM_CTRL	*	MEM_CMD2MEM
MEM_CMD	MEM_CMD	*	MEM_CMD2CMD
MEM_CMD	MEM_DATA	*	MEM_CMD2MEM
MEM_CMD	MEM_DQS	*	MEM_CMD2MEM

NET_SPACING_TYPE1	NET_SPACING_TYPE2	AREA_TYPE	SPACING_RULE_SET
MEM_CTRL	MEM_CLK	*	MEM_CTRL2MEM
MEM_CTRL	MEM_CTRL	*	MEM_CTRL2CTRL
MEM_CTRL	MEM_CMD	*	MEM_CTRL2MEM
MEM_CTRL	MEM_DATA	*	MEM_CTRL2MEM
MEM_CTRL	MEM_DQS	*	MEM_CTRL2MEM

NET_SPACING_TYPE1	NET_SPACING_TYPE2	AREA_TYPE	SPACING_RULE_SET
MEM_DATA	MEM_CLK	*	MEM_DATA2MEM
MEM_DATA	MEM_CTRL	*	MEM_DATA2MEM
MEM_DATA	MEM_CMD	*	MEM_DATA2MEM
MEM_DATA	MEM_DATA	*	MEM_DATA2DATA
MEM_DATA	MEM_DQS	*	MEM_DATA2MEM

NET_SPACING_TYPE1	NET_SPACING_TYPE2	AREA_TYPE	SPACING_RULE_SET
MEM_DQS	MEM_CLK	*	MEM_DQS2MEM
MEM_DQS	MEM_CTRL	*	MEM_DQS2MEM
MEM_DQS	MEM_CMD	*	MEM_DQS2MEM
MEM_DQS	MEM_DATA	*	MEM_DQS2MEM
MEM_DQS	MEM_DQS	*	MEM_DQS2MEM

NET_SPACING_TYPE1	NET_SPACING_TYPE2	AREA_TYPE	SPACING_RULE_SET
MEM_CLK	*	*	MEM_2OTHER
MEM_CTRL	*	*	MEM_2OTHER
MEM_CMD	*	*	MEM_2OTHER
MEM_DATA	*	*	MEM_2OTHER
MEM_DQS	*	*	MEM_2OTHER

Need to support MEM_*-style wildcards!

DDR3:
DQ signals should be matched within 5 ps of associated DQS pair.
DQS intra-pair matching should be within 1 ps, inter-pair matching shoulw be within 360 ps
No DQS to clock matching requirement.
CLK intra-pair matching should be within 1 ps, inter-pair matching should be within 2 ps.
CMD/CTRL signals should be matched within 150 ps.
All memory signals maximum length is 1.030 ps.

SOURCE: MCP89 Interface DG (DG-04625-001_v0.9), Section 2.2.3
SOURCE: Santa Rosa Platform DG, Rev 1.0 (#21112), Section 6.2

MCP MEM COMP Signal Constraints

PHYSICAL_RULE_SET	LAYER	ALLOW ROUTE ON LAYER?	MINIMUM LINE WIDTH	MINIMUM NECK WIDTH	MAXIMUM NECK LENGTH	DIFFPAIR PRIMARY GAP	DIFFPAIR NECK GAP
MCP_MEM_COMP	*	=40_OHM_SE	=40_OHM_SE	=40_OHM_SE	=40_OHM_SE	=STANDARD	=STANDARD

SPACING_RULE_SET	LAYER	LINE-TO-LINE SPACING	WEIGHT
MCP_MEM_COMP	*	=2x_DIELECTRIC	?

SOURCE: MCP89 Interface DG (DG-04625-001_v0.9), Section 2.2.2

MEM_A/B_CKE EC SET NAME IS CHANGED ON K6, CANNOT SYNC THIS PAGE FROM T27

Memory Net Properties

ELECTRICAL_CONSTRAINT_SET	PHYSICAL	SPACING	NET_TYPE	
MEM_A_CLK	MEM_70D	MEM_CLK	MEM_A_CLK_P<5..0>	14 25
MEM_A_CLK	MEM_70D	MEM_CLK	MEM_A_CLK_N<5..0>	14 25
MEM_A_CKE	MEM_40S	MEM_CTRL	MEM_A_CKE<3..0>	14 20 25
MEM_A_CNTL	MEM_40S	MEM_CTRL	MEM_A_CS_L<3..0>	14 25
MEM_A_CNTL	MEM_40S	MEM_CTRL	MEM_A_ODT<3..0>	14 25
MEM_A_CMD	MEM_40S	MEM_CMD	MEM_A_A<15..0>	14 25
MEM_A_CMD	MEM_40S	MEM_CMD	MEM_A_BA<2..0>	14 25
MEM_A_CMD	MEM_40S	MEM_CMD	MEM_A_RAS_L	14 25
MEM_A_CMD	MEM_40S	MEM_CMD	MEM_A_CAS_L	14 25
MEM_A_CMD	MEM_40S	MEM_CMD	MEM_A_WE_L	14 25
MEM_A_DQ_BYTE0	MEM_40S	MEM_DATA	MEM_A_DQ<7..0>	14 27
MEM_A_DQ_BYTE1	MEM_40S	MEM_DATA	MEM_A_DQ<15..8>	14 27
MEM_A_DQ_BYTE2	MEM_40S	MEM_DATA	MEM_A_DQ<23..16>	14 27
MEM_A_DQ_BYTE3	MEM_40S	MEM_DATA	MEM_A_DQ<31..24>	14 27
MEM_A_DQ_BYTE4	MEM_40S	MEM_DATA	MEM_A_DQ<39..32>	14 27
MEM_A_DQ_BYTE5	MEM_40S	MEM_DATA	MEM_A_DQ<47..40>	14 27
MEM_A_DQ_BYTE6	MEM_40S	MEM_DATA	MEM_A_DQ<55..48>	14 27
MEM_A_DQ_BYTE7	MEM_40S	MEM_DATA	MEM_A_DQ<63..56>	14 27
MEM_A_DQ_BYTE0	MEM_40S	MEM_DATA	MEM_A_DM<0>	14 27
MEM_A_DQ_BYTE1	MEM_40S	MEM_DATA	MEM_A_DM<1>	14 27
MEM_A_DQ_BYTE2	MEM_40S	MEM_DATA	MEM_A_DM<2>	14 27
MEM_A_DQ_BYTE3	MEM_40S	MEM_DATA	MEM_A_DM<3>	14 27
MEM_A_DQ_BYTE4	MEM_40S	MEM_DATA	MEM_A_DM<4>	14 27
MEM_A_DQ_BYTE5	MEM_40S	MEM_DATA	MEM_A_DM<5>	14 27
MEM_A_DQ_BYTE6	MEM_40S	MEM_DATA	MEM_A_DM<6>	14 27
MEM_A_DQ_BYTE7	MEM_40S	MEM_DATA	MEM_A_DM<7>	14 27
MEM_A_DQS0	MEM_70D	MEM_DQS	MEM_A_DQS_P<0>	14 27
MEM_A_DQS0	MEM_70D	MEM_DQS	MEM_A_DQS_N<0>	14 27
MEM_A_DQS1	MEM_70D	MEM_DQS	MEM_A_DQS_P<1>	14 27
MEM_A_DQS1	MEM_70D	MEM_DQS	MEM_A_DQS_N<1>	14 27
MEM_A_DQS2	MEM_70D	MEM_DQS	MEM_A_DQS_P<2>	14 27
MEM_A_DQS2	MEM_70D	MEM_DQS	MEM_A_DQS_N<2>	14 27
MEM_A_DQS3	MEM_70D	MEM_DQS	MEM_A_DQS_P<3>	14 27
MEM_A_DQS3	MEM_70D	MEM_DQS	MEM_A_DQS_N<3>	14 27
MEM_A_DQS4	MEM_70D	MEM_DQS	MEM_A_DQS_P<4>	14 27
MEM_A_DQS4	MEM_70D	MEM_DQS	MEM_A_DQS_N<4>	14 27
MEM_A_DQS5	MEM_70D	MEM_DQS	MEM_A_DQS_P<5>	14 27
MEM_A_DQS5	MEM_70D	MEM_DQS	MEM_A_DQS_N<5>	14 27
MEM_A_DQS6	MEM_70D	MEM_DQS	MEM_A_DQS_P<6>	14 27
MEM_A_DQS6	MEM_70D	MEM_DQS	MEM_A_DQS_N<6>	14 27
MEM_A_DQS7	MEM_70D	MEM_DQS	MEM_A_DQS_P<7>	14 27
MEM_A_DQS7	MEM_70D	MEM_DQS	MEM_A_DQS_N<7>	14 27
MEM_B_CLK	MEM_70D	MEM_CLK	MEM_B_CLK_P<5..0>	14 26
MEM_B_CLK	MEM_70D	MEM_CLK	MEM_B_CLK_N<5..0>	14 26
MEM_B_CKE	MEM_40S	MEM_CTRL	MEM_B_CKE<3..0>	14 20 26
MEM_B_CNTL	MEM_40S	MEM_CTRL	MEM_B_CS_L<3..0>	14 26
MEM_B_CNTL	MEM_40S	MEM_CTRL	MEM_B_ODT<3..0>	14 26
MEM_B_CMD	MEM_40S	MEM_CMD	MEM_B_A<15..0>	14 26
MEM_B_CMD	MEM_40S	MEM_CMD	MEM_B_BA<2..0>	14 26
MEM_B_CMD	MEM_40S	MEM_CMD	MEM_B_RAS_L	14 26
MEM_B_CMD	MEM_40S	MEM_CMD	MEM_B_CAS_L	14 26
MEM_B_CMD	MEM_40S	MEM_CMD	MEM_B_WE_L	14 26
MEM_B_DQ_BYTE0	MEM_40S	MEM_DATA	MEM_B_DQ<7..0>	14 27
MEM_B_DQ_BYTE1	MEM_40S	MEM_DATA	MEM_B_DQ<15..8>	14 27
MEM_B_DQ_BYTE2	MEM_40S	MEM_DATA	MEM_B_DQ<23..16>	14 27
MEM_B_DQ_BYTE3	MEM_40S	MEM_DATA	MEM_B_DQ<31..24>	14 27
MEM_B_DQ_BYTE4	MEM_40S	MEM_DATA	MEM_B_DQ<39..32>	14 27
MEM_B_DQ_BYTE5	MEM_40S	MEM_DATA	MEM_B_DQ<47..40>	14 27
MEM_B_DQ_BYTE6	MEM_40S	MEM_DATA	MEM_B_DQ<55..48>	14 27
MEM_B_DQ_BYTE7	MEM_40S	MEM_DATA	MEM_B_DQ<63..56>	14 27
MEM_B_DQ_BYTE0	MEM_40S	MEM_DATA	MEM_B_DM<0>	14 27
MEM_B_DQ_BYTE1	MEM_40S	MEM_DATA	MEM_B_DM<1>	14 27
MEM_B_DQ_BYTE2	MEM_40S	MEM_DATA	MEM_B_DM<2>	14 27
MEM_B_DQ_BYTE3	MEM_40S	MEM_DATA	MEM_B_DM<3>	14 27
MEM_B_DQ_BYTE4	MEM_40S	MEM_DATA	MEM_B_DM<4>	14 27
MEM_B_DQ_BYTE5	MEM_40S	MEM_DATA	MEM_B_DM<5>	14 27
MEM_B_DQ_BYTE6	MEM_40S	MEM_DATA	MEM_B_DM<6>	14 27
MEM_B_DQ_BYTE7	MEM_40S	MEM_DATA	MEM_B_DM<7>	14 27
MEM_B_DQS0	MEM_70D	MEM_DQS	MEM_B_DQS_P<0>	14 27
MEM_B_DQS0	MEM_70D	MEM_DQS	MEM_B_DQS_N<0>	14 27
MEM_B_DQS1	MEM_70D	MEM_DQS	MEM_B_DQS_P<1>	14 27
MEM_B_DQS1	MEM_70D	MEM_DQS	MEM_B_DQS_N<1>	14 27
MEM_B_DQS2	MEM_70D	MEM_DQS	MEM_B_DQS_P<2>	14 27
MEM_B_DQS2	MEM_70D	MEM_DQS	MEM_B_DQS_N<2>	14 27
MEM_B_DQS3	MEM_70D	MEM_DQS	MEM_B_DQS_P<3>	14 27
MEM_B_DQS3	MEM_70D	MEM_DQS	MEM_B_DQS_N<3>	14 27
MEM_B_DQS4	MEM_70D	MEM_DQS	MEM_B_DQS_P<4>	14 27
MEM_B_DQS4	MEM_70D	MEM_DQS	MEM_B_DQS_N<4>	14 27
MEM_B_DQS5	MEM_70D	MEM_DQS	MEM_B_DQS_P<5>	14 27
MEM_B_DQS5	MEM_70D	MEM_DQS	MEM_B_DQS_N<5>	14 27
MEM_B_DQS6	MEM_70D	MEM_DQS	MEM_B_DQS_P<6>	14 27
MEM_B_DQS6	MEM_70D	MEM_DQS	MEM_B_DQS_N<6>	14 27
MEM_B_DQS7	MEM_70D	MEM_DQS	MEM_B_DQS_P<7>	14 27
MEM_B_DQS7	MEM_70D	MEM_DQS	MEM_B_DQS_N<7>	14 27
MCP_MEM_COMP	MCP_MEM_COMP	MCP_MEM_COMP	MCP_MEM_COMP_VDD	14
MCP_MEM_COMP	MCP_MEM_COMP	MCP_MEM_COMP	MCP_MEM_COMP_GND	14

SYNC_MASTER=T27_MLB SYNC_DATE=08/03/2009

PAGE TITLE
Memory Constraints

Apple Inc.

DRAWING NUMBER 051-8563 SIZE D
REVISION A.13.0
BRANCH
PAGE 101 OF 109
SHEET 73 OF 80

NOTICE OF PROPRIETARY PROPERTY:
THE INFORMATION CONTAINED HEREIN IS THE PROPRIETARY PROPERTY OF APPLE COMPUTER, INC.
THE POSESSOR AGREES TO THE FOLLOWING:
I TO MAINTAIN THIS DOCUMENT IN CONFIDENCE
II NOT TO REPRODUCE OR COPY IT
III NOT TO REVEAL OR PUBLISH IT IN WHOLE OR PART
IV ALL RIGHTS RESERVED

www.vinafix.vn

http://24hconnghe.org

PCI-Express

PHYSICAL_RULE_SET	LAYER	ALLOW ROUTE ON LAYER?	MINIMUM LINE WIDTH	MINIMUM NECK WIDTH	MAXIMUM NECK LENGTH	DIFFPAIR PRIMARY GAP	DIFFPAIR NECK GAP
PCIE_90D	*	=90_OHM_DIFF	=90_OHM_DIFF	=90_OHM_DIFF	=90_OHM_DIFF	=90_OHM_DIFF	=90_OHM_DIFF
CLK_PCIE_100D	*	=100_OHM_DIFF	=100_OHM_DIFF	=100_OHM_DIFF	=100_OHM_DIFF	=100_OHM_DIFF	=100_OHM_DIFF

SPACING_RULE_SET	LAYER	LINE-TO-LINE SPACING	WEIGHT
PCIE	*	=3X_DIELECTRIC	?
CLK_PCIE	*	20 MIL	?
MCP_PEX_COMP	*	8 MIL	?

SPACING_RULE_SET	LAYER	LINE-TO-LINE SPACING	WEIGHT
PCIE	TOP,BOTTOM	=4X_DIELECTRIC	?

SOURCE: MCP89 Interface DG (DG-04625-001_v0.9), Section 2.3

NEED PCIe Gen1/Gen2 notes!

Analog Video Signal Constraints

PHYSICAL_RULE_SET	LAYER	ALLOW ROUTE ON LAYER?	MINIMUM LINE WIDTH	MINIMUM NECK WIDTH	MAXIMUM NECK LENGTH	DIFFPAIR PRIMARY GAP	DIFFPAIR NECK GAP
CRT_50S	*	=50_OHM_SE	=50_OHM_SE	=50_OHM_SE	=50_OHM_SE	=STANDARD	=STANDARD

SPACING_RULE_SET	LAYER	LINE-TO-LINE SPACING	WEIGHT
CRT	*	20 MIL	?
CRT_2CRT	*	15 MIL	?
CRT_2CLK	*	50 MIL	?
CRT_2SWITCHER	*	250 MIL	?
CRT_SYNC	*	=4x_DIELECTRIC	?
MCP_DAC_COMP	*	=2x_DIELECTRIC	?

NET_SPACING_TYPE1	NET_SPACING_TYPE2	AREA_TYPE	SPACING_RULE_SET
CRT	CRT	*	CRT_2CRT

CRT signal single-ended impedence varies by location:
- 37.5-ohm from MCP to first termination resistor.
- 50-ohm from first to second termination resistor.
- 75-ohm from output of three-pole filter to connector (if possible).

R/G/B signals should be matched as close as possible and < 10 inches.
SOURCE: MCP89 Interface DG (DG-04625-001_v0.9), Section 2.4.1.

Digital Video Signal Constraints

PHYSICAL_RULE_SET	LAYER	ALLOW ROUTE ON LAYER?	MINIMUM LINE WIDTH	MINIMUM NECK WIDTH	MAXIMUM NECK LENGTH	DIFFPAIR PRIMARY GAP	DIFFPAIR NECK GAP
DP_90D	*	=90_OHM_DIFF	=90_OHM_DIFF	=90_OHM_DIFF	=90_OHM_DIFF	=90_OHM_DIFF	=90_OHM_DIFF
LVDS_100D	*	=100_OHM_DIFF	=100_OHM_DIFF	=100_OHM_DIFF	=100_OHM_DIFF	=100_OHM_DIFF	=100_OHM_DIFF
MCP_DV_COMP	*	Y	20 MIL	20 MIL	=STANDARD	=STANDARD	=STANDARD

SPACING_RULE_SET	LAYER	LINE-TO-LINE SPACING	WEIGHT
DISPLAYPORT	*	=3x_DIELECTRIC	?
LVDS	*	=3x_DIELECTRIC	?

SPACING_RULE_SET	LAYER	LINE-TO-LINE SPACING	WEIGHT
DISPLAYPORT	TOP,BOTTOM	=4x_DIELECTRIC	?
LVDS	TOP,BOTTOM	=4x_DIELECTRIC	?

LVDS intra-pair matching should be 5 mils. Pairs should be matched within 100 mils.
NOTE: NV DG recommends 90 ohm differential for LVDS, but cable/display assume 100 ohm.
DisplayPort/TMDS intra-pair matching should be 5 ps. Inter-pair matching should be within 100 ps.
DisplayPort AUX CH intra-pair matching should be 5 ps. No relationship to other signals.
Max trace length: LVDS 10 inches, DP 8.5 inches.
SOURCE: MCP89 Interface DG (DG-04625-001_v0.9), Section 2.4.2

SATA Interface Constraints

PHYSICAL_RULE_SET	LAYER	ALLOW ROUTE ON LAYER?	MINIMUM LINE WIDTH	MINIMUM NECK WIDTH	MAXIMUM NECK LENGTH	DIFFPAIR PRIMARY GAP	DIFFPAIR NECK GAP
SATA_90D	*	=90_OHM_DIFF	=90_OHM_DIFF	=90_OHM_DIFF	=90_OHM_DIFF	=90_OHM_DIFF	=90_OHM_DIFF

SPACING_RULE_SET	LAYER	LINE-TO-LINE SPACING	WEIGHT
SATA	*	=3x_DIELECTRIC	?
SATA_TERMP	*	8 MIL	?

SPACING_RULE_SET	LAYER	LINE-TO-LINE SPACING	WEIGHT
SATA	TOP,BOTTOM	=4x_DIELECTRIC	?

SATA intra-pair matching should be 1 ps.
Max trace length: 12 inches for SATA Gen1/Gen2, TBD for SATA Gen3.
SOURCE: MCP89 Interface DG (DG-04625-001_v0.9), Section 2.6

MCP89 Net Properties

ELECTRICAL_CONSTRAINT_SET	NET_TYPE PHYSICAL	NET_TYPE SPACING		
	PCIE_90D	PCIE	PEG_R2D_P<15..0>	
	PCIE_90D	PCIE	PEG_R2D_N<15..0>	
PEG_R2D	PCIE_90D	PCIE	PEG_R2D_C_P<15..0>	
	PCIE_90D	PCIE	PEG_R2D_C_N<15..0>	
PEG_D2R	PCIE_90D	PCIE	PEG_D2R_P<15..0>	
	PCIE_90D	PCIE	PEG_D2R_N<15..0>	
	PCIE_90D	PCIE	PEG_D2R_C_P<15..0>	
	PCIE_90D	PCIE	PEG_D2R_C_N<15..0>	
	PCIE_90D	PCIE	PCIE_AP_R2D_P	6 29
	PCIE_90D	PCIE	PCIE_AP_R2D_N	6 29
PCIE_AP_R2D	PCIE_90D	PCIE	PCIE_AP_R2D_C_P	15 29
	PCIE_90D	PCIE	PCIE_AP_R2D_C_N	15 29
PCIE_AP_D2R	PCIE_90D	PCIE	PCIE_AP_D2R_P	6 15 29
	PCIE_90D	PCIE	PCIE_AP_D2R_N	6 15 29
	PCIE_90D	PCIE	PCIE_ENET_R2D_P	31
	PCIE_90D	PCIE	PCIE_ENET_R2D_N	31
PCIE_ENET_R2D	PCIE_90D	PCIE	PCIE_ENET_R2D_C_P	15 31
	PCIE_90D	PCIE	PCIE_ENET_R2D_C_N	15 31
PCIE_ENET_D2R	PCIE_90D	PCIE	PCIE_ENET_D2R_P	15 31
	PCIE_90D	PCIE	PCIE_ENET_D2R_N	15 31
	PCIE_90D	PCIE	PCIE_ENET_D2R_C_P	31
	PCIE_90D	PCIE	PCIE_ENET_D2R_C_N	31
	PCIE_90D	PCIE	PCIE_FW_R2D_P	33
	PCIE_90D	PCIE	PCIE_FW_R2D_N	33
PCIE_FW_R2D	PCIE_90D	PCIE	PCIE_FW_R2D_C_P	15 33
	PCIE_90D	PCIE	PCIE_FW_R2D_C_N	15 33
PCIE_FW_D2R	PCIE_90D	PCIE	PCIE_FW_D2R_P	15 33
	PCIE_90D	PCIE	PCIE_FW_D2R_N	15 33
	PCIE_90D	PCIE	PCIE_FW_D2R_C_P	33
	PCIE_90D	PCIE	PCIE_FW_D2R_C_N	33
MCP_PE0_REFCLK	CLK_PCIE_100D	CLK_PCIE	PEG_CLK100M_P	8 15
	CLK_PCIE_100D	CLK_PCIE	PEG_CLK100M_N	8 15
MCP_PE1_REFCLK	CLK_PCIE_100D	CLK_PCIE	PCIE_CLK100M_AP_P	15 29
	CLK_PCIE_100D	CLK_PCIE	PCIE_CLK100M_AP_N	15 29
MCP_PE2_REFCLK	CLK_PCIE_100D	CLK_PCIE	PCIE_CLK100M_ENET_P	15 31
	CLK_PCIE_100D	CLK_PCIE	PCIE_CLK100M_ENET_N	15 31
MCP_PE3_REFCLK	CLK_PCIE_100D	CLK_PCIE	PCIE_CLK100M_FW_P	15 33
	CLK_PCIE_100D	CLK_PCIE	PCIE_CLK100M_FW_N	15 33
MCP_PEX_CLK_COMP		MCP_PEX_COMP	MCP_PEX0_TERMP	15
CRT_RED	CRT_50S	CRT	CRT_IG_R_C_PR	8
CRT_GREEN	CRT_50S	CRT	CRT_IG_G_Y_Y	8
CRT_BLUE	CRT_50S	CRT	CRT_IG_B_COMP_PB	8
CRT_SYNC	CRT_50S	CRT_SYNC	CRT_IG_HSYNC	8
CRT_SYNC	CRT_50S	CRT_SYNC	CRT_IG_VSYNC	8
MCP_DAC_RSET		MCP_DAC_COMP	MCP_TV_DAC_RSET	8
MCP_DAC_VREF		MCP_DAC_COMP	MCP_TV_DAC_VREF	8
TMDS_IG_TXC	DP_90D	DISPLAYPORT	TMDS_IG_TXC_P	
TMDS_IG_TXC	DP_90D	DISPLAYPORT	TMDS_IG_TXC_N	
TMDS_IG_TXD	DP_90D	DISPLAYPORT	TMDS_IG_TXD_P<5..0>	
TMDS_IG_TXD	DP_90D	DISPLAYPORT	TMDS_IG_TXD_N<5..0>	
DP_EXT_ML	DP_90D	DISPLAYPORT	DP_IG_ML_P<3..0>	8
DP_EXT_ML	DP_90D	DISPLAYPORT	DP_IG_ML_N<3..0>	8
DP_EXT_AUX_CH	DP_90D	DISPLAYPORT	DP_IG_AUX_CH_P	8 68
DP_EXT_AUX_CH	DP_90D	DISPLAYPORT	DP_IG_AUX_CH_N	8 68
MCP_TMDS0_RSET	MCP_DV_COMP		MCP_TMDS0_RSET	16 23
MCP_TMDS0_VPROBE			MCP_TMDS0_VPROBE	16 23
LVDS_IG_A_CLK	LVDS_100D	LVDS	LVDS_IG_A_CLK_P	8 67
LVDS_IG_A_CLK	LVDS_100D	LVDS	LVDS_IG_A_CLK_N	8 67
LVDS_IG_A_DATA	LVDS_100D	LVDS	LVDS_IG_A_DATA_P<2..0>	6 8 67
LVDS_IG_A_DATA	LVDS_100D	LVDS	LVDS_IG_A_DATA_N<2..0>	6 8 67
LVDS_IG_A_DATA3	LVDS_100D	LVDS	LVDS_IG_A_DATA_P<3>	
LVDS_IG_A_DATA3	LVDS_100D	LVDS	LVDS_IG_A_DATA_N<3>	
LVDS_IG_B_CLK	LVDS_100D	LVDS	LVDS_IG_B_CLK_P	
LVDS_IG_B_CLK	LVDS_100D	LVDS	LVDS_IG_B_CLK_N	
LVDS_IG_B_DATA	LVDS_100D	LVDS	LVDS_IG_B_DATA_P<2..0>	
LVDS_IG_B_DATA	LVDS_100D	LVDS	LVDS_IG_B_DATA_N<2..0>	
LVDS_IG_B_DATA3	LVDS_100D	LVDS	LVDS_IG_B_DATA_P<3>	
LVDS_IG_B_DATA3	LVDS_100D	LVDS	LVDS_IG_B_DATA_N<3>	
MCP_IFPAB_RSET	MCP_DV_COMP		MCP_IFPAB_RSET	16 23
MCP_IFPAB_VPROBE			MCP_IFPAB_VPROBE	16 23
SATA_HDD_R2D	SATA_90D	SATA	SATA_HDD_R2D_C_P	17 36
	SATA_90D	SATA	SATA_HDD_R2D_C_N	17 36
	SATA_90D	SATA	SATA_HDD_R2D_P	6 36
	SATA_90D	SATA	SATA_HDD_R2D_N	6 36
SATA_HDD_D2R	SATA_90D	SATA	SATA_HDD_D2R_P	17 36
	SATA_90D	SATA	SATA_HDD_D2R_N	17 36
	SATA_90D	SATA	SATA_HDD_D2R_C_P	6 36
	SATA_90D	SATA	SATA_HDD_D2R_C_N	6 36
SATA_ODD_R2D	SATA_90D	SATA	SATA_ODD_R2D_C_P	17 36
	SATA_90D	SATA	SATA_ODD_R2D_C_N	17 36
	SATA_90D	SATA	SATA_ODD_R2D_P	6 36
	SATA_90D	SATA	SATA_ODD_R2D_N	6 36
SATA_ODD_D2R	SATA_90D	SATA	SATA_ODD_D2R_P	17 36
	SATA_90D	SATA	SATA_ODD_D2R_N	17 36
	SATA_90D	SATA	SATA_ODD_D2R_C_P	36
	SATA_90D	SATA	SATA_ODD_D2R_C_N	36
MCP_SATA_TERMP		SATA_TERMP	MCP_SATA_TERMP	17

SYNC_MASTER=T27_MLB SYNC_DATE=08/03/2009

PAGE TITLE
MCP Constraints 1

Apple Inc.

DRAWING NUMBER 051-8563 SIZE D
REVISION A.13.0
BRANCH
PAGE 102 OF 109
SHEET 74 OF 80

NOTICE OF PROPRIETARY PROPERTY:
THE INFORMATION CONTAINED HEREIN IS THE PROPRIETARY PROPERTY OF APPLE COMPUTER, INC.
THE POSESSOR AGREES TO THE FOLLOWING:
I TO MAINTAIN THIS DOCUMENT IN CONFIDENCE
II NOT TO REPRODUCE OR COPY IT
III NOT TO REVEAL OR PUBLISH IT IN WHOLE OR PART
IV ALL RIGHTS RESERVED

www.vinafix.vn

http://24hconganghe.org

LPC Bus Constraints

PHYSICAL_RULE_SET	LAYER	ALLOW ROUTE ON LAYER?	MINIMUM LINE WIDTH	MINIMUM NECK WIDTH	MAXIMUM NECK LENGTH	DIFFPAIR PRIMARY GAP	DIFFPAIR NECK GAP
LPC_55S	*	=55_OHM_SE	=55_OHM_SE	=55_OHM_SE	=55_OHM_SE	=STANDARD	=STANDARD
CLK_LPC_55S	*	=55_OHM_SE	=55_OHM_SE	=55_OHM_SE	=55_OHM_SE	=STANDARD	=STANDARD

SPACING_RULE_SET	LAYER	LINE-TO-LINE SPACING	WEIGHT
LPC	*	=1.5x_DIELECTRIC	?
CLK_LPC	*	=2x_DIELECTRIC	?

SOURCE: MCP89 Interface DG (DG-04625-001_v0.9), Section 2.7

USB 2.0 Interface Constraints

PHYSICAL_RULE_SET	LAYER	ALLOW ROUTE ON LAYER?	MINIMUM LINE WIDTH	MINIMUM NECK WIDTH	MAXIMUM NECK LENGTH	DIFFPAIR PRIMARY GAP	DIFFPAIR NECK GAP
MCP_USB_RBIAS	*	=STANDARD	8 MIL	8 MIL	=STANDARD	=STANDARD	=STANDARD
USB_90D	*	=90_OHM_DIFF	=90_OHM_DIFF	=90_OHM_DIFF	=90_OHM_DIFF	=90_OHM_DIFF	=90_OHM_DIFF

SPACING_RULE_SET	LAYER	LINE-TO-LINE SPACING	WEIGHT
USB	*	=2x_DIELECTRIC	?

SPACING_RULE_SET	LAYER	LINE-TO-LINE SPACING	WEIGHT
USB	TOP,BOTTOM	=4x_DIELECTRIC	?

SOURCE: MCP89 Interface DG (DG-04625-001_v0.9), Section 2.8

SMBus Interface Constraints

PHYSICAL_RULE_SET	LAYER	ALLOW ROUTE ON LAYER?	MINIMUM LINE WIDTH	MINIMUM NECK WIDTH	MAXIMUM NECK LENGTH	DIFFPAIR PRIMARY GAP	DIFFPAIR NECK GAP
SMB_55S	*	=55_OHM_SE	=55_OHM_SE	=55_OHM_SE	=55_OHM_SE	=STANDARD	=STANDARD

SPACING_RULE_SET	LAYER	LINE-TO-LINE SPACING	WEIGHT
SMB	*	=2x_DIELECTRIC	?

SOURCE: MCP89 Interface DG (DG-04625-001_v0.9), Section 2.9

HD Audio Interface Constraints

PHYSICAL_RULE_SET	LAYER	ALLOW ROUTE ON LAYER?	MINIMUM LINE WIDTH	MINIMUM NECK WIDTH	MAXIMUM NECK LENGTH	DIFFPAIR PRIMARY GAP	DIFFPAIR NECK GAP
HDA_55S	*	=55_OHM_SE	=55_OHM_SE	=55_OHM_SE	=55_OHM_SE	=STANDARD	=STANDARD

SPACING_RULE_SET	LAYER	LINE-TO-LINE SPACING	WEIGHT
HDA	*	=2x_DIELECTRIC	?
MCP_HDA_COMP	*	8 MIL	?

SOURCE: MCP89 Interface DG (DG-04625-001_v0.9), Section 2.10

SIO Signal Constraints

PHYSICAL_RULE_SET	LAYER	ALLOW ROUTE ON LAYER?	MINIMUM LINE WIDTH	MINIMUM NECK WIDTH	MAXIMUM NECK LENGTH	DIFFPAIR PRIMARY GAP	DIFFPAIR NECK GAP
CLK_SLOW_55S	*	=55_OHM_SE	=55_OHM_SE	=55_OHM_SE	=55_OHM_SE	=STANDARD	=STANDARD

SPACING_RULE_SET	LAYER	LINE-TO-LINE SPACING	WEIGHT
CLK_SLOW	*	=1.5x_DIELECTRIC	?

SOURCE: MCP89 Interface DG (DG-04625-001_v0.9), Section 2.11

SPI Interface Constraints

PHYSICAL_RULE_SET	LAYER	ALLOW ROUTE ON LAYER?	MINIMUM LINE WIDTH	MINIMUM NECK WIDTH	MAXIMUM NECK LENGTH	DIFFPAIR PRIMARY GAP	DIFFPAIR NECK GAP
SPI_55S	*	=55_OHM_SE	=55_OHM_SE	=55_OHM_SE	=55_OHM_SE	=STANDARD	=STANDARD

SPACING_RULE_SET	LAYER	LINE-TO-LINE SPACING	WEIGHT
SPI	*	=1.5x_DIELECTRIC	?

SOURCE: MCP89 Interface DG (DG-04625-001_v0.9), Section 2.12

MCP89 Net Properties

ELECTRICAL_CONSTRAINT_SET	NET_TYPE PHYSICAL	NET_TYPE SPACING		
LPC_AD	LPC_55S	LPC	LPC AD<3..0>	18 39 41
LPC_FRAME_L	LPC_55S	LPC	LPC FRAME L	18 39 41
LPC_RESET_L	LPC_55S	LPC	LPC RESET L	18 24
MCP_LPC_CLK0	CLK_LPC_55S	CLK_LPC	LPC CLK33M SMC R	18 24
	CLK_LPC_55S	CLK_LPC	LPC CLK33M SMC	24 39
	CLK_LPC_55S	CLK_LPC	LPC CLK33M LPCPLUS	24 41
USB_EXTA	USB_90D	USB	USB EXTA P	17 37
	USB_90D	USB	USB EXTA N	17 37
	USB_90D	USB	USB EXTA MUXED P	37 79
	USB_90D	USB	USB EXTA MUXED N	37 79
USB_MINI	USB_90D	USB	USB MINI P	8 17
	USB_90D	USB	USB MINI N	8 17
USB_EXTD	USB_90D	USB	USB EXTD P	8 17
	USB_90D	USB	USB EXTD N	8 17
USB_CAMERA	USB_90D	USB	USB CAMERA P	17 29
	USB_90D	USB	USB CAMERA N	17 29
USB_BT	USB_90D	USB	USB BT P	17 29
	USB_90D	USB	USB BT N	17 29
USB_TPAD	USB_90D	USB	USB TPAD P	17 47
	USB_90D	USB	USB TPAD N	17 47
USB_IR	USB_90D	USB	USB IR P	17 38
	USB_90D	USB	USB IR N	17 38
USB_EXTB	USB_90D	USB	USB EXTB P	17 37
	USB_90D	USB	USB EXTB N	17 37
USB_T57	USB_90D	USB	USB T57 P	6 38
	USB_90D	USB	USB T57 N	6 38
USB_EXTC	USB_90D	USB	USB EXTC P	8 17
	USB_90D	USB	USB EXTC N	8 17
USB_SDCARD	USB_90D	USB	USB SDCARD P	17 30
	USB_90D	USB	USB SDCARD N	17 30
USB_WM	USB_90D	USB	USB WM P	8 17
	USB_90D	USB	USB WM N	8 17
MCP_USB_RBIAS	MCP_USB_RBIAS		MCP USB RBIAS GND	17
SMBUS_MCP_0_CLK	SMB_55S	SMB	SMBUS MCP 0 CLK	12 18 42
SMBUS_MCP_0_DATA	SMB_55S	SMB	SMBUS MCP 0 DATA	12 18 42
(SMBUS_SMC_MGMT_SCL)	SMB_55S	SMB	SMBUS MCP 1 CLK	18 42
(SMBUS_SMC_MGMT_SDA)	SMB_55S	SMB	SMBUS MCP 1 DATA	18 42
HDA_BIT_CLK	HDA_55S	HDA	HDA BIT CLK	18 51
	HDA_55S	HDA	HDA BIT CLK R	18
HDA_SYNC	HDA_55S	HDA	HDA SYNC	18 51
	HDA_55S	HDA	HDA SYNC R	18
HDA_RST_L	HDA_55S	HDA	HDA RST R L	18
	HDA_55S	HDA	HDA RST L	18 51
HDA_SDIN0	HDA_55S	HDA	HDA SDIN0	18 51
	HDA_55S	HDA	HDA SDIN CODEC	
HDA_SDOUT	HDA_55S	HDA	HDA SDOUT	18 51
	HDA_55S	HDA	HDA SDOUT R	18
MCP_HDA_PULLDN_COMP		MCP_HDA_COMP	MCP HDA PULLDN COMP	18
MCP_SUS_CLK	CLK_SLOW_55S	CLK_SLOW	PM CLK32K SUSCLK R	18 24
	CLK_SLOW_55S	CLK_SLOW	PM CLK32K SUSCLK	24 39
SPI_CLK	SPI_55S	SPI	SPI CLK R	18 41
	SPI_55S	SPI	SPI CLK	6 41
SPI_MOSI	SPI_55S	SPI	SPI MOSI R	18 41
	SPI_55S	SPI	SPI MOSI	6 41
SPI_MISO	SPI_55S	SPI	SPI MISO	6 18 41
SPI_CS0	SPI_55S	SPI	SPI CS0 R L	18 41
	SPI_55S	SPI	SPI CS0 L	6 41
	SPI_55S	SPI	SPI MLB CLK	41 50
	SPI_55S	SPI	SPI MLB MOSI	41 50
	SPI_55S	SPI	SPI MLB MISO	41 50
	SPI_55S	SPI	SPI MLB CS L	41 50
	SPI_55S	SPI	SPI ALT CLK	41
	SPI_55S	SPI	SPI ALT MOSI	41
	SPI_55S	SPI	SPI ALT MISO	41
	SPI_55S	SPI	SPI ALT CS L	41

SYNC_MASTER=T27_MLB SYNC_DATE=08/27/2009

PAGE TITLE
MCP Constraints 2

Apple Inc.

DRAWING NUMBER 051-8563 SIZE D
REVISION A.13.0
BRANCH
PAGE 103 OF 109
SHEET 75 OF 80

NOTICE OF PROPRIETARY PROPERTY:
THE INFORMATION CONTAINED HEREIN IS THE PROPRIETARY PROPERTY OF APPLE COMPUTER, INC.
THE POSESSOR AGREES TO THE FOLLOWING:
I TO MAINTAIN THIS DOCUMENT IN CONFIDENCE
II NOT TO REPRODUCE OR COPY IT
III NOT TO REVEAL OR PUBLISH IT IN WHOLE OR PART
IV ALL RIGHTS RESERVED

www.vinafix.vn

http://24hconganhe.org

MCP RGMII (Ethernet) Constraints

PHYSICAL_RULE_SET	LAYER	ALLOW ROUTE ON LAYER?	MINIMUM LINE WIDTH	MINIMUM NECK WIDTH	MAXIMUM NECK LENGTH	DIFFPAIR PRIMARY GAP	DIFFPAIR NECK GAP
MCP_MII_COMP	*	=STANDARD	7.5 MIL	7.5 MIL	=STANDARD	=STANDARD	=STANDARD
ENET_MII_55S	*	=55_OHM_SE	=55_OHM_SE	=55_OHM_SE	=55_OHM_SE	=STANDARD	=STANDARD

SPACING_RULE_SET	LAYER	LINE-TO-LINE SPACING	WEIGHT
MCP_BUF0_CLK	*	=3:1_SPACING	?
ENET_MII	*	12 MIL	?

SOURCE: MCP73 Interface DG (DG-02974-001_v01), Sections 2.7.2 & 2.7.4

88E1116R (Ethernet PHY) Constraints

PHYSICAL_RULE_SET	LAYER	ALLOW ROUTE ON LAYER?	MINIMUM LINE WIDTH	MINIMUM NECK WIDTH	MAXIMUM NECK LENGTH	DIFFPAIR PRIMARY GAP	DIFFPAIR NECK GAP
ENET_MDI_100D	*	=100_OHM_DIFF	=100_OHM_DIFF	=100_OHM_DIFF	=100_OHM_DIFF	=100_OHM_DIFF	=100_OHM_DIFF

SPACING_RULE_SET	LAYER	LINE-TO-LINE SPACING	WEIGHT
ENET_MDI	*	25 MIL	?

SOURCE: MCP73 Interface DG (DG-02974-001_v01), Section 2.7.4

SD Card Interface Constraints

PHYSICAL_RULE_SET	LAYER	ALLOW ROUTE ON LAYER?	MINIMUM LINE WIDTH	MINIMUM NECK WIDTH	MAXIMUM NECK LENGTH	DIFFPAIR PRIMARY GAP	DIFFPAIR NECK GAP
SD_55S	*	=55_OHM_SE	=55_OHM_SE	=55_OHM_SE	=55_OHM_SE	=STANDARD	=STANDARD

SPACING_RULE_SET	LAYER	LINE-TO-LINE SPACING	WEIGHT
SD_INTERFACE	*	=3X_DIELECTRIC	?

RGMII Net Properties

ELECTRICAL_CONSTRAINT_SET	NET_TYPE PHYSICAL	NET_TYPE SPACING		
MCP_MII_COMP	MCP_MII_COMP		MCP_MII_COMP_VDD	17
MCP_MII_COMP	MCP_MII_COMP		MCP_MII_COMP_GND	17
MCP_CLK25M_BUF0	ENET_MII_55S	MCP_BUF0_CLK	MCP_CLK25M_BUF0_R	
	ENET_MII_55S	MCP_BUF0_CLK	RTL8211_CLK25M_CKXTAL1	
ENET_INTR_L	ENET_MII_55S	ENET_MII	ENET_INTR_L	
ENET_MDIO	ENET_MII_55S	ENET_MII	ENET_MDIO	8 17
ENET_MDC	ENET_MII_55S	ENET_MII	ENET_MDC	
ENET_PWRDWN_L	ENET_MII_55S	ENET_MII	ENET_PWRDWN_L	
ENET_RXCLK	ENET_MII_55S	ENET_MII	ENET_CLK125M_RXCLK_R	
	ENET_MII_55S	ENET_MII	ENET_CLK125M_RXCLK	8 17
	ENET_MII_55S	ENET_MII	ENET_RXD_R<3..0>	
ENET_RXD_STRAP	ENET_MII_55S	ENET_MII	ENET_RXD<0>	8 17
ENET_RXD_STRAP	ENET_MII_55S	ENET_MII	ENET_RXD<3..1>	8 17
ENET_RXD	ENET_MII_55S	ENET_MII	ENET_RX_CTRL	8 17
ENET_TXCLK	ENET_MII_55S	ENET_MII	ENET_CLK125M_TXCLK	
ENET_TXD	ENET_MII_55S	ENET_MII	ENET_TXD<0>	
ENET_TXD	ENET_MII_55S	ENET_MII	ENET_TXD<3..1>	
ENET_TXD	ENET_MII_55S	ENET_MII	ENET_TX_CTRL	
	ENET_MII_55S	ENET_MII	ENET_RESET_L	24 31

Ethernet Net Properties

ELECTRICAL_CONSTRAINT_SET	NET_TYPE PHYSICAL	NET_TYPE SPACING		
ENET_MDI	ENET_MDI_100D	ENET_MDI	ENET_MDI_P<3..0>	31 32
	ENET_MDI_100D	ENET_MDI	ENET_MDI_N<3..0>	31 32

SD Card Net Properties

ELECTRICAL_CONSTRAINT_SET	NET_TYPE PHYSICAL	NET_TYPE SPACING		
SD_DATA	SD_55S	SD_INTERFACE	SD_D<4..0>	30
	SD_55S	SD_INTERFACE	SDCONN_DATA<4..0>	30 31
	SD_55S	SD_INTERFACE	BCM57765_CR_DATA<4>	31
SD_DATA_R	SD_55S	SD_INTERFACE	SD_D<7..5>	30
	SD_55S	SD_INTERFACE	SDCONN_DATA<7..5>	30 31
	SD_55S	SD_INTERFACE	BCM57765_CR_DATA<7..5>	31
SD_CLK	SD_55S	SD_INTERFACE	SD_CLK	30
	SD_55S	SD_INTERFACE	SD_CLK_R	30
	SD_55S	SD_INTERFACE	SDCONN_CLK	30 31
SD_CMD	SD_55S	SD_INTERFACE	SD_CMD	30
	SD_55S	SD_INTERFACE	SDCONN_CMD	30 31
	SD_55S	SD_INTERFACE	BCM57765_CR_CMD	31

NOTE: SD_D<7..5> are different to support BCM5764M/BCM57765 co-layout.

SYNC_MASTER=T27_MLB SYNC_DATE=11/23/2009

PAGE TITLE: Ethernet Constraints

Apple Inc.

DRAWING NUMBER: 051-8563 SIZE: D

REVISION: A.13.0

BRANCH:

PAGE: 104 OF 109

SHEET: 76 OF 80

NOTICE OF PROPRIETARY PROPERTY:
THE INFORMATION CONTAINED HEREIN IS THE PROPRIETARY PROPERTY OF APPLE COMPUTER, INC.
THE POSESSOR AGREES TO THE FOLLOWING:
I TO MAINTAIN THIS DOCUMENT IN CONFIDENCE
II NOT TO REPRODUCE OR COPY IT
III NOT TO REVEAL OR PUBLISH IT IN WHOLE OR PART
IV ALL RIGHTS RESERVED

www.vinafix.vn

http://24hcongnghe.org

FireWire Interface Constraints

PHYSICAL_RULE_SET	LAYER	ALLOW ROUTE ON LAYER?	MINIMUM LINE WIDTH	MINIMUM NECK WIDTH	MAXIMUM NECK LENGTH	DIFFPAIR PRIMARY GAP	DIFFPAIR NECK GAP
FW_100D	*	=100_OHM_DIFF	=100_OHM_DIFF	=100_OHM_DIFF	=100_OHM_DIFF	=100_OHM_DIFF	=100_OHM_DIFF

SPACING_RULE_SET	LAYER	LINE-TO-LINE SPACING	WEIGHT
FW_TP	*	=3:1_SPACING	?

FireWire Net Properties

ELECTRICAL_CONSTRAINT_SET	NET_TYPE: PHYSICAL	NET_TYPE: SPACING
FW_P0_TPA	FW_100D	FW_TP
FW_P0_TPA	FW_100D	FW_TP
FW_P0_TPB	FW_100D	FW_TP
FW_P0_TPB	FW_100D	FW_TP
FW_P1_TPA	FW_100D	FW_TP
FW_P1_TPA	FW_100D	FW_TP
FW_P1_TPB	FW_100D	FW_TP
FW_P1_TPB	FW_100D	FW_TP

Port 2 Not Used

FW_P0_TPA_P 33 35
FW_P0_TPA_N 33 35
FW_P0_TPB_P 33 35
FW_P0_TPB_N 33 35
FW_P1_TPA_P 33 35
FW_P1_TPA_N 33 35
FW_P1_TPB_P 33 35
FW_P1_TPB_N 33 35

CANNOT SYNC THIS PAGE FROM T27, FW CONSTRAINTS CHANGED TO 100OHM DIFF

SYNC_MASTER=T27_MLB SYNC_DATE=07/20/2009

PAGE TITLE: FireWire Constraints

Apple Inc.

DRAWING NUMBER: 051-8563 SIZE: D

REVISION: A.13.0

BRANCH:

PAGE: 105 OF 109

SHEET: 77 OF 80

NOTICE OF PROPRIETARY PROPERTY:
THE INFORMATION CONTAINED HEREIN IS THE PROPRIETARY PROPERTY OF APPLE COMPUTER, INC.
THE POSESSOR AGREES TO THE FOLLOWING:
I TO MAINTAIN THIS DOCUMENT IN CONFIDENCE
II NOT TO REPRODUCE OR COPY IT
III NOT TO REVEAL OR PUBLISH IT IN WHOLE OR PART
IV ALL RIGHTS RESERVED

www.vinafix.vn

http://24hconghghe.org

PHYSICAL_RULE_SET	LAYER	ALLOW ROUTE ON LAYER?	MINIMUM LINE WIDTH	MINIMUM NECK WIDTH	MAXIMUM NECK LENGTH	DIFFPAIR PRIMARY GAP	DIFFPAIR NECK GAP
1TO1_DIFFPAIR	*	=STANDARD	=STANDARD	=STANDARD	=STANDARD	0.1 MM	0.1 MM

SMC SMBus Net Properties

ELECTRICAL_CONSTRAINT_SET	NET_TYPE PHYSICAL	NET_TYPE SPACING		
SMBUS_SMC_A_S3_SCL	SMB_555	SMB	SMBUS_SMC_A_S3_SCL	6 42
SMBUS_SMC_A_S3_SDA	SMB_555	SMB	SMBUS_SMC_A_S3_SDA	6 42
SMBUS_SMC_B_S0_SCL	SMB_555	SMB	SMBUS_SMC_B_S0_SCL	42
SMBUS_SMC_B_S0_SDA	SMB_555	SMB	SMBUS_SMC_B_S0_SDA	42
SMBUS_SMC_0_S0_SCL	SMB_555	SMB	SMBUS_SMC_0_S0_SCL	42
SMBUS_SMC_0_S0_SDA	SMB_555	SMB	SMBUS_SMC_0_S0_SDA	42
SMBUS_SMC_BSA_SCL	SMB_555	SMB	SMBUS_SMC_BSA_SCL	6 42
SMBUS_SMC_BSA_SDA	SMB_555	SMB	SMBUS_SMC_BSA_SDA	6 42
SMBUS_SMC_MGMT_SCL	SMB_555	SMB	SMBUS_SMC_MGMT_SCL	42
SMBUS_SMC_MGMT_SDA	SMB_555	SMB	SMBUS_SMC_MGMT_SDA	42

SMBus Charger Net Properties

ELECTRICAL_CONSTRAINT_SET	NET_TYPE PHYSICAL	NET_TYPE SPACING		
CHGR_CSI	1TO1_DIFFPAIR		CHGR_CSI_P	58
	1TO1_DIFFPAIR		CHGR_CSI_N	58
	1TO1_DIFFPAIR		CHGR_CSI_R_P	58
	1TO1_DIFFPAIR		CHGR_CSI_R_N	58
CHGR_CSO	1TO1_DIFFPAIR		CHGR_CSO_P	58
	1TO1_DIFFPAIR		CHGR_CSO_N	58
	1TO1_DIFFPAIR		CHGR_CSO_R_P	44 58
	1TO1_DIFFPAIR		CHGR_CSO_R_N	44 58

SYNC_MASTER=T27_MLB SYNC_DATE=07/28/2009

PAGE TITLE
SMC Constraints

Apple Inc.

DRAWING NUMBER 051-8563 SIZE D

REVISION A.13.0

BRANCH

PAGE 106 OF 109

SHEET 78 OF 80

NOTICE OF PROPRIETARY PROPERTY:
THE INFORMATION CONTAINED HEREIN IS THE PROPRIETARY PROPERTY OF APPLE COMPUTER, INC.
THE POSESSOR AGREES TO THE FOLLOWING:
I TO MAINTAIN THIS DOCUMENT IN CONFIDENCE
II NOT TO REPRODUCE OR COPY IT
III NOT TO REVEAL OR PUBLISH IT IN WHOLE OR PART
IV ALL RIGHTS RESERVED

www.vinafix.vn

http://24hcongnghe.org

PHYSICAL_RULE_SET	LAYER	ALLOW ROUTE ON LAYER?	MINIMUM LINE WIDTH	MINIMUM NECK WIDTH	MAXIMUM NECK LENGTH	DIFFPAIR PRIMARY GAP	DIFFPAIR NECK GAP
SENSE_1TO1_55S	*	=1:1_DIFFPAIR	=55_OHM_SE	=55_OHM_SE	=55_OHM_SE	=1:1_DIFFPAIR	=1:1_DIFFPAIR
THERM_1TO1_55S	*	=1:1_DIFFPAIR	=55_OHM_SE	=55_OHM_SE	=55_OHM_SE	=1:1_DIFFPAIR	=1:1_DIFFPAIR
DIFFPAIR	*	=1:1_DIFFPAIR			=1:1_DIFFPAIR	=1:1_DIFFPAIR	=1:1_DIFFPAIR

SPACING_RULE_SET	LAYER	LINE-TO-LINE SPACING	WEIGHT
SENSE	*	=2:1_SPACING	?
THERM	*	=2:1_SPACING	?
AUDIO	*	=2:1_SPACING	?

SPACING_RULE_SET	LAYER	LINE-TO-LINE SPACING	WEIGHT
ENETCONN	*	25 MILS	?

SPACING_RULE_SET	LAYER	LINE-TO-LINE SPACING	WEIGHT
GND	*	=STANDARD	?
MEM_POWER	*	=STANDARD	?

SPACING_RULE_SET	LAYER	LINE-TO-LINE SPACING	WEIGHT
GND_P2MM	*	0.20 MM	1000
PWR_P2MM	*	0.20 MM	1000

NET_SPACING_TYPE1	NET_SPACING_TYPE2	AREA_TYPE	SPACING_RULE_SET
MEM_CLK	GND	*	GND_P2MM
MEM_CMD	GND	*	GND_P2MM
MEM_CTRL	GND	*	GND_P2MM
MEM_DATA	GND	*	GND_P2MM
MEM_DQS	GND	*	GND_P2MM

NET_SPACING_TYPE1	NET_SPACING_TYPE2	AREA_TYPE	SPACING_RULE_SET
MEM_CLK	MEM_POWER	*	PWR_P2MM
MEM_CMD	MEM_POWER	*	PWR_P2MM
MEM_CTRL	MEM_POWER	*	PWR_P2MM
MEM_DATA	MEM_POWER	*	PWR_P2MM
MEM_DQS	MEM_POWER	*	PWR_P2MM

NET_SPACING_TYPE1	NET_SPACING_TYPE2	AREA_TYPE	SPACING_RULE_SET
CLK_PCIE	GND	*	GND_P2MM
PCIE	GND	*	GND_P2MM
SATA	GND	*	GND_P2MM
USB	GND	*	GND_P2MM
CLK_PCIE	SB_POWER	*	PWR_P2MM
SATA	SB_POWER	*	PWR_P2MM
USB	SB_POWER	*	PWR_P2MM

NET_SPACING_TYPE1	NET_SPACING_TYPE2	AREA_TYPE	SPACING_RULE_SET
CLK_FSB	GND	*	GND_P2MM
CPU_COMP	GND	*	GND_P2MM
CPU_GTLREF	GND	*	GND_P2MM
CPU_VCCSENSE	GND	*	GND_P2MM

NET_SPACING_TYPE1	NET_SPACING_TYPE2	AREA_TYPE	SPACING_RULE_SET
LVDS	GND	*	GND_P2MM

NET_SPACING_TYPE1	NET_SPACING_TYPE2	AREA_TYPE	SPACING_RULE_SET
ENET_MDI	GND	*	GND_P2MM

MCP Fanout Constraint Relaxations

PHYSICAL_RULE_SET	LAYER	ALLOW ROUTE ON LAYER?	MINIMUM LINE WIDTH	MINIMUM NECK WIDTH	MAXIMUM NECK LENGTH	DIFFPAIR PRIMARY GAP	DIFFPAIR NECK GAP
MEM_40S OVERRIDE	* OVERRIDE	OVERRIDE	OVERRIDE	0.09 MM OVERRIDE	5.8 MM OVERRIDE	OVERRIDE	OVERRIDE
MCP_DV_COMP OVERRIDE	TOP OVERRIDE	OVERRIDE	OVERRIDE	0.1 MM OVERRIDE	500 MIL OVERRIDE	OVERRIDE	OVERRIDE
MCP_MEM_COMP OVERRIDE	TOP OVERRIDE	OVERRIDE	OVERRIDE	0.1 MM OVERRIDE	500 MIL OVERRIDE	OVERRIDE	OVERRIDE
MCP_MII_COMP OVERRIDE	TOP OVERRIDE	OVERRIDE	OVERRIDE	0.1 MM OVERRIDE	500 MIL OVERRIDE	OVERRIDE	OVERRIDE
MCP_USB_RBIAS OVERRIDE	TOP OVERRIDE	OVERRIDE	OVERRIDE	0.1 MM OVERRIDE	500 MIL OVERRIDE	OVERRIDE	OVERRIDE
MCP_DV_COMP OVERRIDE	* OVERRIDE	OVERRIDE	OVERRIDE	0.25 MM OVERRIDE	250 MIL OVERRIDE	OVERRIDE	OVERRIDE

Misc Net Properties

ELECTRICAL_CONSTRAINT_SET	NET_TYPE PHYSICAL	NET_TYPE SPACING		
(PCIE_AP)	CLK_PCIE_100D	CLK_PCIE	PCIE_CLK100M_AP_CONN_P	6 29
	CLK_PCIE_100D	CLK_PCIE	PCIE_CLK100M_AP_CONN_N	6 29
(USB_EXTA)	USB_90D	USB	USB_EXTA_MUXED_P	37 75
(USB_EXTA)	USB_90D	USB	USB_EXTA_MUXED_N	37 75
(USB_EXTA)	USB_90D	USB	USB_LT1_P	37
(USB_EXTA)	USB_90D	USB	USB_LT1_N	37
(USB_TPAD)	USB_90D	USB	USB_TPAD_R_P	47
(USB_TPAD)	USB_90D	USB	USB_TPAD_R_N	47
(USB_CAMERA)	USB_90D	USB	USB_CAMERA_CONN_P	6 29
(USB_CAMERA)	USB_90D	USB	USB_CAMERA_CONN_N	6 29
	USB_90D	USB	USB_BT_CONN_P	6 29
	USB_90D	USB	USB_BT_CONN_N	6 29
	USB_90D	USB	USB_LT2_P	37
	USB_90D	USB	USB_LT2_N	37
	ENET_MDI_100D	ENETCONN	ENETCONN_P<3..0>	32
	ENET_MDI_100D	ENETCONN	ENETCONN_N<3..0>	32
	SATA_90D	SATA	SATA_ODD_R2D_UF_P	36
	SATA_90D	SATA	SATA_ODD_R2D_UF_N	36
	SATA_90D	SATA	SATA_ODD_D2R_UF_P	6 36
	SATA_90D	SATA	SATA_ODD_D2R_UF_N	6 36
	SATA_90D	SATA	SATA_HDD_D2R_UF_P	36
	SATA_90D	SATA	SATA_HDD_D2R_UF_N	36
	SATA_90D	SATA	SATA_HDD_R2D_UF_P	36
	SATA_90D	SATA	SATA_HDD_R2D_UF_N	36
	SATA_90D	SATA	SATA_HDD_D2R_RDRV_IN_P	36
	SATA_90D	SATA	SATA_HDD_D2R_RDRV_IN_N	36
	SATA_90D	SATA	SATA_HDD_R2D_RDRV_IN_P	36
	SATA_90D	SATA	SATA_HDD_R2D_RDRV_IN_N	36
	SATA_90D	SATA	SATA_HDD_D2R_RDRV_OUT_P	36
	SATA_90D	SATA	SATA_HDD_D2R_RDRV_OUT_N	36
	SATA_90D	SATA	SATA_HDD_R2D_RDRV_OUT_P	36
	SATA_90D	SATA	SATA_HDD_R2D_RDRV_OUT_N	36
	SATA_90D	SATA	SATA_HDD_D2R_NORDRV_P	36
	SATA_90D	SATA	SATA_HDD_D2R_NORDRV_N	36
	SATA_90D	SATA	SATA_HDD_R2D_NORDRV_P	36
	SATA_90D	SATA	SATA_HDD_R2D_NORDRV_N	36

Graphics Net Properties

ELECTRICAL_CONSTRAINT_SET	NET_TYPE PHYSICAL	NET_TYPE SPACING		
	LVDS_100D	LVDS	LVDS_CONN_A_CLK_P	
	LVDS_100D	LVDS	LVDS_CONN_A_CLK_N	
	LVDS_100D	LVDS	LVDS_CONN_A_CLK_F_P	6 67
	LVDS_100D	LVDS	LVDS_CONN_A_CLK_F_N	6 67
	LVDS_100D	LVDS	LVDS_CONN_A_DATA_P<2..0>	
	LVDS_100D	LVDS	LVDS_CONN_A_DATA_N<2..0>	
	LVDS_100D	LVDS	LVDS_CONN_B_CLK_P	
	LVDS_100D	LVDS	LVDS_CONN_B_CLK_N	
	LVDS_100D	LVDS	LVDS_CONN_B_CLK_F_P	
	LVDS_100D	LVDS	LVDS_CONN_B_CLK_F_N	
	LVDS_100D	LVDS	LVDS_CONN_B_DATA_P<2..0>	
	LVDS_100D	LVDS	LVDS_CONN_B_DATA_N<2..0>	
(DP_EXT_ML)	DP_90D	DISPLAYPORT	DP_EXT_ML_P<3..0>	8 69
	DP_90D	DISPLAYPORT	DP_EXT_ML_N<3..0>	8 69
	DP_90D	DISPLAYPORT	DP_EXT_ML_C_P<3..0>	69
	DP_90D	DISPLAYPORT	DP_EXT_ML_C_N<3..0>	69
	DP_90D	DISPLAYPORT	DP_EXT_ML_F_P<3..0>	69
	DP_90D	DISPLAYPORT	DP_EXT_ML_F_N<3..0>	69
(DP_EXT_AUX_CH)	DP_90D	DISPLAYPORT	DP_EXT_AUX_CH_C_P	8 69
	DP_90D	DISPLAYPORT	DP_EXT_AUX_CH_C_N	8 69
	DP_90D	DISPLAYPORT	DP_AUX_CH_SW_P	
	DP_90D	DISPLAYPORT	DP_AUX_CH_SW_N	

Power Net Properties

ELECTRICAL_CONSTRAINT_SET	NET_TYPE PHYSICAL	NET_TYPE SPACING		
CPUTHMSNS_D2	THERM_1TO1_55S	THERM	CPUTHMSNS_D2_P	45
	THERM_1TO1_55S	THERM	CPUTHMSNS_D2_N	45
CPU_THERMD	THERM_1TO1_55S	THERM	CPU_THERMD_P	9 45
	THERM_1TO1_55S	THERM	CPU_THERMD_N	9 45
MCPTHMSNS_D2	THERM_1TO1_55S	THERM	MCPTHMSNS_D2_P	
	THERM_1TO1_55S	THERM	MCPTHMSNS_D2_N	
MCP_THMDIODE	THERM_1TO1_55S	THERM	MCP_THMDIODE_P	18 45
	THERM_1TO1_55S	THERM	MCP_THMDIODE_N	18 45
SENSE_DIFFPAIR	SENSE_1TO1_55S	SENSE	ISNS_1V5_S3_P	
	SENSE_1TO1_55S	SENSE	ISNS_1V5_S3_N	
	SENSE_1TO1_55S	SENSE	ISNS_1V5_S3_R_P	
	SENSE_1TO1_55S	SENSE	ISNS_1V5_S3_R_N	
SENSE_DIFFPAIR	SENSE_1TO1_55S	SENSE	ISNS_AIRPORT_P	
	SENSE_1TO1_55S	SENSE	ISNS_AIRPORT_N	
	SENSE_1TO1_55S	SENSE	ISNS_AIRPORT_R_P	
	SENSE_1TO1_55S	SENSE	ISNS_AIRPORT_R_N	
SENSE_DIFFPAIR	SENSE_1TO1_55S	SENSE	ISNS_HDD_P	
	SENSE_1TO1_55S	SENSE	ISNS_HDD_N	
	SENSE_1TO1_55S	SENSE	ISNS_HDD_R_P	
	SENSE_1TO1_55S	SENSE	ISNS_HDD_R_N	
SENSE_DIFFPAIR	SENSE_1TO1_55S	SENSE	ISNS_LCDBKLT_P	
	SENSE_1TO1_55S	SENSE	ISNS_LCDBKLT_N	
	SENSE_1TO1_55S	SENSE	ISNS_LCDBKLT_R_P	
	SENSE_1TO1_55S	SENSE	ISNS_LCDBKLT_R_N	
SENSE_DIFFPAIR	SENSE_1TO1_55S	SENSE	ISNS_ODD_P	
	SENSE_1TO1_55S	SENSE	ISNS_ODD_N	
	SENSE_1TO1_55S	SENSE	ISNS_ODD_R_P	
	SENSE_1TO1_55S	SENSE	ISNS_ODD_R_N	
SENSE_DIFFPAIR	SENSE_1TO1_55S	SENSE	ISNS_CPUVTT_P	44
	SENSE_1TO1_55S	SENSE	ISNS_CPUVTT_N	44
SENSE_DIFFPAIR	SENSE_1TO1_55S	SENSE	MCPCORES0_VSEN_P	21 62
	SENSE_1TO1_55S	SENSE	MCPCORES0_VSEN_N	21 62
PZ77		MEM_POWER	PP1V5R1V35_S3	6 7
		SB_POWER	PP3V3_S5	6 7 65
		SB_POWER	PP3V3_S0	6 7 65
		SB_POWER	PP1V5_S0	6 7 65
		GND	GND	

Audio Net Properties

ELECTRICAL_CONSTRAINT_SET	NET_TYPE PHYSICAL	NET_TYPE SPACING	
	DIFFPAIR	AUDIO	AUD_SPKRAMP_LIN_P
	DIFFPAIR	AUDIO	AUD_SPKRAMP_LIN_N
	DIFFPAIR	AUDIO	AUD_SPKRAMP_SUBIN_P
	DIFFPAIR	AUDIO	AUD_SPKRAMP_SUBIN_N
	DIFFPAIR	AUDIO	AUD_SPKRAMP_RIN_P
	DIFFPAIR	AUDIO	AUD_SPKRAMP_RIN_N
	DIFFPAIR	AUDIO	SSM2315L_P
	DIFFPAIR	AUDIO	SSM2315L_N
	DIFFPAIR	AUDIO	SSM2315S_P
	DIFFPAIR	AUDIO	SSM2315S_N
	DIFFPAIR	AUDIO	SSM2315R_P
	DIFFPAIR	AUDIO	SSM2315R_N
SPK_OUT	DIFFPAIR	AUDIO	SPKRCONN_L_OUT_P
	DIFFPAIR	AUDIO	SPKRCONN_L_OUT_N
SPK_OUT	DIFFPAIR	AUDIO	SPKRCONN_S_OUT_P
	DIFFPAIR	AUDIO	SPKRCONN_S_OUT_N
SPK_OUT	DIFFPAIR	AUDIO	SPKRCONN_R_OUT_P
	DIFFPAIR	AUDIO	SPKRCONN_R_OUT_N
	DIFFPAIR	AUDIO	BI_MIC_P
	DIFFPAIR	AUDIO	BI_MIC_N
	DIFFPAIR	AUDIO	HS_MIC_P
	DIFFPAIR	AUDIO	HS_MIC_N

SYNC_MASTER=T27_MLB SYNC_DATE=09/08/2009

PAGE TITLE
K6/K69 Specific Constraints

Apple Inc.

DRAWING NUMBER 051-8563 SIZE D

REVISION A.13.0

BRANCH

PAGE 108 OF 109

SHEET 79 OF 80

NOTICE OF PROPRIETARY PROPERTY:
THE INFORMATION CONTAINED HEREIN IS THE PROPRIETARY PROPERTY OF APPLE COMPUTER, INC.
THE POSESSOR AGREES TO THE FOLLOWING:
I TO MAINTAIN THIS DOCUMENT IN CONFIDENCE
II NOT TO REPRODUCE OR COPY IT
III NOT TO REVEAL OR PUBLISH IT IN WHOLE OR PART
IV ALL RIGHTS RESERVED

www.vinafix.vn

http://24hcongnghe.org

K6/K69 Board-Specific Physical & Spacing Constraints

BOARD LAYERS	BOARD AREAS	BOARD UNITS (MIL or MM)	ALLEGRO VERSION
TOP,ISL2,ISL3,ISL4,ISL5,ISL6,ISL7,ISL8,ISL9,ISL10,ISL11,BOTTOM	NO_TYPE,BGA	MM	15.2

PHYSICAL_RULE_SET	LAYER	ALLOW ROUTE ON LAYER?	MINIMUM LINE WIDTH	MINIMUM NECK WIDTH	MAXIMUM NECK LENGTH	DIFFPAIR PRIMARY GAP	DIFFPAIR NECK GAP
DEFAULT	*	Y	=50_OHM_SE	0.080 MM	12.7 MM	0 MM	0 MM
STANDARD	*	Y	=DEFAULT	=DEFAULT	12.7 MM	=DEFAULT	=DEFAULT

PHYSICAL_RULE_SET	LAYER	ALLOW ROUTE ON LAYER?	MINIMUM LINE WIDTH	MINIMUM NECK WIDTH	MAXIMUM NECK LENGTH	DIFFPAIR PRIMARY GAP	DIFFPAIR NECK GAP
55_OHM_SE	TOP,BOTTOM	Y	0.090 MM	0.090 MM			
55_OHM_SE	*	Y	0.076 MM	0.076 MM	=STANDARD	=STANDARD	=STANDARD

PHYSICAL_RULE_SET	LAYER	ALLOW ROUTE ON LAYER?	MINIMUM LINE WIDTH	MINIMUM NECK WIDTH	MAXIMUM NECK LENGTH	DIFFPAIR PRIMARY GAP	DIFFPAIR NECK GAP
50_OHM_SE	TOP,BOTTOM	Y	0.115 MM	0.115 MM			
50_OHM_SE	*	Y	0.076 MM	0.076 MM	=STANDARD	=STANDARD	=STANDARD

PHYSICAL_RULE_SET	LAYER	ALLOW ROUTE ON LAYER?	MINIMUM LINE WIDTH	MINIMUM NECK WIDTH	MAXIMUM NECK LENGTH	DIFFPAIR PRIMARY GAP	DIFFPAIR NECK GAP
40_OHM_SE	TOP,BOTTOM	Y	0.165 MM	0.100 MM			
40_OHM_SE	*	Y	0.126 MM	0.100 MM	=STANDARD	=STANDARD	=STANDARD

PHYSICAL_RULE_SET	LAYER	ALLOW ROUTE ON LAYER?	MINIMUM LINE WIDTH	MINIMUM NECK WIDTH	MAXIMUM NECK LENGTH	DIFFPAIR PRIMARY GAP	DIFFPAIR NECK GAP
27P4_OHM_SE	TOP,BOTTOM	Y	0.310 MM	0.310 MM			
27P4_OHM_SE	*	Y	0.222 MM	0.222 MM	=STANDARD	=STANDARD	=STANDARD

PHYSICAL_RULE_SET	LAYER	ALLOW ROUTE ON LAYER?	MINIMUM LINE WIDTH	MINIMUM NECK WIDTH	MAXIMUM NECK LENGTH	DIFFPAIR PRIMARY GAP	DIFFPAIR NECK GAP
70_OHM_DIFF	*	N	=STANDARD	=STANDARD	=STANDARD	=STANDARD	=STANDARD
70_OHM_DIFF	ISL3,ISL4,ISL9,ISL10	Y	0.151 MM	0.109 MM	=STANDARD	0.224 MM	0.090 MM
70_OHM_DIFF	TOP,BOTTOM	Y	0.185 MM	0.185 MM		0.200 MM	0.200 MM

PHYSICAL_RULE_SET	LAYER	ALLOW ROUTE ON LAYER?	MINIMUM LINE WIDTH	MINIMUM NECK WIDTH	MAXIMUM NECK LENGTH	DIFFPAIR PRIMARY GAP	DIFFPAIR NECK GAP
90_OHM_DIFF	*	N	=STANDARD	=STANDARD	=STANDARD	=STANDARD	=STANDARD
90_OHM_DIFF	ISL3,ISL4,ISL9,ISL10	Y	0.095 MM	0.095 MM		0.234 MM	0.234 MM
90_OHM_DIFF	TOP,BOTTOM	Y	0.112 MM	0.112 MM		0.220 MM	0.220 MM

PHYSICAL_RULE_SET	LAYER	ALLOW ROUTE ON LAYER?	MINIMUM LINE WIDTH	MINIMUM NECK WIDTH	MAXIMUM NECK LENGTH	DIFFPAIR PRIMARY GAP	DIFFPAIR NECK GAP
100_OHM_DIFF	*	N	=STANDARD	=STANDARD	=STANDARD	=STANDARD	=STANDARD
100_OHM_DIFF	ISL3,ISL4,ISL9,ISL10	Y	0.075 MM	0.075 MM		0.244 MM	0.244 MM
100_OHM_DIFF	TOP,BOTTOM	Y	0.091 MM	0.091 MM		0.230 MM	0.230 MM

PHYSICAL_RULE_SET	LAYER	ALLOW ROUTE ON LAYER?	MINIMUM LINE WIDTH	MINIMUM NECK WIDTH	MAXIMUM NECK LENGTH	DIFFPAIR PRIMARY GAP	DIFFPAIR NECK GAP
110_OHM_DIFF	*	N	=STANDARD	=STANDARD	=STANDARD	=STANDARD	=STANDARD
110_OHM_DIFF	ISL3,ISL4,ISL9,ISL10	Y	0.075 MM	0.075 MM		0.330 MM	0.330 MM
110_OHM_DIFF	TOP,BOTTOM	Y	0.077 MM	0.077 MM		0.330 MM	0.330 MM

PHYSICAL_RULE_SET	LAYER	ALLOW ROUTE ON LAYER?	MINIMUM LINE WIDTH	MINIMUM NECK WIDTH	MAXIMUM NECK LENGTH	DIFFPAIR PRIMARY GAP	DIFFPAIR NECK GAP
1:1_DIFFPAIR	*	Y	=STANDARD	=STANDARD	=STANDARD	0.1 MM	0.1 MM

SPACING_RULE_SET	LAYER	LINE-TO-LINE SPACING	WEIGHT
DEFAULT	*	0.1 MM	?
STANDARD	*	=DEFAULT	?
BGA_P1MM	*	0.1 MM	?
BGA_P2MM	*	0.2 MM	?
BGA_P3MM	*	0.3 MM	?

SPACING_RULE_SET	LAYER	LINE-TO-LINE SPACING	WEIGHT
1.5:1_SPACING	*	0.15 MM	?
2:1_SPACING	*	0.2 MM	?
2.5:1_SPACING	*	0.25 MM	?
3:1_SPACING	*	0.3 MM	?
4:1_SPACING	*	0.4 MM	?

SPACING_RULE_SET	LAYER	LINE-TO-LINE SPACING	WEIGHT
1.5X_DIELECTRIC	TOP,BOTTOM	0.105 MM	?
2X_DIELECTRIC	TOP,BOTTOM	0.140 MM	?
3X_DIELECTRIC	TOP,BOTTOM	0.210 MM	?
4X_DIELECTRIC	TOP,BOTTOM	0.280 MM	?
5X_DIELECTRIC	TOP,BOTTOM	0.350 MM	?
1.5X_DIELECTRIC	*	0.095 MM	?
2X_DIELECTRIC	*	0.126 MM	?
3X_DIELECTRIC	*	0.189 MM	?
4X_DIELECTRIC	*	0.252 MM	?
5X_DIELECTRIC	*	0.315 MM	?

NET_SPACING_TYPE1	NET_SPACING_TYPE2	AREA_TYPE	SPACING_RULE_SET
*	*	BGA	BGA_P1MM
MEM_CLK	*	BGA	BGA_P2MM
CLK_FSB	*	BGA	BGA_P2MM
CLK_LPC	*	BGA	BGA_P2MM
CLK_PCIE	*	BGA	BGA_P2MM
CLK_SLOW	*	BGA	BGA_P2MM
FSB_DSTB	FSB_DSTB	BGA	BGA_P3MM

NET_PHYSICAL_TYPE	AREA_TYPE	PHYSICAL_RULE_SET
MEM_40S	BGA	STANDARD

SYNC MASTER=T27_MLB SYNC DATE=08/06/2009

PAGE TITLE
K6/K69 PCB Rule Definitions

Apple Inc.

DRAWING NUMBER 051-8563 SIZE D

REVISION A.13.0

BRANCH

PAGE 109 OF 109

SHEET 80 OF 80

NOTICE OF PROPRIETARY PROPERTY:
THE INFORMATION CONTAINED HEREIN IS THE PROPRIETARY PROPERTY OF APPLE COMPUTER, INC.
THE POSESSOR AGREES TO THE FOLLOWING:
I TO MAINTAIN THIS DOCUMENT IN CONFIDENCE
II NOT TO REPRODUCE OR COPY IT
III NOT TO REVEAL OR PUBLISH IT IN WHOLE OR PART
IV ALL RIGHTS RESERVED

www.vinafix.vn