1. ALL RESISTANCE VALUES ARE IN OHMS, 0.1 WATT +/- 5%.
2. ALL CAPACITANCE VALUES ARE IN MICROFARADS.
3. ALL CRYSTALS & OSCILLATOR VALUES ARE IN HERTZ.

REV	ECN	DESCRIPTION OF REVISION	CK APPD / DATE
8	0006532879	ENGINEERING RELEASED	2016-07-06

D11 MLB - PVT

LAST_MODIFICATION=Wed Jul 6 08:55:26 2016

PAGE	<CSA>	CONTENTS	SYNC	DATE
1	1	TABLE OF CONTENTS	<SYNC_MASTER1>	<SYNC_DATE1>
2	2	SYSTEM:BOM TABLES	<SYNC_MASTER2>	<SYNC_DATE2>
3	3	SYSTEM:EEEE CALLOUTS	<SYNC_MASTER3>	<SYNC_DATE3>
4	4	SYSTEM:MECHANICAL COMPONENTS	<SYNC_MASTER4>	<SYNC_DATE4>
5	5	SYSTEM: BOARDID	<SYNC_MASTER5>	<SYNC_DATE5>
6	6	spare		
7	7	SOC:JTAG,USB,XTAL		
8	8	SOC:PCIE		
9	9	SOC:MIPI AND ISP		
10	10	SOC:LPDP		
11	11	SOC:SERIAL		
12	12	SOC:GPIO & UART		
13	13	SOC:AOP		
14	14	SOC:POWER (1/3)		
15	15	SOC:POWER (2/3)		
16	16	SOC:POWER (3/3)		
17	17	NAND		
18	18	SYSTEM POWER:PMU (1/3)		
19	19	SYSTEM POWER:PMU (2/3)		
20	20	SYSTEM POWER:PMU (3/3)		
21	21	SYSTEM POWER:CHARGER		
22	22	SYSTEM POWER:BATTERY CONN		
23	23	SYSTEM POWER:BOOST		
24	24	SENSORS		
25	25	B2B FILTERS: UTAH		
26	26	CAMERA:STROBE DRIVER		
27	27	Accessory: Buck Circuit		<SYNC_DATE27>
28	28	TRINITY:FF SPECIFIC		
29	29	B2B:FOREHEAD		
30	30	B2B:NEVADA		<SYNC_DATE30>
31	31	AUDIO:CALTRA CODEC (1/2)		
32	32	AUDIO:CALTRA CODEC (2/2)		
33	33	AUDIO:SPEAKER AMP 2		
34	34	AUDIO:SPEAKER AMP 1		
35	35	ARC:DRIVER		
36	36	ARC:MAGGIE		
37	37	DISPLAY & MESA:POWER		
38	38	B2B:ORB & MESA		
39	39	B2B FILTERS: DISPLAY & TOUCH		
40	40	TRISTAR 2		
41	41	B2B:DOCK FLEX		
42	42	spare		
43	43	spare		
44	44	B2B FILTERS: RIGHT BUTTON FLEX		
45	45	B2B FF SPECIFIC		
46	46	LARGE FORM FACTOR SPECIFIC		<SYNC_DATE46>
47	47	I2C MAP: AP, TOUCH, HOMER, I2C5		
48	48	I2C MAP AOP	<SYNC_MASTER48>	<SYNC_DATE48>
49	49	I2C TABLE	<SYNC_MASTER49>	<SYNC_DATE49>
50	50	spare	<SYNC_MASTER50>	<SYNC_DATE50>
51	51	spare	<SYNC_MASTER51>	<SYNC_DATE51>
52	52	MLB UNIQUE	<SYNC_MASTER52>	<SYNC_DATE52>
53	53	CELL,WIFI,NFC	<SYNC_MASTER53>	<SYNC_DATE53>
54	54	page1		
55	55	NFC		
56	56	page1		
57	57	METROCIRC [2]		
58	58	UAT MATCH AND TUNER [3]		
59	59	WIFI_MLB SCHEMATIC		
60	60	PERENNIAL		
61	61	WIFI FRONT-END [77]		
62	62	page1		
63	63	BOM_OMIT_TABLE		
64	64	PMU: CONTROL AND CLOCKS		
65	65	PMU: SWITCHERS AND LDOS		
66	66	BASEBAND: POWER2		
67	67	BASEBAND: CONTROL		
68	68	BASEBAND GPIOS		
69	69	TRANSCEIVER0/1: POWER		
70	70	TRANSCEIVER0/1: TX PORTS		
71	71	TRANSCEIVER0/1: PRX PORTS	<SYNC_MASTER71>	<SYNC_DATE71>
72	72	RECEIVE MATCHING	<SYNC_MASTER72>	<SYNC_DATE72>
73	73	LOWER ANTENNA & COUPLERS	<SYNC_MASTER73>	<SYNC_DATE73>
74	74	DIVERSITY RECEIVE ASM'S	<SYNC_MASTER74>	<SYNC_DATE74>
75	75	DIVERSITY RECEIVE LNA'S	d	
76	76	UPPER ANTENNA FEEDS		
77	77	PMU: ET MODULATOR		
78	<CSA_PAGE78>	TEST POINTS & BOOT CONFIG	<SYNC_MASTER78>	<SYNC_DATE78>
79	<CSA_PAGE79>	TDD TRANSMIT	<SYNC_MASTER79>	<SYNC_DATE79>
80	<CSA_PAGE80>	FDD TRANSMIT	<SYNC_MASTER80>	<SYNC_DATE80>
81	<CSA_PAGE81>	ICEFALL, SIM, DEBUG_CONN	<SYNC_MASTER81>	<SYNC_DATE81>
	<CSA_PAGE82>		<SYNC_MASTER82>	<SYNC_DATE82>
	<CSA_PAGE83>		<SYNC_MASTER83>	<SYNC_DATE83>
	<CSA_PAGE84>		<SYNC_MASTER84>	<SYNC_DATE84>
	<CSA_PAGE85>		<SYNC_MASTER85>	<SYNC_DATE85>
	<CSA_PAGE86>		<SYNC_MASTER86>	<SYNC_DATE86>
	<CSA_PAGE87>		<SYNC_MASTER87>	<SYNC_DATE87>
	<CSA_PAGE88>		<SYNC_MASTER88>	<SYNC_DATE88>
	<CSA_PAGE89>		<SYNC_MASTER89>	<SYNC_DATE89>
	<CSA_PAGE90>		<SYNC_MASTER90>	<SYNC_DATE90>

TABLE OF CONTENTS

Mr Huy - Vietmobile.vn

Schematic & PCB Callouts

PART#	QTY	DESCRIPTION	REFERENCE DESIGNATOR(S)	CRITICAL	BOM OPTION
051-00482	1	SCH,MLB,D11-12	SCH	CRITICAL	?
820-00229	1	PCBF,MLB,D11-12	PCB	CRITICAL	?

SCH 051-00482
BRD 820-00229
MCO 056-01585

System Block Diagram:

<rdar://problem/16684269>

SYNC_MASTER=david-copy SYNC_DATE=03/01/2016

DRAWING TITLE
SCH,MLB,D11

Apple Inc.

DRAWING NUMBER 051-00482 SIZE D
REVISION 8.0.0
BRANCH
PAGE 1 OF 53
SHEET 1 OF 81

NOTICE OF PROPRIETARY PROPERTY:
THE INFORMATION CONTAINED HEREIN IS THE PROPRIETARY PROPERTY OF APPLE INC.
THE POSESSOR AGREES TO THE FOLLOWING:
I TO MAINTAIN THIS DOCUMENT IN CONFIDENCE
II NOT TO REPRODUCE OR COPY IT
III NOT TO REVEAL OR PUBLISH IT IN WHOLE OR PART
IV ALL RIGHTS RESERVED

NAND BOM Options

PART#	QTY	DESCRIPTION	REFERENCE DESIGNATOR(S)	CRITICAL	BOM OPTION
335S00169	1	NAND,H,32GB,16nm,MLC	U1701	CRITICAL	NAND_32G
335S00182	1	NAND,H,128GB,16nm,TLC	U1701	CRITICAL	NAND_128G
335S00183	1	NAND,T,256GB,3Dv3,TLC	U1701	CRITICAL	NAND_256G
138S0867	5	CAP,X5R,10uF,20%,6.3V,0.65MM,HRZTL,0402	C1748,C1713,C1716,C1721,C1733	CRITICAL	NAND_32G
138S00003	5	CAP,X5R,15uF,20%,,6.3V,0.65MM,HRZTL,0402	C1748,C1713,C1716,C1721,C1733	CRITICAL	NAND_128G
138S00003	5	CAP,X5R,15uF,20%,,6.3V,0.65MM,HRZTL,0402	C1748,C1713,C1716,C1721,C1733	CRITICAL	NAND_256G

PART NUMBER	ALTERNATE FOR PART NUMBER	BOM OPTION	REF DES	COMMENTS:
335S00201	335S00169	ALTERNATE	U1701	T,15nm,MLC,32GB
335S00209	335S00169	ALTERNATE	U1701	S,16nm,MLC,32GB
335S00195	335S00182	ALTERNATE	U1701	SS,1Ynm,TLC,128GB
335S00180	335S00182	ALTERNATE	U1701	T,15nm,TLC,128GB
335S00179	335S00182	ALTERNATE	U1701	SD,15nm,TLC,128GB
335S00148	335S00183	ALTERNATE	U1701	SD,3Dv2,TLC,256GB
335S00190	335S00183	ALTERNATE	U1701	SS,3Dv3,TLC,256GB

#22686038:See Radar

Magnesium Alternates

PART NUMBER	ALTERNATE FOR PART NUMBER	BOM OPTION	REF DES	COMMENTS:
338S00173	338S00203	ALTERNATE	U2402	Larger Wafer (-29 flow) Magnesium

UT LDO Alternates

PART NUMBER	ALTERNATE FOR PART NUMBER	BOM OPTION	REF DES	COMMENTS:
353S00889	353S00015	ALTERNATE	U2501	ST, LDO REG, 2.925V, CSP 0.65x0.65

Mamba LDO Alternates

PART NUMBER	ALTERNATE FOR PART NUMBER	BOM OPTION	REF DES	COMMENTS:
353S00932	353S00576	ALTERNATE	U3801	ST, LDO REG, 2.75V

I2C5 Alternate

PART NUMBER	ALTERNATE FOR PART NUMBER	BOM OPTION	REF DES	COMMENTS:
335S00234	335S00233	ALTERNATE	U1101	I2C5 ALTERNATE

Active Diode Alternate

PART NUMBER	ALTERNATE FOR PART NUMBER	BOM OPTION	REF DES	COMMENTS:
376S00106	376S00047	ALTERNATE	Q2101	DIODES INC. ACT DIODE

DDR PLL Alternate

PART NUMBER	ALTERNATE FOR PART NUMBER	BOM OPTION	REF DES	COMMENTS:
155S00095	155S00068	ALTERNATE	FL1501	FERR BD,1000OHM,25%,100MA,230HM,01005

Power Inductor Alternates

PART NUMBER	ALTERNATE FOR PART NUMBER	BOM OPTION	REF DES	COMMENTS:	
152S00118	152S00075	ALTERNATE	ALL	IND,PWR,SHLD,1.2 UH,3.0A,0.080 OHM,2016	
152S00077	152S00397	ALTERNATE	ALL	IND,PWR,SHLD,1.0 UH,2.25A,0.150 OHM,2016	updated 11/12
152S00121	152S00081	ALTERNATE	ALL	IND,PWR,SHLD,0.47 UH,3.8A,0.048 OHM,2012	
152S00123	152S1936	ALTERNATE	ALL	IND,PWR,SHLD,15 UH,0.72A,0.900 OHM,3225	
152S00402	152S00366	ALTERNATE	ALL	IND,MULT,SUM,1.2A,0.320 OHM,0603	updated 11/12
152S00297	152S1843	ALTERNATE	ALL	CYNTEC 2012 10H	reverted 11/13
152S00365	152S00297	ALTERNATE	ALL	CYNTEC 2012 10H	
152S00398	152S00204	ALTERNATE	ALL	IND,PWR,0.22UH,20%,6.7a,22MOHM,2012	For Chestnut inductor; so it doesn't interfere with PMU inducotr Buck 7 alts
152S00120	152S00077	ALTERNATE	ALL	For Chestnut inductor only	Except BUCK5 LX (BUCK5 LX is Taiyo only)
152S00117	152S00074	ALTERNATE	L600,L601,L602,L603,L607	IND,PWR,SHLD,1.0 UH,3.0A,0.060 OHM,2016	

Global R/C Alternates

PART NUMBER	ALTERNATE FOR PART NUMBER	BOM OPTION	REF DES	COMMENTS:
118S0764	118S0717	ALTERNATE	ALL	RES, 3.92K, 0.1%, 0201
138S0702	138S0657	ALTERNATE	ALL	CAP, X5R, 4.3UF, 4V, 0610
138S00006	138S0835	ALTERNATE	ALL	CAP, 3-TERM, 4.3UF, 4V, 0402
138S0648	138S0652	ALTERNATE	ALL	CAP,X5R,4.7uF,6.3V,0.65MM,0402,TAIYO
132S0400	132S0436	ALTERNATE	ALL	CAP,X5R,0.22UF,6.3V,01005,TDK
138S00024	138S0986	ALTERNATE	ALL	CAP,C0G,5-700V,7.5uF,20%,4V,0402,TAIYO/TDK
138S0706	138S0739	ALTERNATE	ALL	CAP,C0B,1UF,20%,10V,X5R,0201,MURATA
138S0945	138S0739	ALTERNATE	ALL	CAP,C0B,1UF,20%,10V,X5R,0201,KYOCERA
132S0436	132S0400	ALTERNATE	ALL	CAP,C0B,X5R,0.22UF,20%,6.3V,20%

Global Ferrite Alternates

PART NUMBER	ALTERNATE FOR PART NUMBER	BOM OPTION	REF DES	COMMENTS:
155S00067	155S0581	ALTERNATE	ALL	FERR, 240OHM, 0.38OHM DCR, 0201
155S0581	155S00067	ALTERNATE	ALL	FERR, 240OHM, 0.38OHM DCR, 0201
155S00012	155S00168	ALTERNATE	ALL	FLTR, 65 OHMS, 0605
155S00194	155S0610	ALTERNATE	ALL	FERR BD, 150OHM, TDK
155S00200	155S0610	ALTERNATE	ALL	FERR BD, 150OHM, TY
152S00489	152S00456	ALTERNATE	ALL	FERR BD, 0.47UH, TY

Global Varistor Alternates

PART NUMBER	ALTERNATE FOR PART NUMBER	BOM OPTION	REF DES	COMMENTS:
377S0168	377S0140	ALTERNATE	ALL	VARISTOR, 6.8V, 180PF, 01005

Acc Buck Alternates

PART NUMBER	ALTERNATE FOR PART NUMBER	BOM OPTION	REF DES	COMMENTS:
371S00087	371S00064	ALTERNATE	D2700	DIODE,SHOTTKY,30V,200MA,0201
152S00558	152S00557	ALTERNATE	L2700	IND,MLD,0.47UH,2.5A,80MOhm,1608
376S00166	376S00164	ALTERNATE	Q2700,Q2701	PFET,12V,CSP4

Load Switch OMIT TABLE

PART#	QTY	DESCRIPTION	REFERENCE DESIGNATOR(S)	CRITICAL	BOM OPTION
353S01007	1	ONSEMI,IC,LOAD,SWITCH,WLCSP4	U2710,NFCSW_RF	CRITICAL	

N&V 15uF Cap Alternates

	PART NUMBER	ALTERNATE FOR PART NUMBER	BOM OPTION	REF DES	COMMENTS:	
MUR+KYO 15UF	138S00005	138S00003	ALTERNATE	C2010,C2025,C2031	CAP,X5R,15uF,6.3V,0.65MM,0402,TY	CPU
	138S00005	138S00003	ALTERNATE	C2037,C2042,C2044	CAP,X5R,15uF,6.3V,0.65MM,0402,TY	
	138S00005	138S00003	ALTERNATE	C2018,C2024,C2032	CAP,X5R,15uF,6.3V,0.65MM,0402,TY	
	138S00005	138S00003	ALTERNATE	C2038,C2041,C2046	CAP,X5R,15uF,6.3V,0.65MM,0402,TY	
	138S00005	138S00003	ALTERNATE	C2401,C2406,C2434	CAP,X5R,15uF,6.3V,0.65MM,0402,TY	
	138S00005	138S00003	ALTERNATE	C2013,C2020,C2027	CAP,X5R,15uF,6.3V,0.65MM,0402,TY	GPU + GPU_SRAM
	138S00005	138S00003	ALTERNATE	C2033,C2039,C2051	CAP,X5R,15uF,6.3V,0.65MM,0402,TY	
	138S00005	138S00003	ALTERNATE	C2014,C2021,C2028	CAP,X5R,15uF,6.3V,0.65MM,0402,TY	
	138S00005	138S00003	ALTERNATE	C2034,C2045,C2432	CAP,X5R,15uF,6.3V,0.65MM,0402,TY	
	138S00005	138S00003	ALTERNATE	C2400,C2410	CAP,X5R,15uF,6.3V,0.65MM,0402,TY	
	138S00048	138S00003	ALTERNATE	ALL	CAP,X5R,15uF,6.3V,0.65MM,0402,KYOCERA	

Mr Huy - Vietmobile.vn

PAGE TITLE
SYSTEM:BOM TABLES

Apple Inc.

DRAWING NUMBER 051-00482 SIZE D
REVISION 8.0.0
BRANCH
PAGE 2 OF 53
SHEET 2 OF 81

NOTICE OF PROPRIETARY PROPERTY:
THE INFORMATION CONTAINED HEREIN IS THE PROPRIETARY PROPERTY OF APPLE INC.
THE POSESSOR AGREES TO THE FOLLOWING:
I TO MAINTAIN THIS DOCUMENT IN CONFIDENCE
II NOT TO REPRODUCE OR COPY IT
III NOT TO REVEAL OR PUBLISH IT IN WHOLE OR PART
IV ALL RIGHTS RESERVED

D11 EEEE CALLOUTS

PART#	QTY	DESCRIPTION	REFERENCE DESIGNATOR(S)	CRITICAL	BOM OPTION
825-6838	1	EEEE CODE FOR 639-01812	EEEE_GY2T	CRITICAL	EEEE_D11_BEST_JP
825-6838	1	EEEE CODE FOR 639-01813	EEEE_GY2V	CRITICAL	EEEE_D11_SUPREME_JP
825-6838	1	EEEE CODE FOR 639-01814	EEEE_GY2W	CRITICAL	EEEE_D11_EXTREME_JP
825-6838	1	EEEE CODE FOR 639-02138	EEEE_H3RN	CRITICAL	EEEE_D11_BEST_ROW
825-6838	1	EEEE CODE FOR 639-02139	EEEE_H3RP	CRITICAL	EEEE_D11_SUPREME_ROW
825-6838	1	EEEE CODE FOR 639-02140	EEEE_H3RQ	CRITICAL	EEEE_D11_EXTREME_ROW
825-6838	1	EEEE CODE FOR 639-02460	EEEE_H8C1	CRITICAL	EEEE_D11_BEST_CH
825-6838	1	EEEE CODE FOR 639-02465	EEEE_H8CK	CRITICAL	EEEE_D11_SUPREME_CH
825-6838	1	EEEE CODE FOR 639-02462	EEEE_H8C3	CRITICAL	EEEE_D11_EXTREME_CH

CAYMAN DDR Alternates

339S00258	339S00257	ALTERNATE	ALL	DDR-S, 3G, B1

CAYMAN OMIT TABLE

PART#	QTY	DESCRIPTION	REFERENCE DESIGNATOR(S)	CRITICAL	BOM OPTION
339S00257	1	CAYMAN, DDR-H, 3G, B1	U0700	CRITICAL	

2.2uF CAP Alts

PART NUMBER	ALTERNATE FOR PART NUMBER	BOM OPTION	REF DES	COMMENTS:
138S00049	138S00032	ALTERNATE	ALL	CAP,CER,X5R,2.2UF,0805X-3V,20%, KYOCERA
138S0031	138S00032	ALTERNATE	ALL	CAP,CER,X5R,2.2UF,20%,6.3V,20%,MURATA

SIP Alternates

PART NUMBER	ALTERNATE FOR PART NUMBER	BOM OPTION	REF DES	COMMENTS:
339M00009	339M00003	ALTERNATE	ALL	TRINITY BLUE,STATS
339M00008	339M00002	ALTERNATE	ALL	NEO,STATS

Mr Huy - Vietmobile.vn

SYNC_MASTER=david-copy SYNC_DATE=03/01/2016

PAGE TITLE
SYSTEM:EEEE CALLOUTS

Apple Inc.

DRAWING NUMBER 051-00482 SIZE D
REVISION 8.0.0
BRANCH
PAGE 3 OF 53
SHEET 3 OF 81

NOTICE OF PROPRIETARY PROPERTY:
THE INFORMATION CONTAINED HEREIN IS THE PROPRIETARY PROPERTY OF APPLE INC.
THE POSESSOR AGREES TO THE FOLLOWING:
I TO MAINTAIN THIS DOCUMENT IN CONFIDENCE
II NOT TO REPRODUCE OR COPY IT
III NOT TO REVEAL OR PUBLISH IT IN WHOLE OR PART
IV ALL RIGHTS RESERVED

Current as of D11 MCO 056-01585 rev. 63

0 0 Contained in radio_mlb pages

BS0415 2.70R1.80-NSP — UP_RFFE

BS0401 2.70R1.80-NSP — CHASSIS_GND_BS401

BS0402 STDOFF-2.90D0.888H-SM — CHASSIS_GND_BS402

BS0403 STDOFF-2.90D0.81H-SM — CHASSIS_GND_BS403

PTH per Rev63 for 1.8mm Drill

0 — NEO Stiffener

NORTH SCREW EXPOSED

#25046211

C0413 220PF 5% 10V C0G-CERM 01005
C0414 56PF 5% 25V NP0-C0G-CERM 01005
C0415 18PF 2% 16V CERM 01005
C0416 4PF +/-0.1PF 16V NP0-C0G 01005

CHASSIS_GND_BS401: C0401 220PF 5% 10V C0G-CERM 01005; C0402 220PF 5% 10V C0G-CERM 01005; C0403 100PF 5% 16V NP0-C0G 01005; C0404 56PF 5% 25V NP0-C0G-CERM 01005; C0405 18PF 2% 16V CERM 01005; C0406 4PF +/-0.1PF 16V NP0-C0G 01005

CHASSIS_GND_BS402: C0407 220PF 5% 10V C0G-CERM 01005; C0408 220PF 5% 10V C0G-CERM 01005; C0409 100PF 5% 16V NP0-C0G 01005; C0410 56PF 5% 25V NP0-C0G-CERM 01005; C0411 18PF 2% 16V CERM 01005; C0412 4PF +/-0.1PF 16V NP0-C0G 01005

CHASSIS_GND_BS403: C0417 220PF 5% 10V C0G-CERM 01005; C0418 220PF 5% 10V C0G-CERM 01005; C0419 100PF 5% 16V NP0-C0G 01005; C0420 56PF 5% 25V NP0-C0G-CERM 01005; C0421 18PF 2% 16V CERM 01005; C0422 4PF +/-0.1PF 16V NP0-C0G 01005

Front Shields

SH0401 SM — SHLD-UP-FRT-D11

SH0403 SM — SHLD-LOWER-FRT-D11

BS0404 2.70R1.80-NSP

Back Shields

SH0400 SM — SHLD-SOFT-UP-BK-D11

SH0402 SM — SHLD-SOFT-LOWER-BK-D11

BS0405 STDOFF-2.90D0.888H-SM

BS0406 STDOFF-2.90D1.9ID-0.85H-SM

CLIP-COAX-RETENTION-D11 — CL0401 SM

TESTPOINTS

POWER

TP0420 — POWER GROUND

PP5V0_USB — TP0421 — VBUS

PP_BATT_VCC — TP0415, TP0422 — VBATT

PP_VDD_MAIN — TP0408 — VDD_MAIN

FD0408 FID 0P5SM1P0SQ-NSP — Note: Fiducial used as test point

LCM

PP_LCM_BL_CAT1_CONN — TP0409 — LCM BACKLIGHT SINK1

PP_LCM_BL_CAT2_CONN — TP0410 — LCM BACKLIGHT SINK2

PP_LCM_BL_ANODE_CONN — TP0411 — LCM BACKLIGHT SOURCE

PP_LCM_BL34_CAT1_CONN — TP0417 — LCM BACKLIGHT SINK3

PP_LCM_BL34_CAT2_CONN — TP0419 — LCM BACKLIGHT SINK4

PP_LCM_BL34_ANODE_CONN — TP0418 — LCM BACKLIGHT SOURCE (3/4)

DFU

PMU_TO_AP_FORCE_DFU — TP0414 — FORCE DFU

E75

90_TRISTAR_DP1_CONN_P — TP0402

90_TRISTAR_DP1_CONN_N — TP0403

90_TRISTAR_DP2_CONN_P — TP0404

90_TRISTAR_DP2_CONN_N — TP0405

PP_TRISTAR_ACC1 — TP0406

PP_TRISTAR_ACC2 — TP0407

ACCESSORY ID AND POWER

TP0416 — TP IS TO HELP WITH USB SI IN THE FACTORY FIXTURE.

TRISTAR_CON_DETECT_L — TP0412 — FOR DIAGS

AMUX

PMU_AMUX_AY — TP0413 — ANALOG MUX A OUTPUT

#25244799 100k to 200k — R0413 200K 1% 1/32W MF 01005 ROOM=SOC

PMU_AMUX_BY — TP0423 — ANALOG MUX B OUTPUT

Note: Fiducial used as test point

MOJAVE

MESA_TO_BOOST_EN — TP0400

PP16V0_MESA — TP0401

FIDUCIALS

FD0410, FD0409, FD0405, FD0406, FD0404, FD0403, FD0402, FD0401, FD0400 — FID 0P5SQ-SMP3SQ-NSP ROOM=ASSEMBLY

FD0407 FID 0P5SM1P0SQ-NSP ROOM=TEST

FD0411 FID 0P5SQ-SMP3SQ-NSP

TOP SIDE

PAGE TITLE: SYSTEM:MECHANICAL COMPONENTS

Apple Inc.

DRAWING NUMBER: 051-00482 SIZE: D

REVISION: 8.0.0

BRANCH

PAGE: 4 OF 53

SHEET: 4 OF 81

NOTICE OF PROPRIETARY PROPERTY:
THE INFORMATION CONTAINED HEREIN IS THE PROPRIETARY PROPERTY OF APPLE INC.
THE POSESSOR AGREES TO THE FOLLOWING:
I TO MAINTAIN THIS DOCUMENT IN CONFIDENCE
II NOT TO REPRODUCE OR COPY IT
III NOT TO REVEAL OR PUBLISH IT IN WHOLE OR PART
IV ALL RIGHTS RESERVED

BOOTSTRAPPING:BOARD REV
BOARD ID
BOOT CONFIG

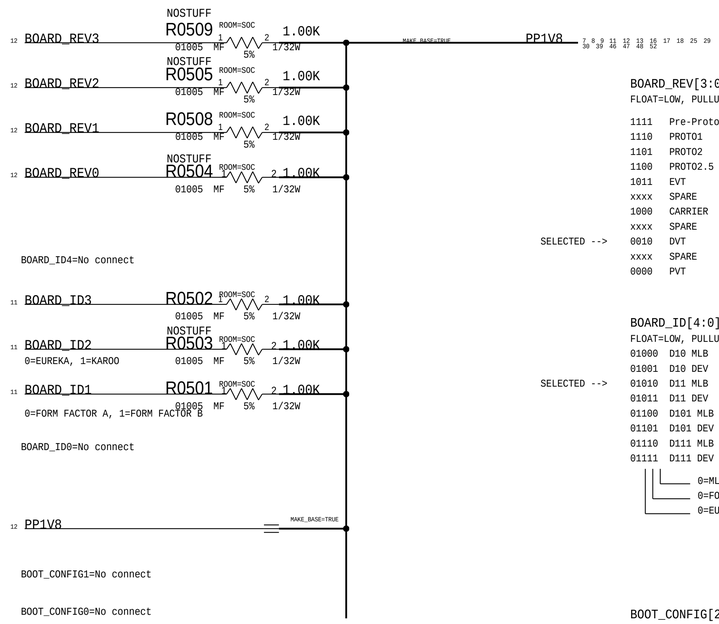

BOARD_REV[3:0]
FLOAT=LOW, PULLUP=HIGH

	1111	Pre-Proto w/D520 (non enclosure)
	1110	PROTO1
	1101	PROTO2
	1100	PROTO2.5
	1011	EVT
	xxxx	SPARE
	1000	CARRIER
	xxxx	SPARE
SELECTED -->	0010	DVT
	xxxx	SPARE
	0000	PVT

BOARD_ID[4:0]
FLOAT=LOW, PULLUP=HIGH

	01000	D10 MLB
	01001	D10 DEV
SELECTED -->	01010	D11 MLB
	01011	D11 DEV
	01100	D101 MLB
	01101	D101 DEV
	01110	D111 MLB
	01111	D111 DEV

0=MLB, 1=DEV
0=FORM FACTOR A, 1=FORM FACTOR B
0=EUREKA, 1=KAROO

BOOT_CONFIG[2:0]
FLOAT=LOW, PULLUP=HIGH

	000	SPI0
	001	SPI0 TEST MODE
	010	NVME0_X2
	011	NVME0 X2 TEST
SELECTED -->	100	NVME0 X1
	101	NVME0 X1 TEST
	110	SLOW SPI0 TEST
	111	FAST SPI0 TEST

SYNC_MASTER=david-copy SYNC_DATE=03/01/2016

PAGE TITLE
SYSTEM: BOARDID

Apple Inc.

DRAWING NUMBER 051-00482
SIZE D
REVISION 8.0.0
BRANCH
PAGE 5 OF 53
SHEET 5 OF 81

NOTICE OF PROPRIETARY PROPERTY:
THE INFORMATION CONTAINED HEREIN IS THE PROPRIETARY PROPERTY OF APPLE INC.
THE POSESSOR AGREES TO THE FOLLOWING:
I TO MAINTAIN THIS DOCUMENT IN CONFIDENCE
II NOT TO REPRODUCE OR COPY IT
III NOT TO REVEAL OR PUBLISH IT IN WHOLE OR PART
IV ALL RIGHTS RESERVED

Mr Huy - Vietmobile.vn

PAGE TITLE
spare

Apple Inc.

DRAWING NUMBER 051-00482
SIZE D
REVISION 8.0.0
BRANCH
PAGE 6 OF 53
SHEET 6 OF 81

NOTICE OF PROPRIETARY PROPERTY:
THE INFORMATION CONTAINED HEREIN IS THE PROPRIETARY PROPERTY OF APPLE INC.
THE POSESSOR AGREES TO THE FOLLOWING:
I TO MAINTAIN THIS DOCUMENT IN CONFIDENCE
II NOT TO REPRODUCE OR COPY IT
III NOT TO REVEAL OR PUBLISH IT IN WHOLE OR PART
IV ALL RIGHTS RESERVED

SOC - USB, JTAG, XTAL

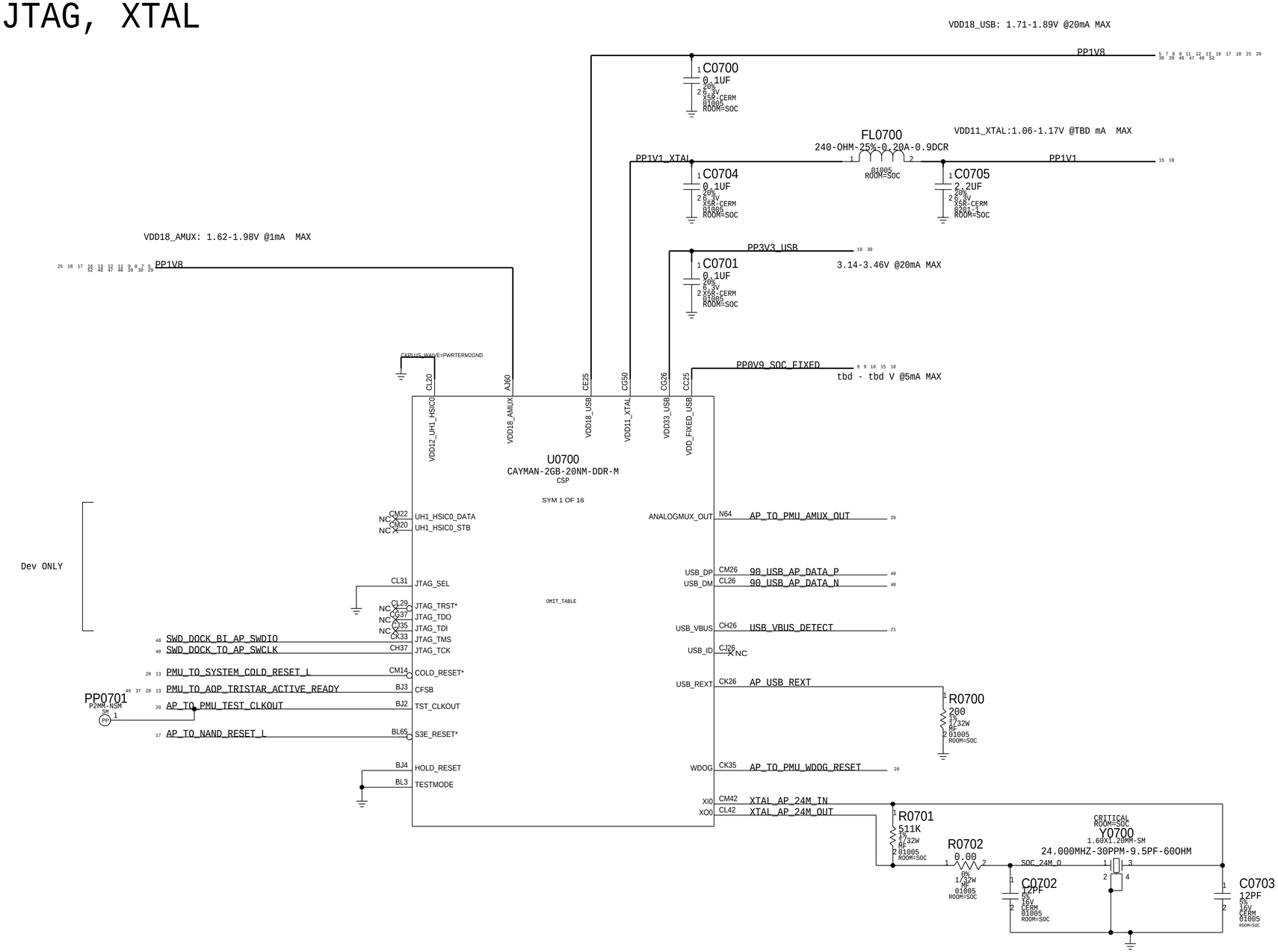

PAGE TITLE	SOC:JTAG,USB,XTAL
Apple Inc.	DRAWING NUMBER 051-00482 SIZE D
	REVISION 8.0.0
	BRANCH
	PAGE 7 OF 53
	SHEET 7 OF 81

NOTICE OF PROPRIETARY PROPERTY:
THE INFORMATION CONTAINED HEREIN IS THE PROPRIETARY PROPERTY OF APPLE INC.
THE POSESSOR AGREES TO THE FOLLOWING:
I TO MAINTAIN THIS DOCUMENT IN CONFIDENCE
II NOT TO REPRODUCE OR COPY IT
III NOT TO REVEAL OR PUBLISH IT IN WHOLE OR PART
IV ALL RIGHTS RESERVED

SOC - PCIE INTERFACES

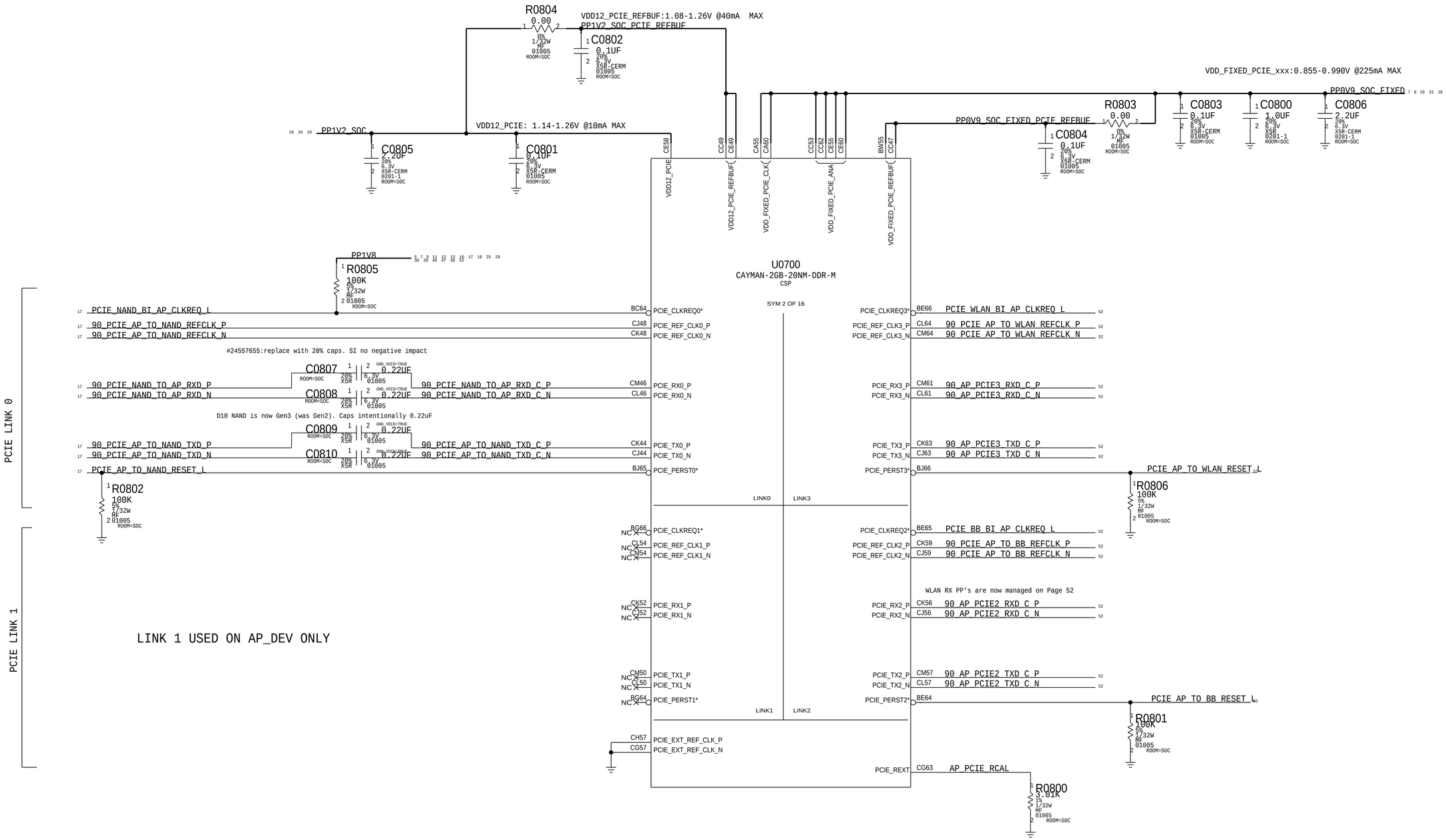

PAGE TITLE	SOC:PCIE
Apple Inc.	DRAWING NUMBER 051-00482 SIZE D
	REVISION 8.0.0
	BRANCH
	PAGE 8 OF 53
	SHEET 8 OF 81

NOTICE OF PROPRIETARY PROPERTY:
THE INFORMATION CONTAINED HEREIN IS THE PROPRIETARY PROPERTY OF APPLE INC.
THE POSESSOR AGREES TO THE FOLLOWING:
I TO MAINTAIN THIS DOCUMENT IN CONFIDENCE
II NOT TO REPRODUCE OR COPY IT
III NOT TO REVEAL OR PUBLISH IT IN WHOLE OR PART
IV ALL RIGHTS RESERVED

SOC - MIPI & ISP INTERFACES

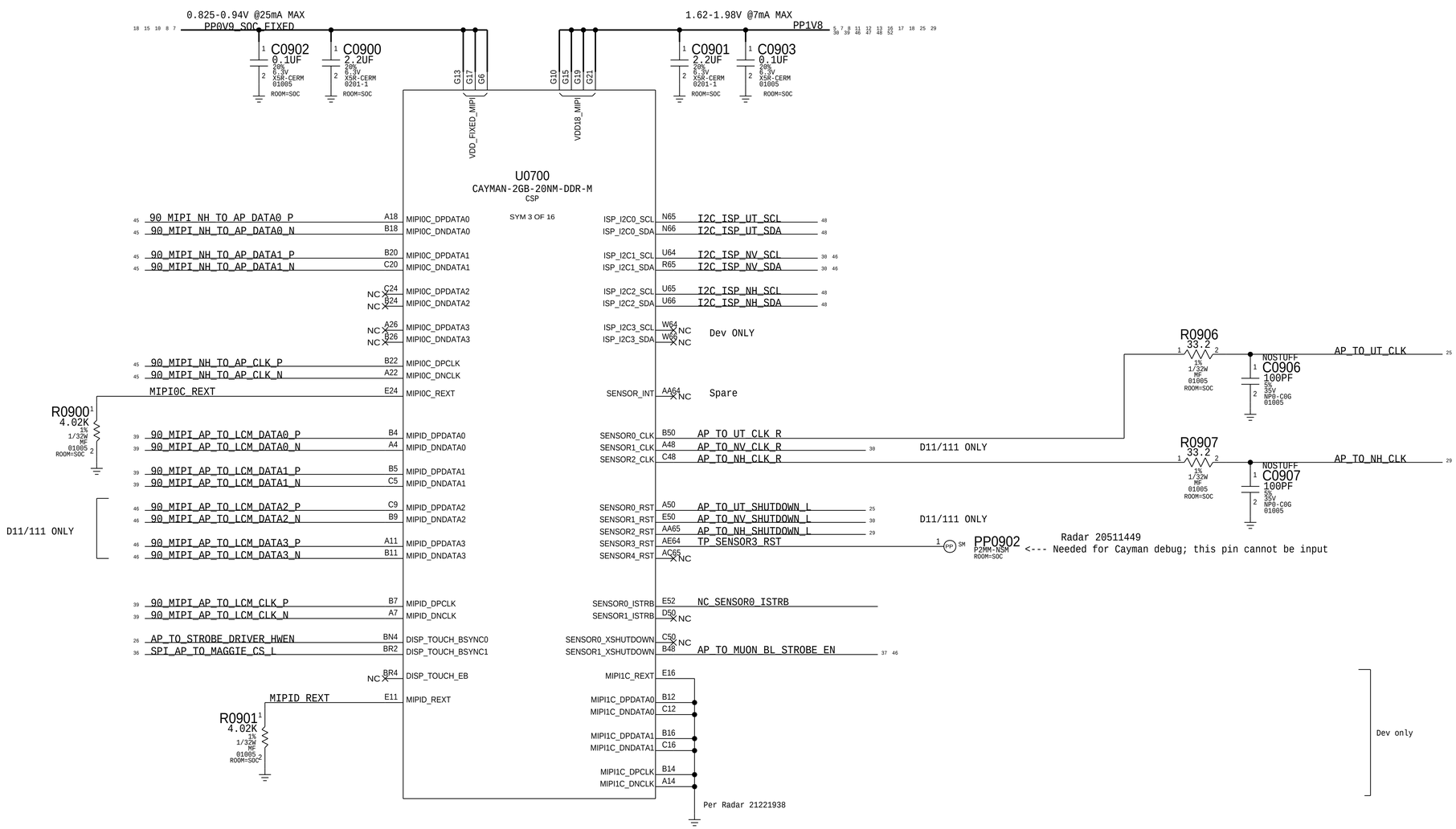

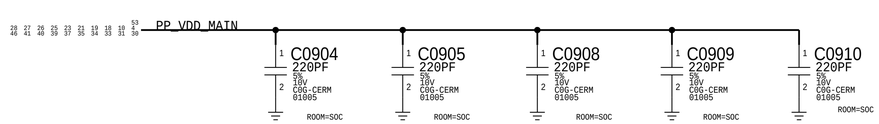

PAGE TITLE

SOC:MIPI AND ISP

Apple Inc.

DRAWING NUMBER 051-00482 SIZE D

REVISION 8.0.0

BRANCH

PAGE 9 OF 53

SHEET 9 OF 81

NOTICE OF PROPRIETARY PROPERTY:
THE INFORMATION CONTAINED HEREIN IS THE PROPRIETARY PROPERTY OF APPLE INC.
THE POSESSOR AGREES TO THE FOLLOWING:
I TO MAINTAIN THIS DOCUMENT IN CONFIDENCE
II NOT TO REPRODUCE OR COPY IT
III NOT TO REVEAL OR PUBLISH IT IN WHOLE OR PART
IV ALL RIGHTS RESERVED

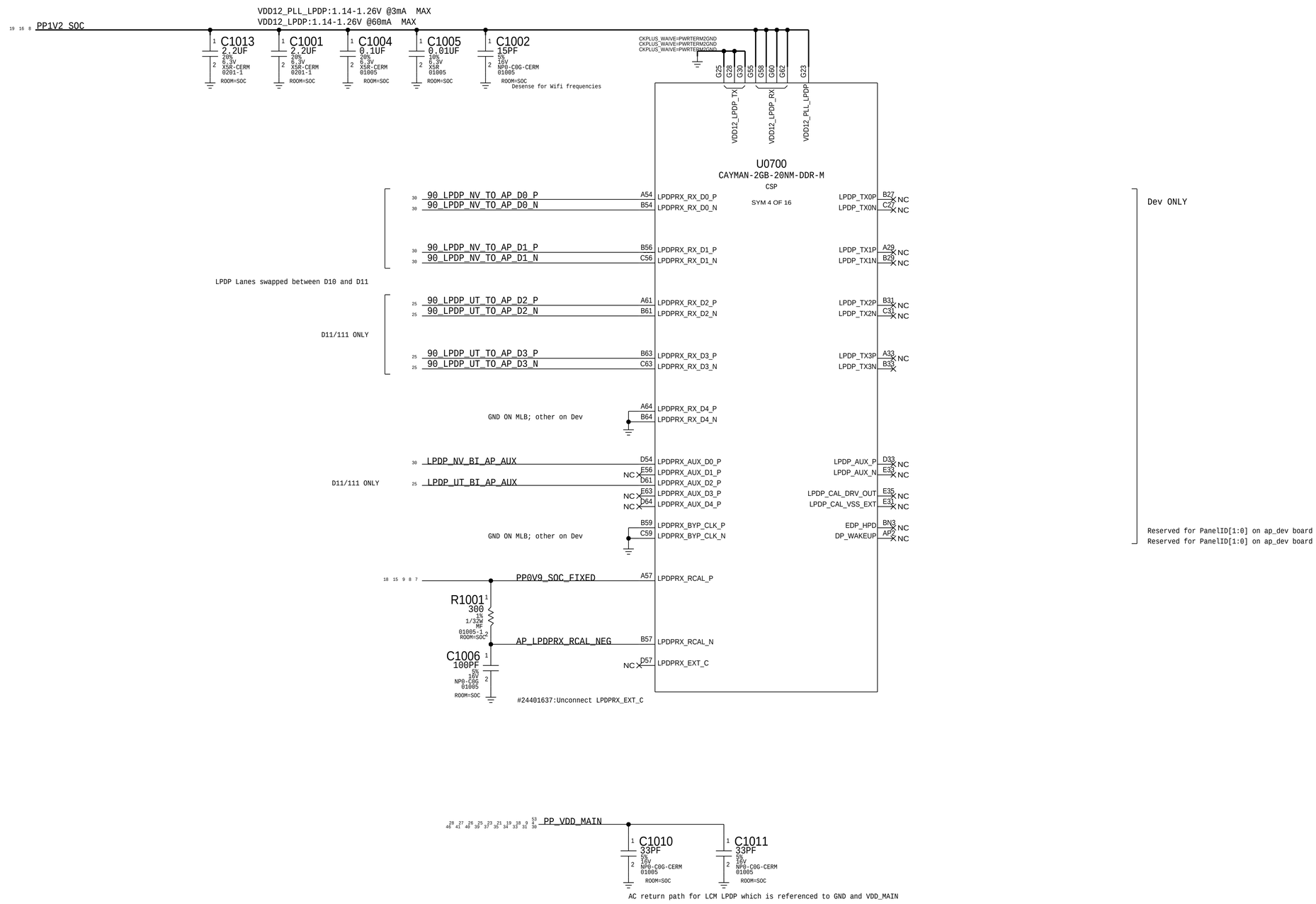

PAGE TITLE

SOC:LPDP

Apple Inc.

DRAWING NUMBER 051-00482 SIZE D

REVISION 8.0.0

BRANCH

PAGE 10 OF 53

SHEET 10 OF 81

NOTICE OF PROPRIETARY PROPERTY:

THE INFORMATION CONTAINED HEREIN IS THE PROPRIETARY PROPERTY OF APPLE INC.
THE POSESSOR AGREES TO THE FOLLOWING:
I TO MAINTAIN THIS DOCUMENT IN CONFIDENCE
II NOT TO REPRODUCE OR COPY IT
III NOT TO REVEAL OR PUBLISH IT IN WHOLE OR PART
IV ALL RIGHTS RESERVED

SOC - SERIAL INTERFACES

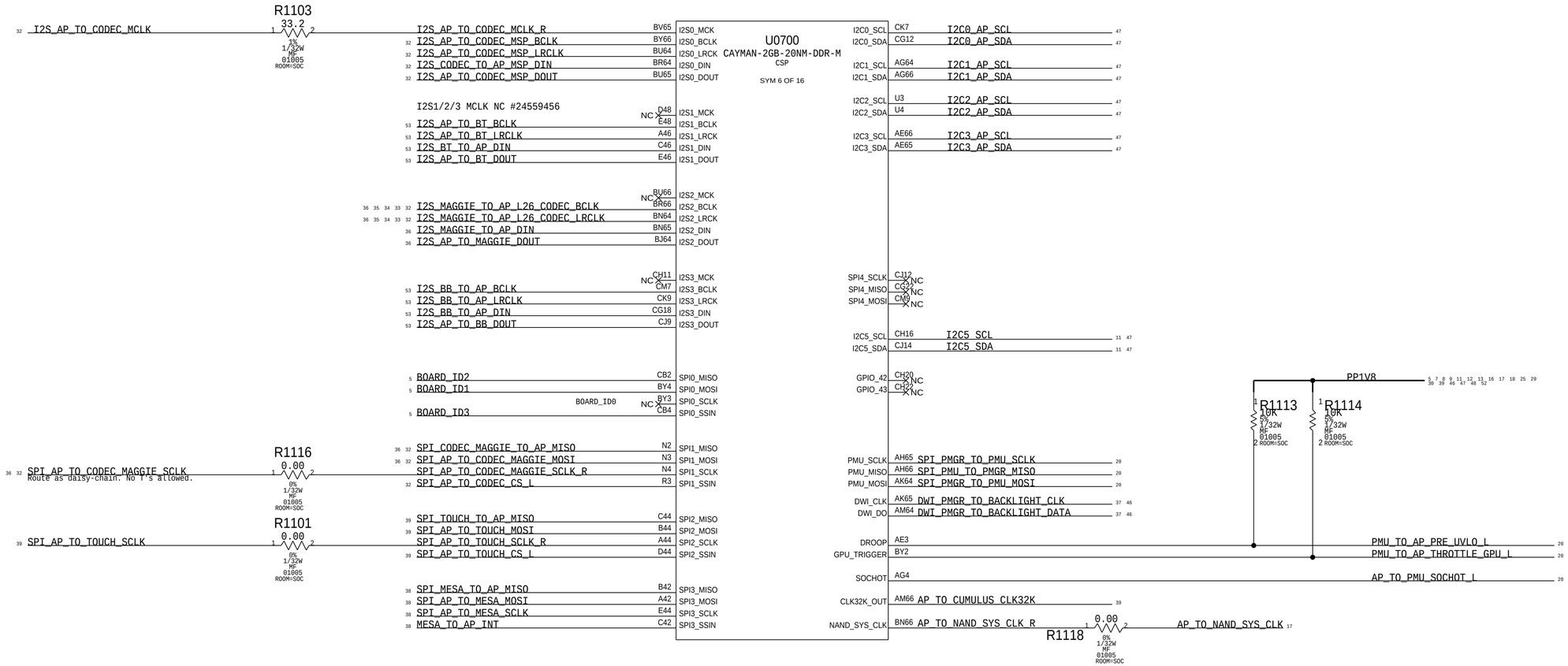

I2C5

See Radar#25316444 for Details

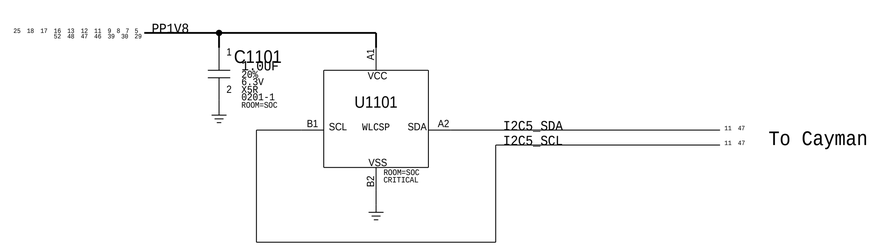

PAGE TITLE	SOC:SERIAL
Apple Inc.	DRAWING NUMBER 051-00482 SIZE D
	REVISION 8.0.0
NOTICE OF PROPRIETARY PROPERTY: THE INFORMATION CONTAINED HEREIN IS THE PROPRIETARY PROPERTY OF APPLE INC. THE POSESSOR AGREES TO THE FOLLOWING: I TO MAINTAIN THIS DOCUMENT IN CONFIDENCE II NOT TO REPRODUCE OR COPY IT III NOT TO REVEAL OR PUBLISH IT IN WHOLE OR PART IV ALL RIGHTS RESERVED	BRANCH
	PAGE 11 OF 53
	SHEET 11 OF 81

SOC - GPIO INTERFACES

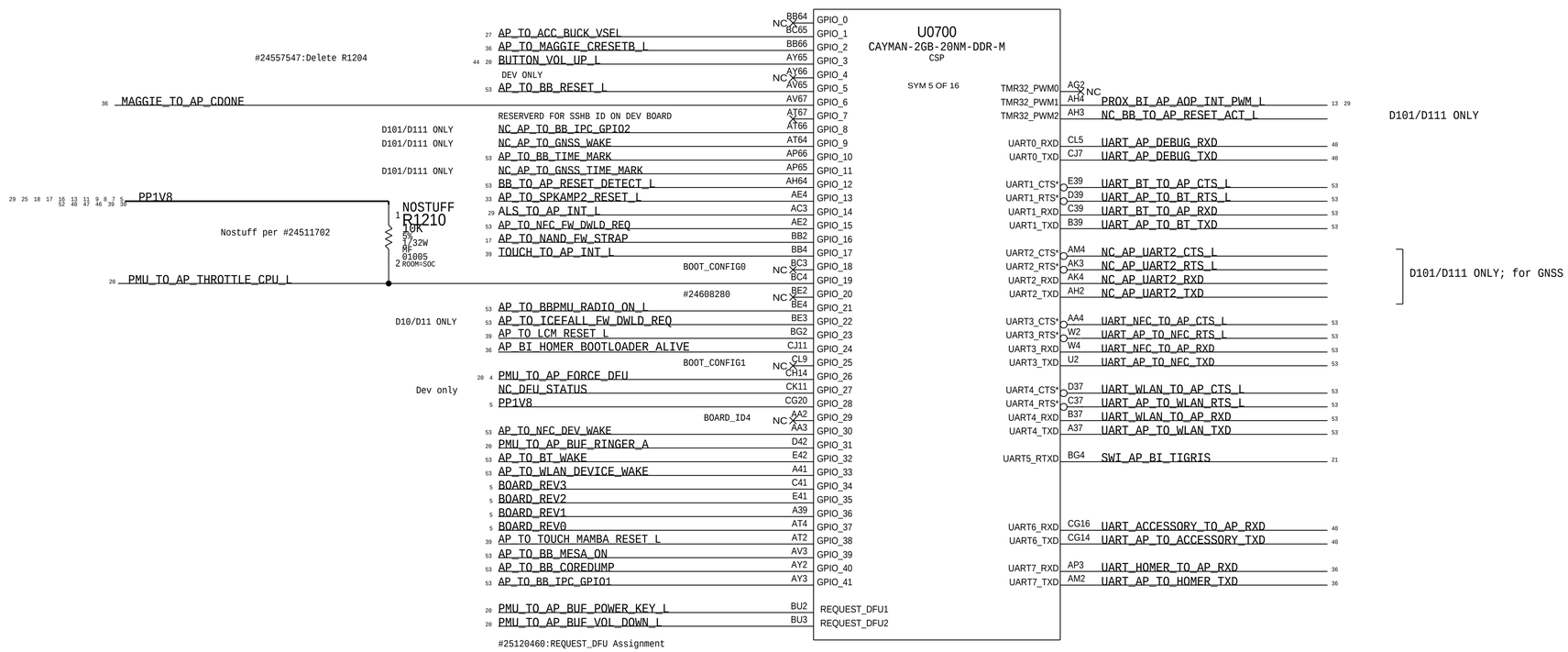

PAGE TITLE

SOC:GPIO & UART

Apple Inc.

DRAWING NUMBER 051-00482

SIZE D

REVISION 8.0.0

BRANCH

PAGE 12 OF 53

SHEET 12 OF 81

NOTICE OF PROPRIETARY PROPERTY:
THE INFORMATION CONTAINED HEREIN IS THE PROPRIETARY PROPERTY OF APPLE INC.
THE POSESSOR AGREES TO THE FOLLOWING:
I TO MAINTAIN THIS DOCUMENT IN CONFIDENCE
II NOT TO REPRODUCE OR COPY IT
III NOT TO REVEAL OR PUBLISH IT IN WHOLE OR PART
IV ALL RIGHTS RESERVED

SOC - AOP

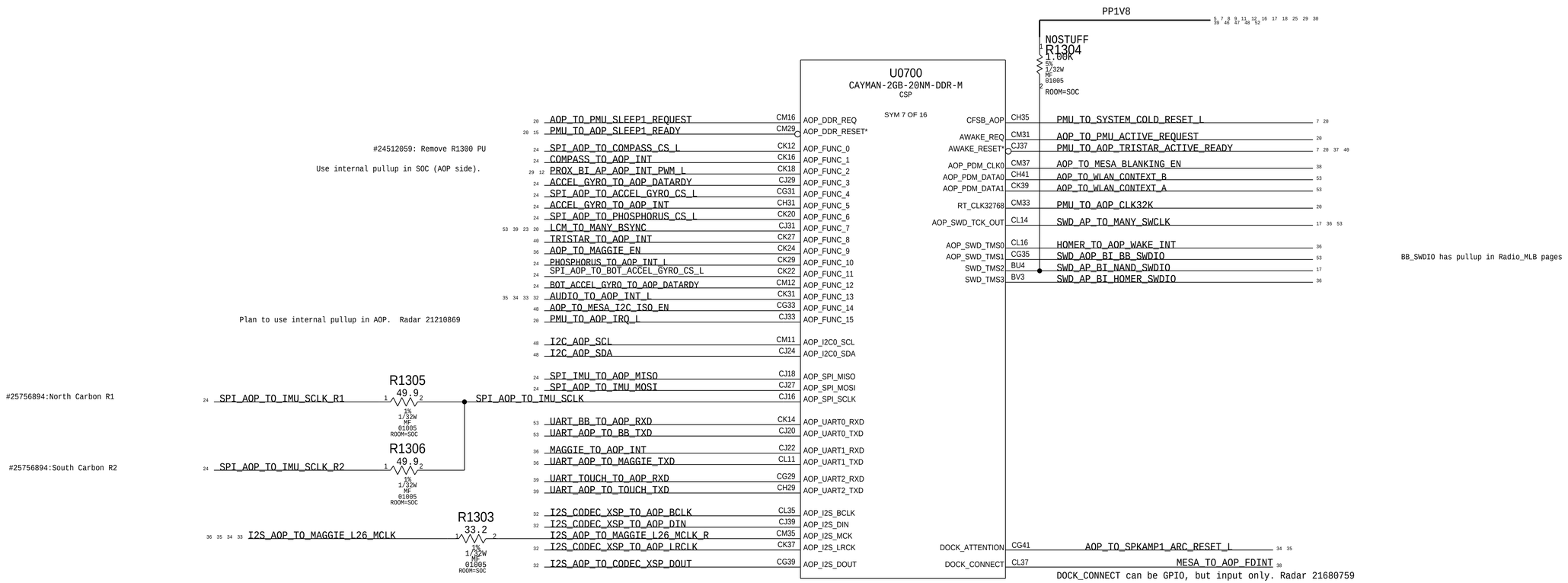

PAGE TITLE

SOC:AOP

Apple Inc.

DRAWING NUMBER 051-00482 SIZE D

REVISION 8.0.0

BRANCH

PAGE 13 OF 53

SHEET 13 OF 81

NOTICE OF PROPRIETARY PROPERTY:
THE INFORMATION CONTAINED HEREIN IS THE PROPRIETARY PROPERTY OF APPLE INC.
THE POSESSOR AGREES TO THE FOLLOWING:
I TO MAINTAIN THIS DOCUMENT IN CONFIDENCE
II NOT TO REPRODUCE OR COPY IT
III NOT TO REVEAL OR PUBLISH IT IN WHOLE OR PART
IV ALL RIGHTS RESERVED

SOC - CPU, GPU & SOC RAILS

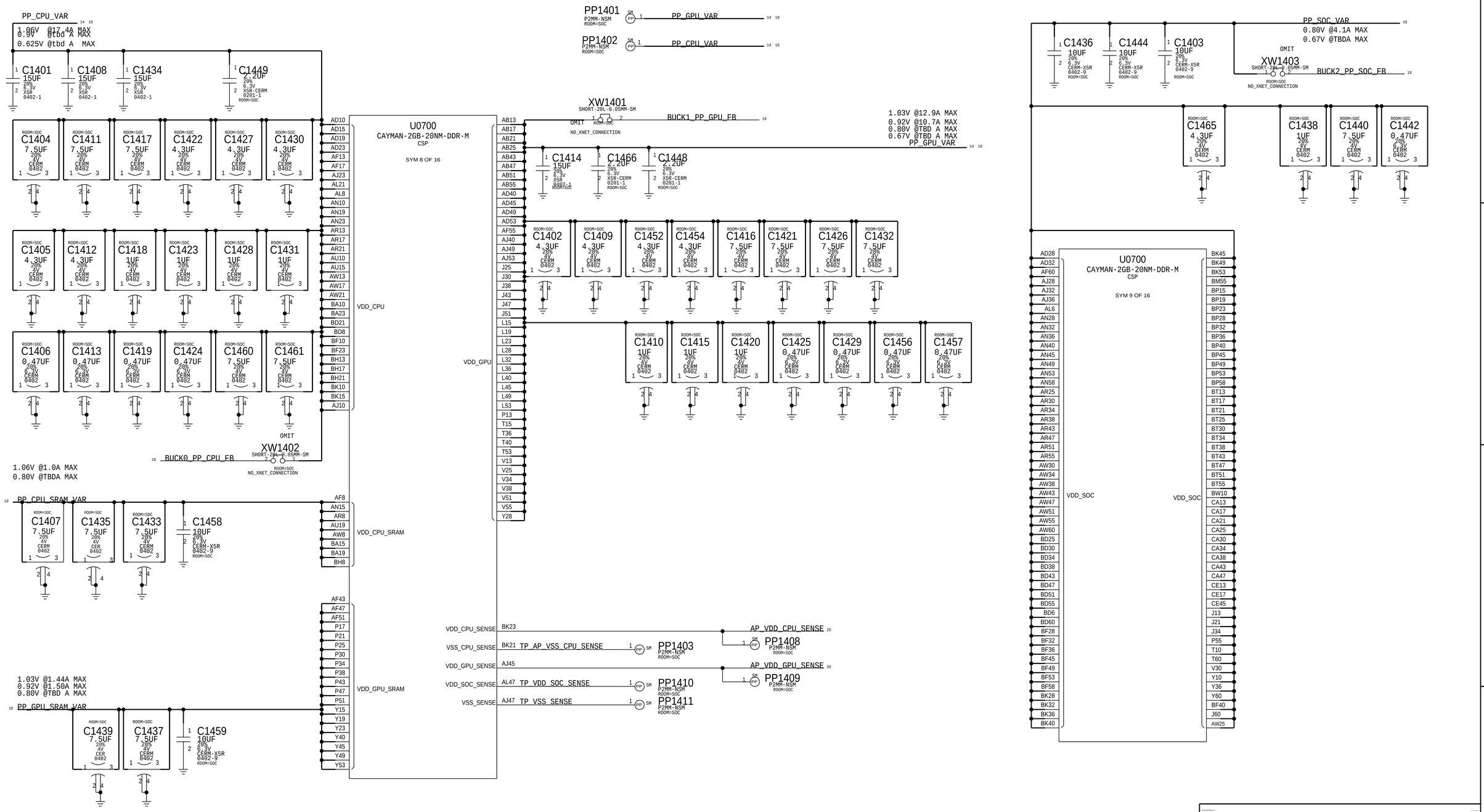

PAGE TITLE	SOC:POWER (1/3)
Apple Inc.	DRAWING NUMBER 051-00482 SIZE D
	REVISION 8.0.0
	BRANCH
	PAGE 14 OF 53
	SHEET 14 OF 81

NOTICE OF PROPRIETARY PROPERTY:
THE INFORMATION CONTAINED HEREIN IS THE PROPRIETARY PROPERTY OF APPLE INC.
THE POSESSOR AGREES TO THE FOLLOWING:
I TO MAINTAIN THIS DOCUMENT IN CONFIDENCE
II NOT TO REPRODUCE OR COPY IT
III NOT TO REVEAL OR PUBLISH IT IN WHOLE OR PART
IV ALL RIGHTS RESERVED

SOC - POWER SUPPLIES

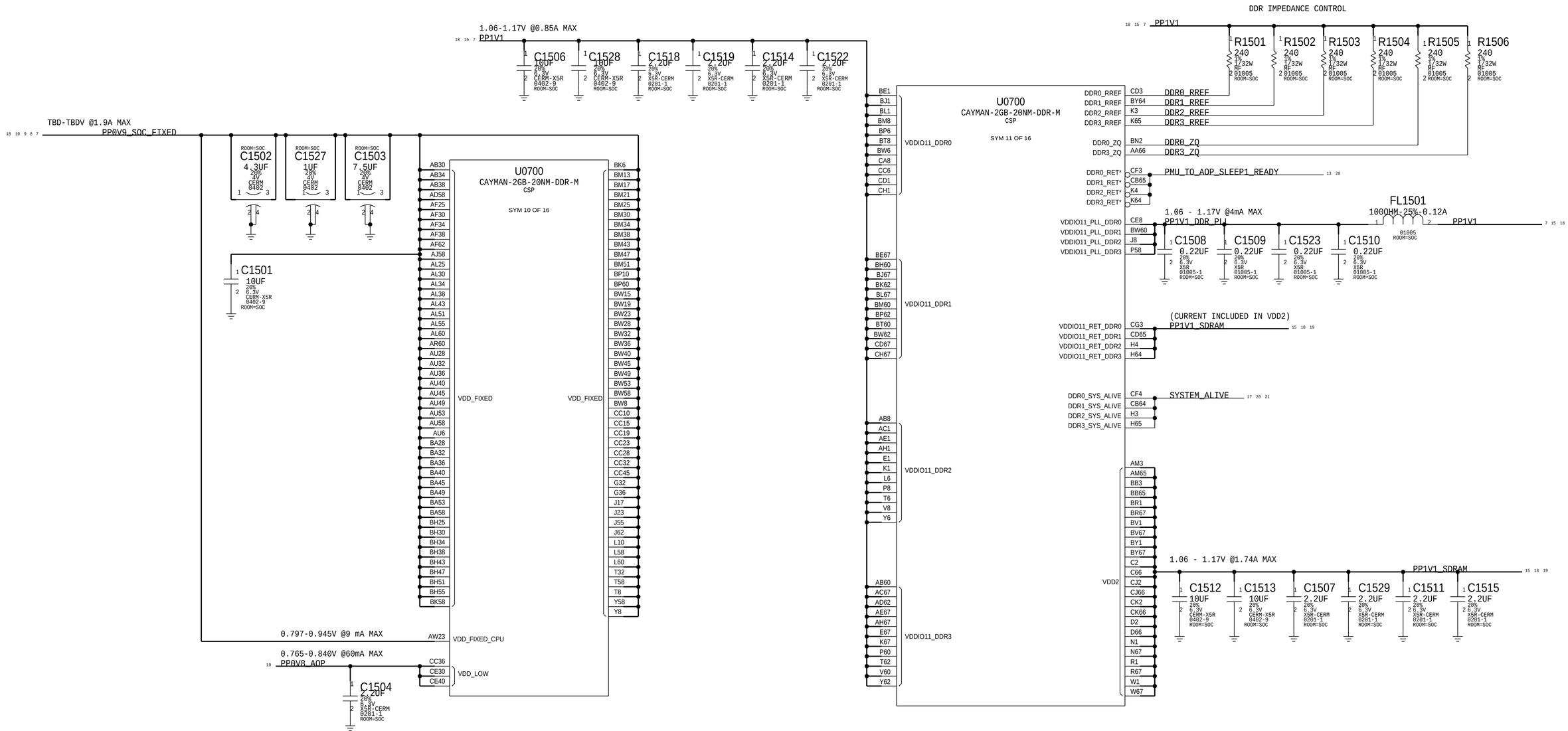

PAGE TITLE
SOC:POWER (2/3)

Apple Inc.

DRAWING NUMBER 051-00482 SIZE D
REVISION 8.0.0
BRANCH
PAGE 15 OF 53
SHEET 15 OF 81

NOTICE OF PROPRIETARY PROPERTY:
THE INFORMATION CONTAINED HEREIN IS THE PROPRIETARY PROPERTY OF APPLE INC.
THE POSESSOR AGREES TO THE FOLLOWING:
I TO MAINTAIN THIS DOCUMENT IN CONFIDENCE
II NOT TO REPRODUCE OR COPY IT
III NOT TO REVEAL OR PUBLISH IT IN WHOLE OR PART
IV ALL RIGHTS RESERVED

SOC - POWER SUPPLIES

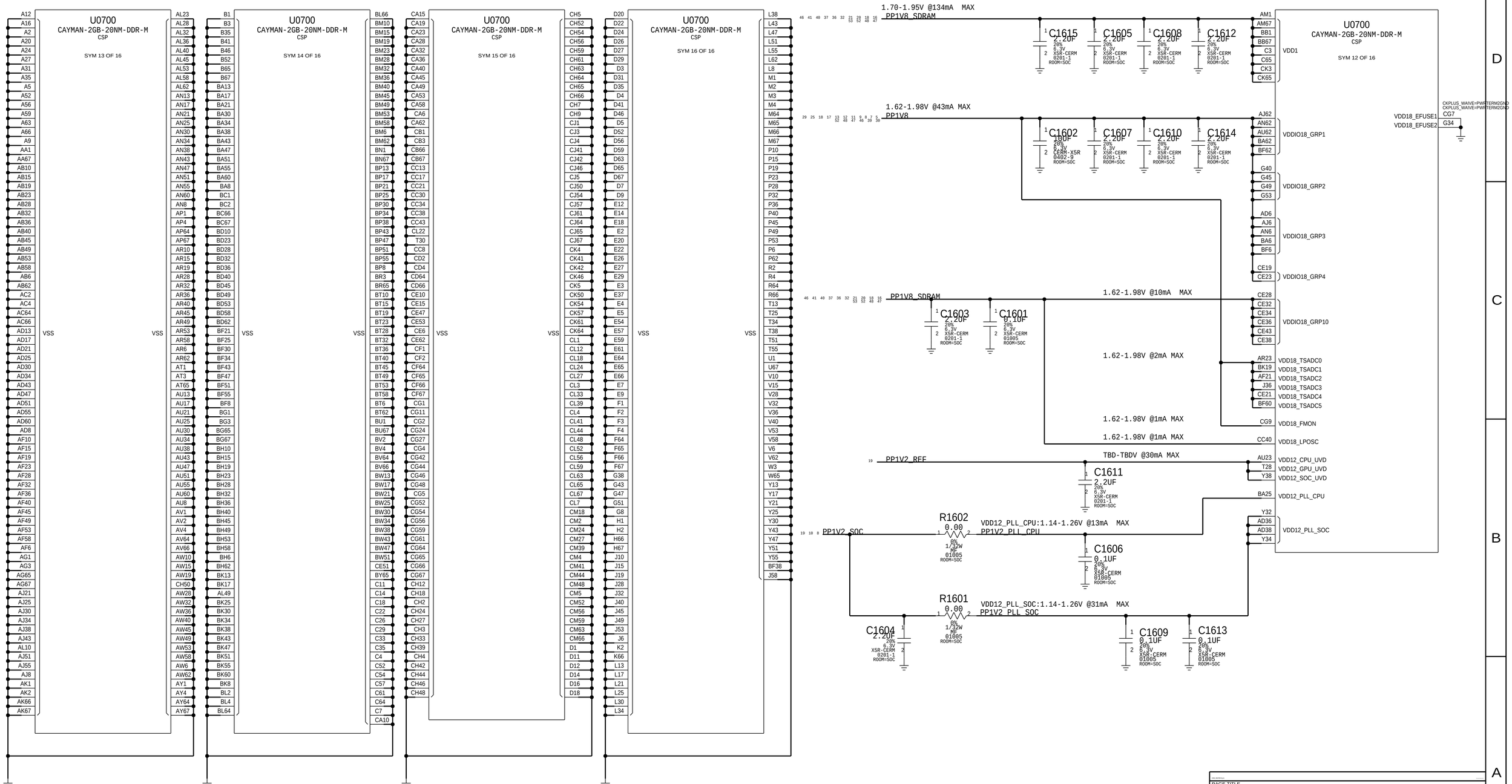

PAGE TITLE

SOC:POWER (3/3)

Apple Inc.

DRAWING NUMBER 051-00482 SIZE D

REVISION 8.0.0

BRANCH

PAGE 16 OF 53

SHEET 16 OF 81

NOTICE OF PROPRIETARY PROPERTY:

THE INFORMATION CONTAINED HEREIN IS THE PROPRIETARY PROPERTY OF APPLE INC.
THE POSESSOR AGREES TO THE FOLLOWING:
I TO MAINTAIN THIS DOCUMENT IN CONFIDENCE
II NOT TO REPRODUCE OR COPY IT
III NOT TO REVEAL OR PUBLISH IT IN WHOLE OR PART
IV ALL RIGHTS RESERVED

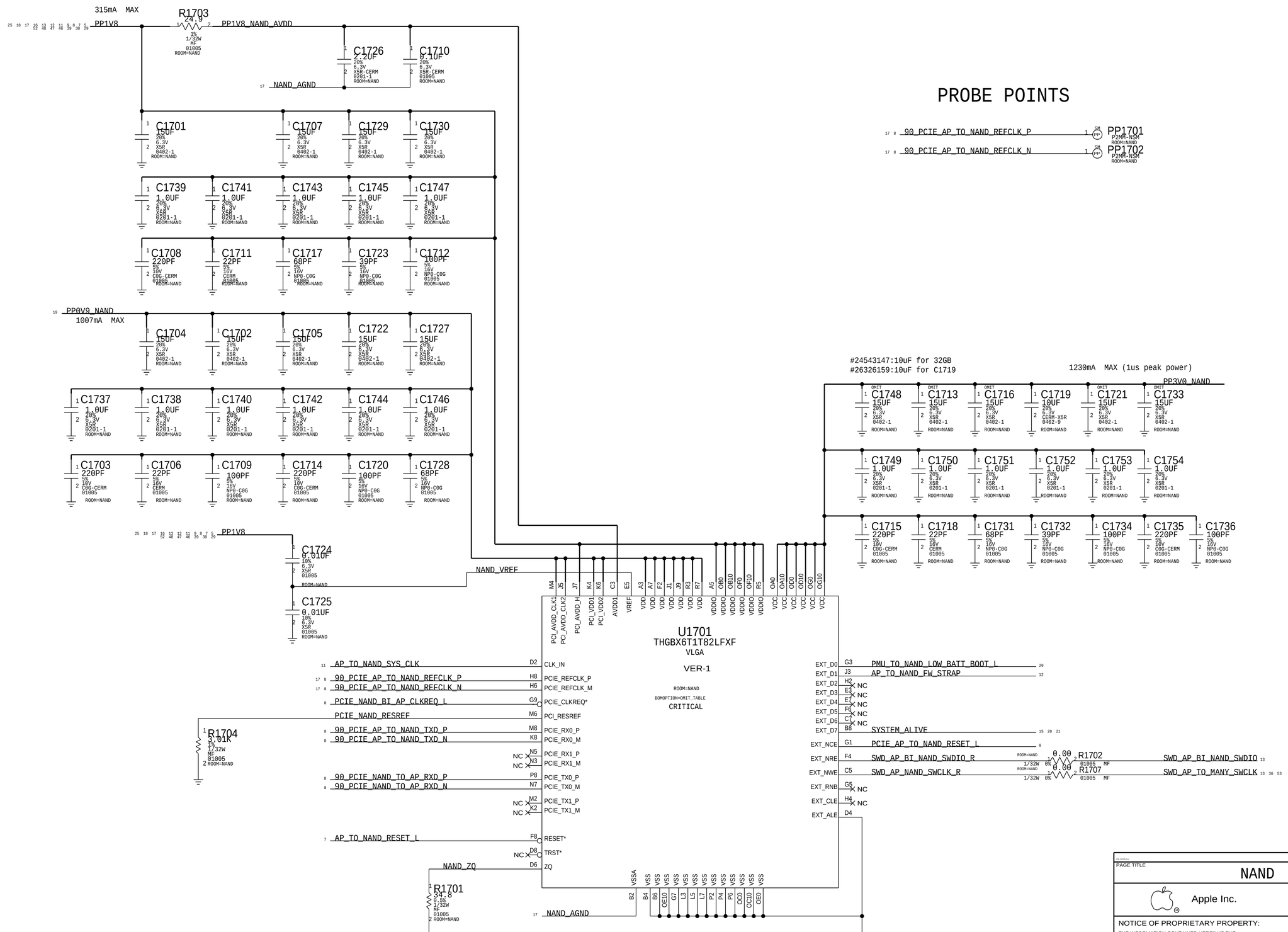

PAGE TITLE

NAND

Apple Inc.

DRAWING NUMBER 051-00482 SIZE D

REVISION 8.0.0

BRANCH

PAGE 17 OF 53

SHEET 17 OF 81

NOTICE OF PROPRIETARY PROPERTY:

THE INFORMATION CONTAINED HEREIN IS THE PROPRIETARY PROPERTY OF APPLE INC.
THE POSESSOR AGREES TO THE FOLLOWING:
I TO MAINTAIN THIS DOCUMENT IN CONFIDENCE
II NOT TO REPRODUCE OR COPY IT
III NOT TO REVEAL OR PUBLISH IT IN WHOLE OR PART
IV ALL RIGHTS RESERVED

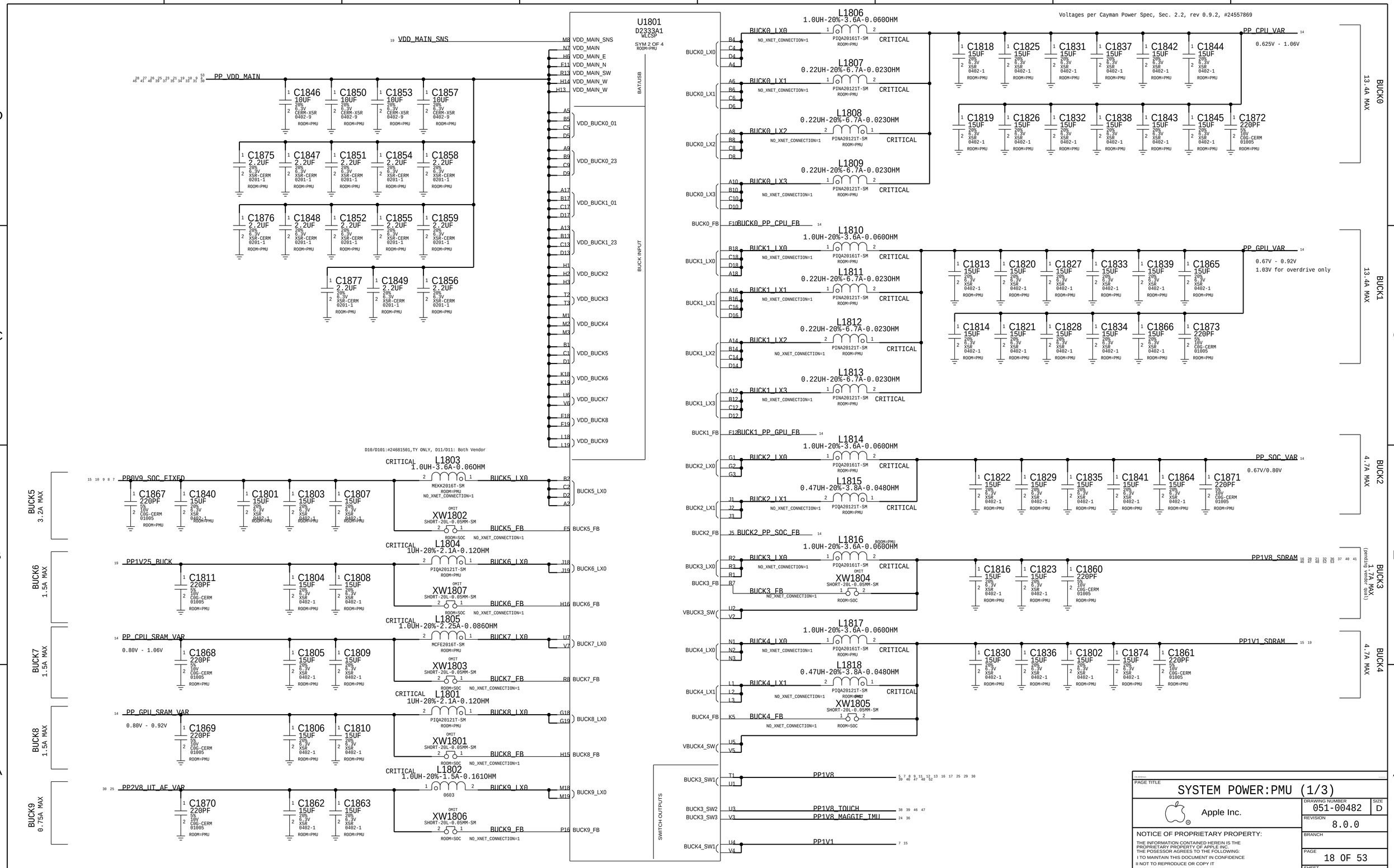

PAGE TITLE

SYSTEM POWER:PMU (1/3)

Apple Inc.

DRAWING NUMBER 051-00482

SIZE D

REVISION 8.0.0

BRANCH

PAGE 18 OF 53

SHEET 18 OF 81

NOTICE OF PROPRIETARY PROPERTY:

THE INFORMATION CONTAINED HEREIN IS THE PROPRIETARY PROPERTY OF APPLE INC.
THE POSESSOR AGREES TO THE FOLLOWING:
I TO MAINTAIN THIS DOCUMENT IN CONFIDENCE
II NOT TO REPRODUCE OR COPY IT
III NOT TO REVEAL OR PUBLISH IT IN WHOLE OR PART
IV ALL RIGHTS RESERVED

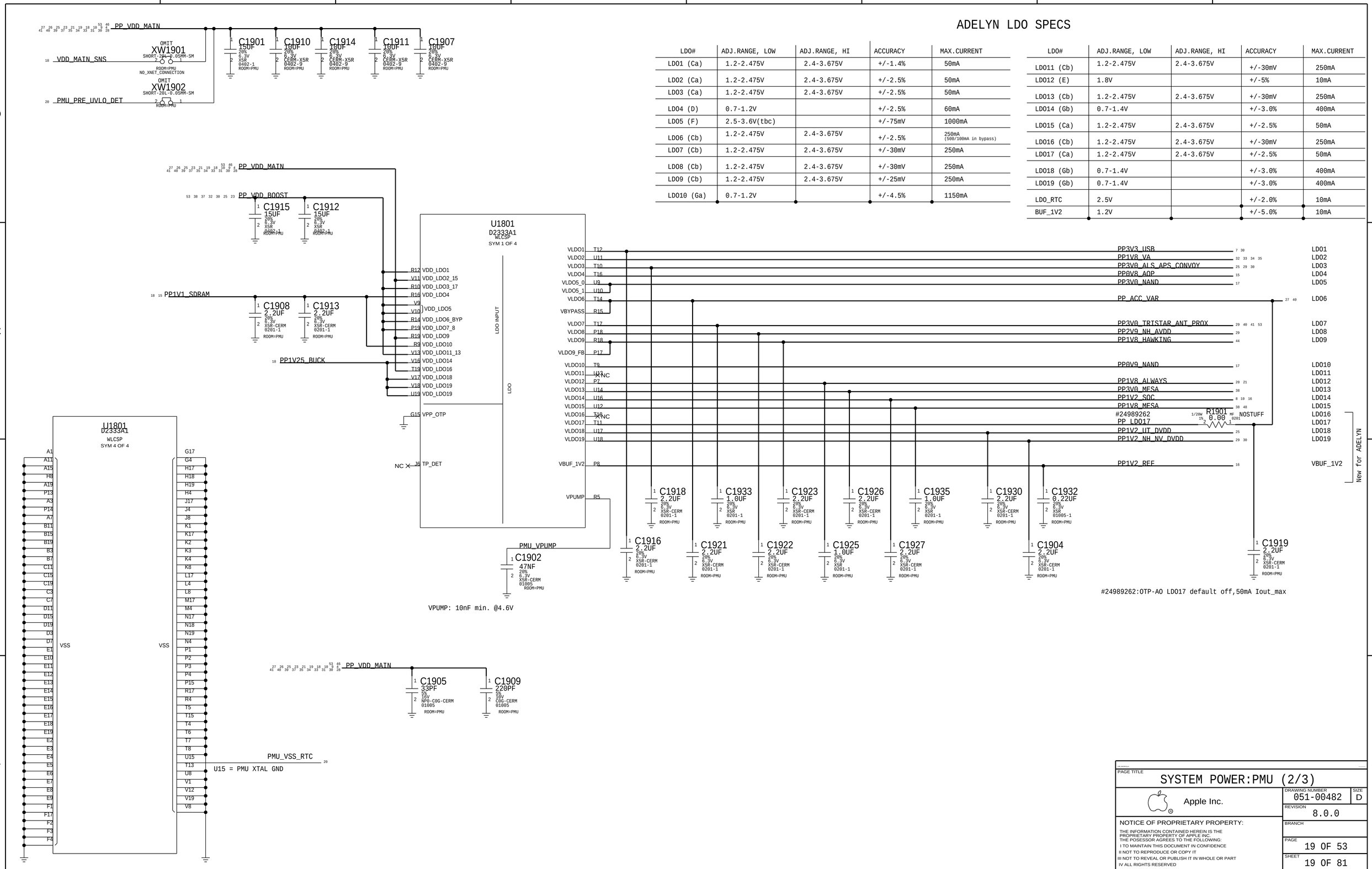

ADELYN LDO SPECS

LDO#	ADJ.RANGE, LOW	ADJ.RANGE, HI	ACCURACY	MAX.CURRENT
LDO1 (Ca)	1.2-2.475V	2.4-3.675V	+/-1.4%	50mA
LDO2 (Ca)	1.2-2.475V	2.4-3.675V	+/-2.5%	50mA
LDO3 (Ca)	1.2-2.475V	2.4-3.675V	+/-2.5%	50mA
LDO4 (D)	0.7-1.2V		+/-2.5%	60mA
LDO5 (F)	2.5-3.6V(tbc)		+/-75mV	1000mA
LDO6 (Cb)	1.2-2.475V	2.4-3.675V	+/-2.5%	250mA (500/100mA in bypass)
LDO7 (Cb)	1.2-2.475V	2.4-3.675V	+/-30mV	250mA
LDO8 (Cb)	1.2-2.475V	2.4-3.675V	+/-30mV	250mA
LDO9 (Cb)	1.2-2.475V	2.4-3.675V	+/-25mV	250mA
LDO10 (Ga)	0.7-1.2V		+/-4.5%	1150mA

LDO#	ADJ.RANGE, LOW	ADJ.RANGE, HI	ACCURACY	MAX.CURRENT
LDO11 (Cb)	1.2-2.475V	2.4-3.675V	+/-30mV	250mA
LDO12 (E)	1.8V		+/-5%	10mA
LDO13 (Cb)	1.2-2.475V	2.4-3.675V	+/-30mV	250mA
LDO14 (Gb)	0.7-1.4V		+/-3.0%	400mA
LDO15 (Ca)	1.2-2.475V	2.4-3.675V	+/-2.5%	50mA
LDO16 (Cb)	1.2-2.475V	2.4-3.675V	+/-30mV	250mA
LDO17 (Ca)	1.2-2.475V	2.4-3.675V	+/-2.5%	50mA
LDO18 (Gb)	0.7-1.4V		+/-3.0%	400mA
LDO19 (Gb)	0.7-1.4V		+/-3.0%	400mA
LDO_RTC	2.5V		+/-2.0%	10mA
BUF_1V2	1.2V		+/-5.0%	10mA

PAGE TITLE
SYSTEM POWER:PMU (2/3)

Apple Inc.

DRAWING NUMBER 051-00482
SIZE D
REVISION 8.0.0
BRANCH
PAGE 19 OF 53
SHEET 19 OF 81

NOTICE OF PROPRIETARY PROPERTY:
THE INFORMATION CONTAINED HEREIN IS THE PROPRIETARY PROPERTY OF APPLE INC.
THE POSESSOR AGREES TO THE FOLLOWING:
I TO MAINTAIN THIS DOCUMENT IN CONFIDENCE
II NOT TO REPRODUCE OR COPY IT
III NOT TO REVEAL OR PUBLISH IT IN WHOLE OR PART
IV ALL RIGHTS RESERVED

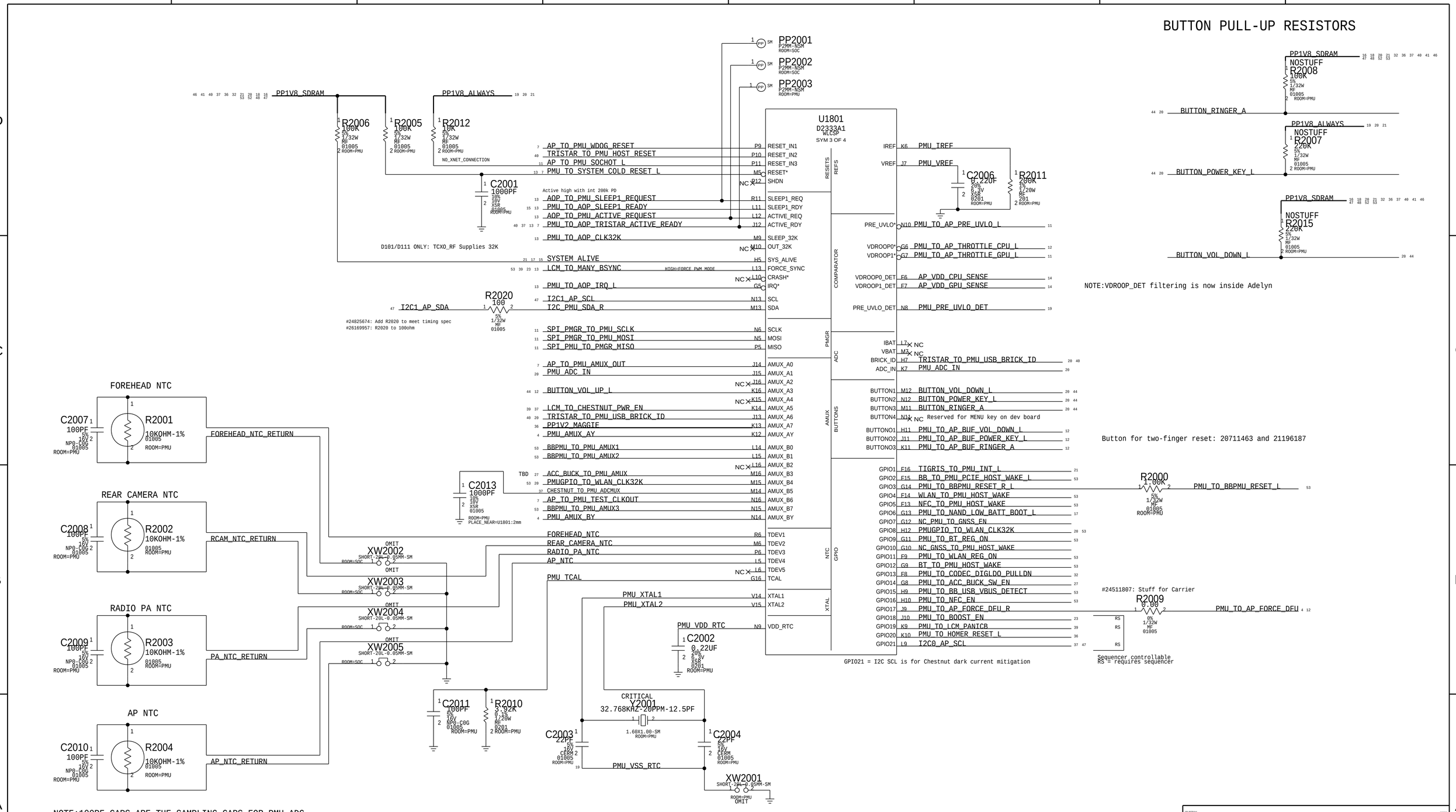

PAGE TITLE

SYSTEM POWER:PMU (3/3)

Apple Inc.

DRAWING NUMBER 051-00482 SIZE D

REVISION 8.0.0

BRANCH

PAGE 20 OF 53

SHEET 20 OF 81

NOTICE OF PROPRIETARY PROPERTY:

THE INFORMATION CONTAINED HEREIN IS THE PROPRIETARY PROPERTY OF APPLE INC.
THE POSESSOR AGREES TO THE FOLLOWING:
I TO MAINTAIN THIS DOCUMENT IN CONFIDENCE
II NOT TO REPRODUCE OR COPY IT
III NOT TO REVEAL OR PUBLISH IT IN WHOLE OR PART
IV ALL RIGHTS RESERVED

TIGRIS CHARGER

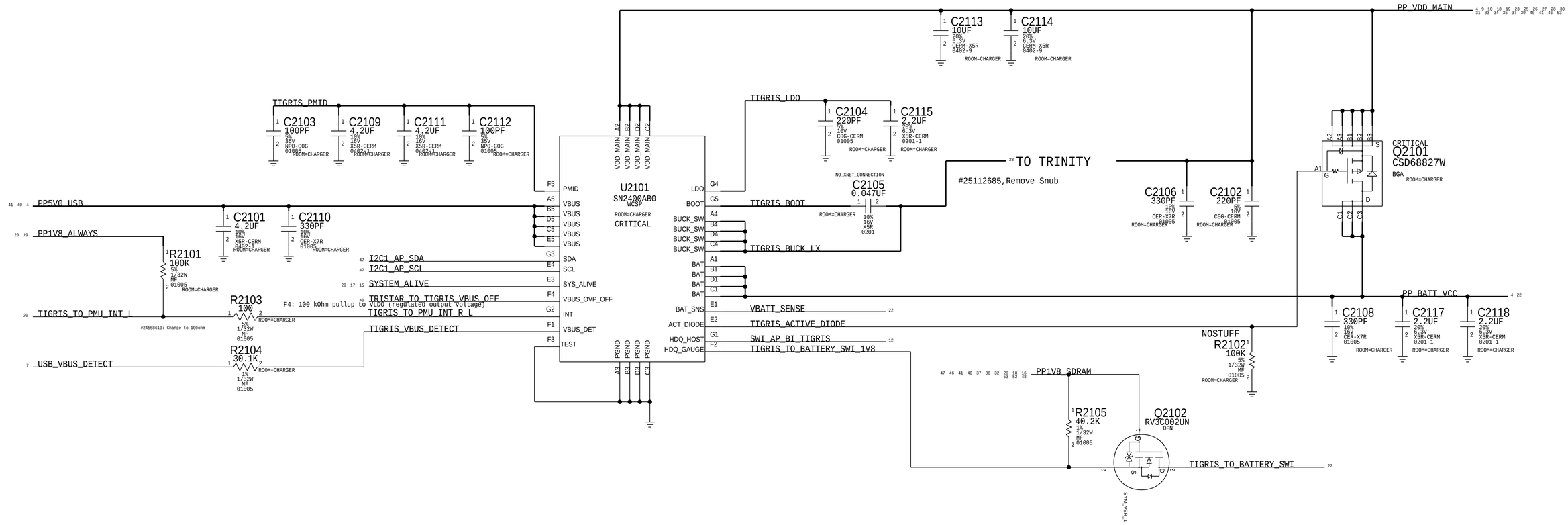

PAGE TITLE

SYSTEM POWER:CHARGER

Apple Inc.

DRAWING NUMBER 051-00482 SIZE D

REVISION 8.0.0

BRANCH

PAGE 21 OF 53

SHEET 21 OF 81

NOTICE OF PROPRIETARY PROPERTY:

THE INFORMATION CONTAINED HEREIN IS THE PROPRIETARY PROPERTY OF APPLE INC.
THE POSESSOR AGREES TO THE FOLLOWING:
I TO MAINTAIN THIS DOCUMENT IN CONFIDENCE
II NOT TO REPRODUCE OR COPY IT
III NOT TO REVEAL OR PUBLISH IT IN WHOLE OR PART
IV ALL RIGHTS RESERVED

BATTERY CONNECTOR

THIS ONE ON MLB ---> 516S00172 (matches d10 mlb MCO rev 27)

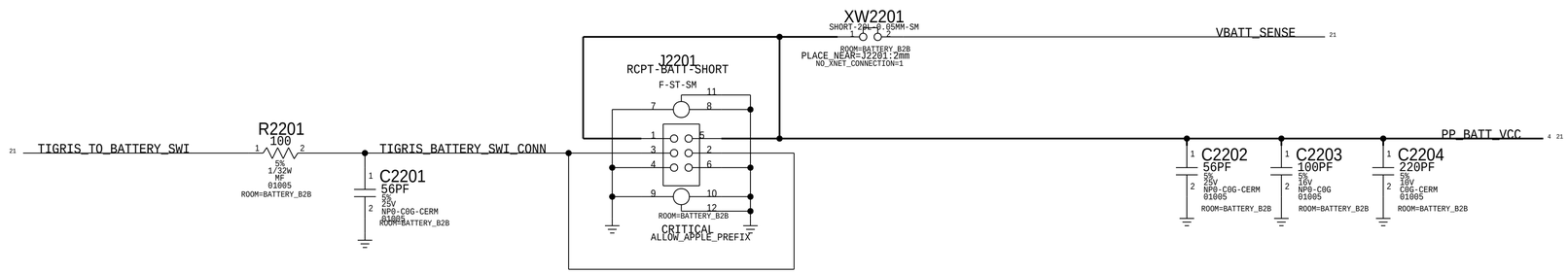

PAGE TITLE

SYSTEM POWER:BATTERY CONN

Apple Inc.

DRAWING NUMBER 051-00482

SIZE D

REVISION 8.0.0

BRANCH

PAGE 22 OF 53

SHEET 22 OF 81

NOTICE OF PROPRIETARY PROPERTY:

THE INFORMATION CONTAINED HEREIN IS THE PROPRIETARY PROPERTY OF APPLE INC.
THE POSESSOR AGREES TO THE FOLLOWING:

I TO MAINTAIN THIS DOCUMENT IN CONFIDENCE

II NOT TO REPRODUCE OR COPY IT

III NOT TO REVEAL OR PUBLISH IT IN WHOLE OR PART

IV ALL RIGHTS RESERVED

BOOST

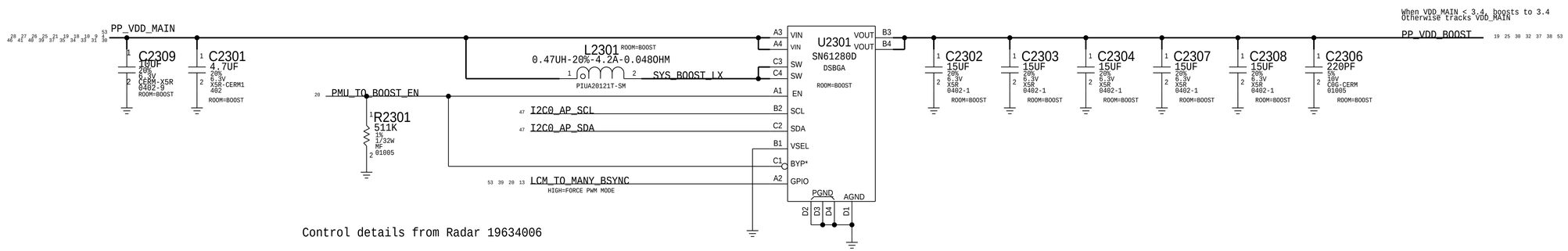

Control details from Radar 19634006

Mr Huy - Vietmobile.vn

PAGE TITLE
SYSTEM POWER:BOOST

Apple Inc.

DRAWING NUMBER 051-00482
SIZE D
REVISION 8.0.0
BRANCH
PAGE 23 OF 53
SHEET 23 OF 81

NOTICE OF PROPRIETARY PROPERTY:
THE INFORMATION CONTAINED HEREIN IS THE PROPRIETARY PROPERTY OF APPLE INC.
THE POSESSOR AGREES TO THE FOLLOWING:
I TO MAINTAIN THIS DOCUMENT IN CONFIDENCE
II NOT TO REPRODUCE OR COPY IT
III NOT TO REVEAL OR PUBLISH IT IN WHOLE OR PART
IV ALL RIGHTS RESERVED

CARBON - ACCEL & GYRO

INVENSENSE, MPU-6800: C2403=0.1UF

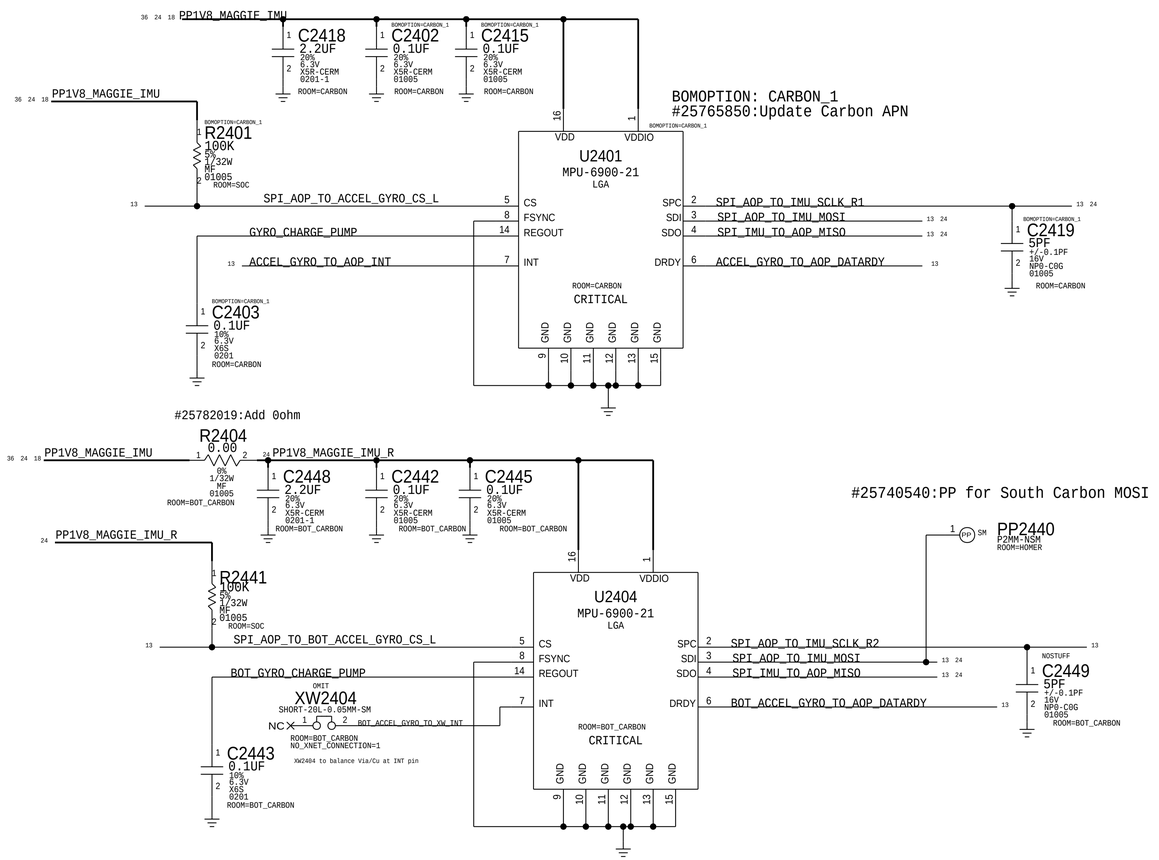

#25782019:Add 0ohm

MAGNESIUM - COMPASS

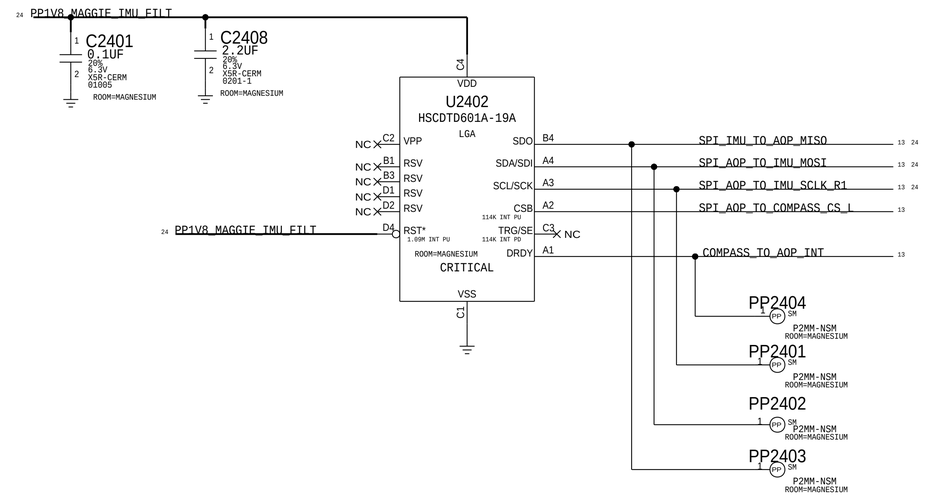

PHOSPHORUS

#24593845

BOSCH (APN:338S00188): nostuff C2420/C2421/C2422/C2423 and R2403 PU
ST (APN:338S00230): stuff C2420-C2423, C2420R2422 with 155S00017, stuff R2403 PU
C2420=4pF(131S0253),C2405=3pF(131S0251) per #25691124

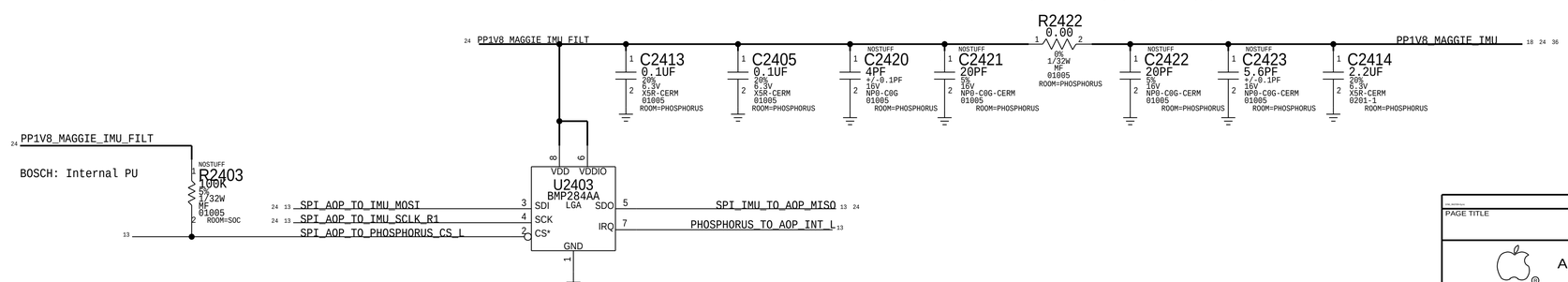

PAGE TITLE

SENSORS

Apple Inc.

DRAWING NUMBER 051-00482 SIZE D

REVISION 8.0.0

BRANCH

PAGE 24 OF 53

SHEET 24 OF 81

NOTICE OF PROPRIETARY PROPERTY:

THE INFORMATION CONTAINED HEREIN IS THE PROPRIETARY PROPERTY OF APPLE INC. THE POSESSOR AGREES TO THE FOLLOWING:

I TO MAINTAIN THIS DOCUMENT IN CONFIDENCE

II NOT TO REPRODUCE OR COPY IT

III NOT TO REVEAL OR PUBLISH IT IN WHOLE OR PART

IV ALL RIGHTS RESERVED

UTAH POWER

Scrub voltage selection

NOTE: OUTPUT IMPDEANCE MUST BE >0.005-OHM
IN ORDER TO MEET CAP ESR REQUIREMENT PER LDO SPEC.
VENDOR ALSO RECOMMENDS CIN = COUT FOR STABILITY

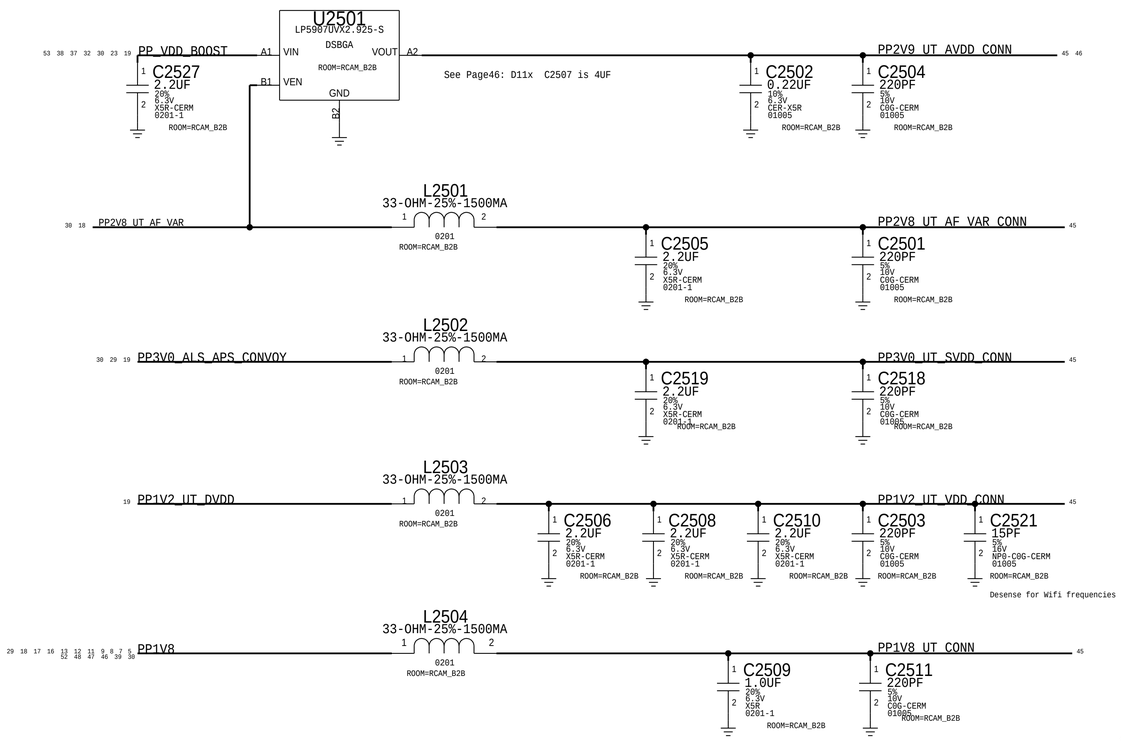

IO FILTERS

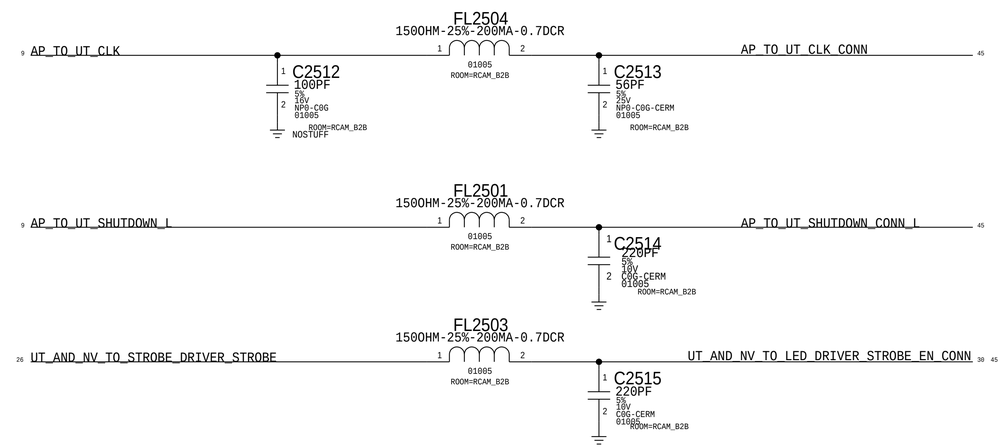

LPDP FILTERS

AC return path for LPDP which is referenced to GND and VDD_MAIN

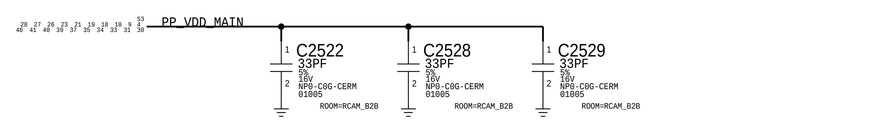

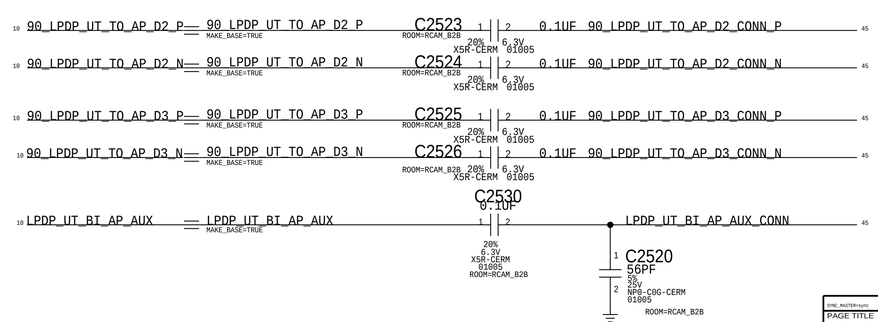

PAGE TITLE

B2B FILTERS: UTAH

Apple Inc.

DRAWING NUMBER 051-00482

SIZE D

REVISION 8.0.0

BRANCH

PAGE 25 OF 53

SHEET 25 OF 81

NOTICE OF PROPRIETARY PROPERTY:

THE INFORMATION CONTAINED HEREIN IS THE PROPRIETARY PROPERTY OF APPLE INC.
THE POSESSOR AGREES TO THE FOLLOWING:
I TO MAINTAIN THIS DOCUMENT IN CONFIDENCE
II NOT TO REPRODUCE OR COPY IT
III NOT TO REVEAL OR PUBLISH IT IN WHOLE OR PART
IV ALL RIGHTS RESERVED

STROBE DRIVERS INSIDE NEO SIP MODULE

D10/sip_neo

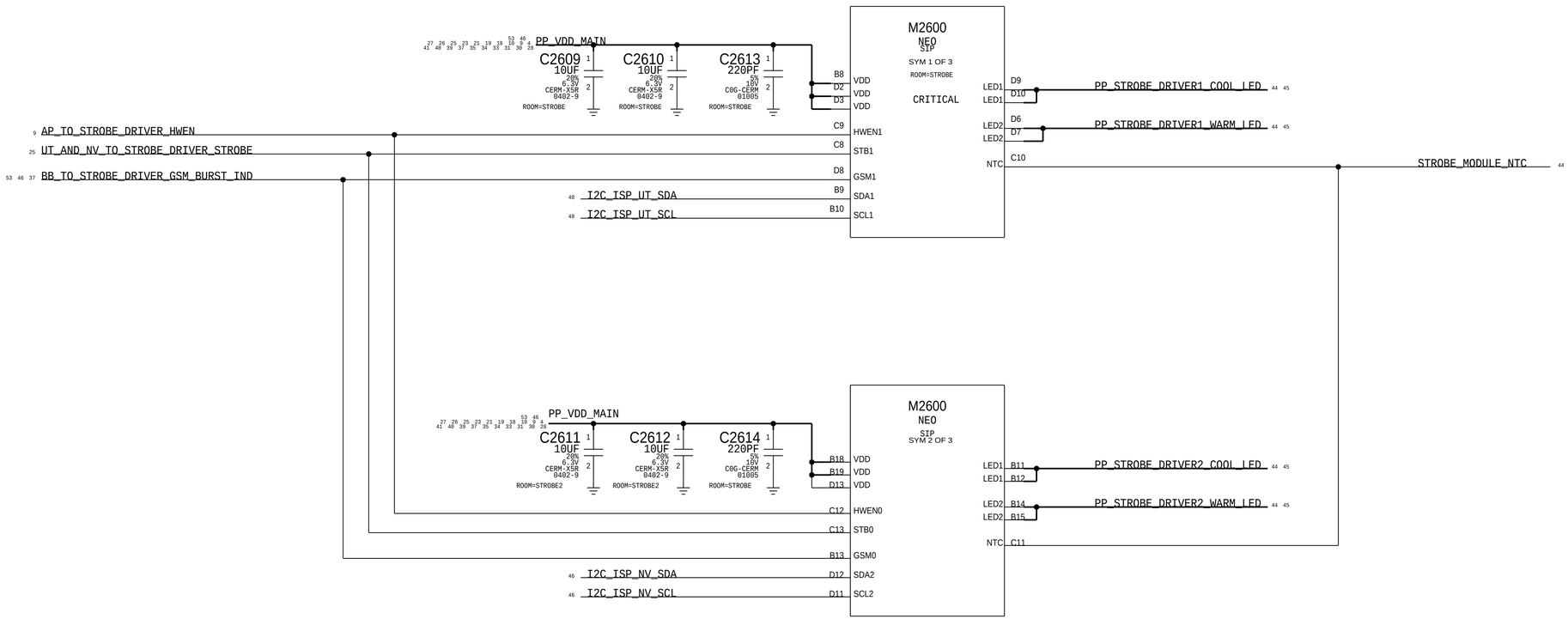

CDS_LIB=apple

PAGE TITLE

CAMERA:STROBE DRIVER

Apple Inc.

DRAWING NUMBER 051-00482

SIZE D

REVISION 8.0.0

BRANCH

PAGE 26 OF 53

SHEET 26 OF 81

NOTICE OF PROPRIETARY PROPERTY:

THE INFORMATION CONTAINED HEREIN IS THE PROPRIETARY PROPERTY OF APPLE INC.
THE POSESSOR AGREES TO THE FOLLOWING:
I TO MAINTAIN THIS DOCUMENT IN CONFIDENCE
II NOT TO REPRODUCE OR COPY IT
III NOT TO REVEAL OR PUBLISH IT IN WHOLE OR PART
IV ALL RIGHTS RESERVED

Mr Huy - Vietmobile.vn

ACCESSORY BUCK

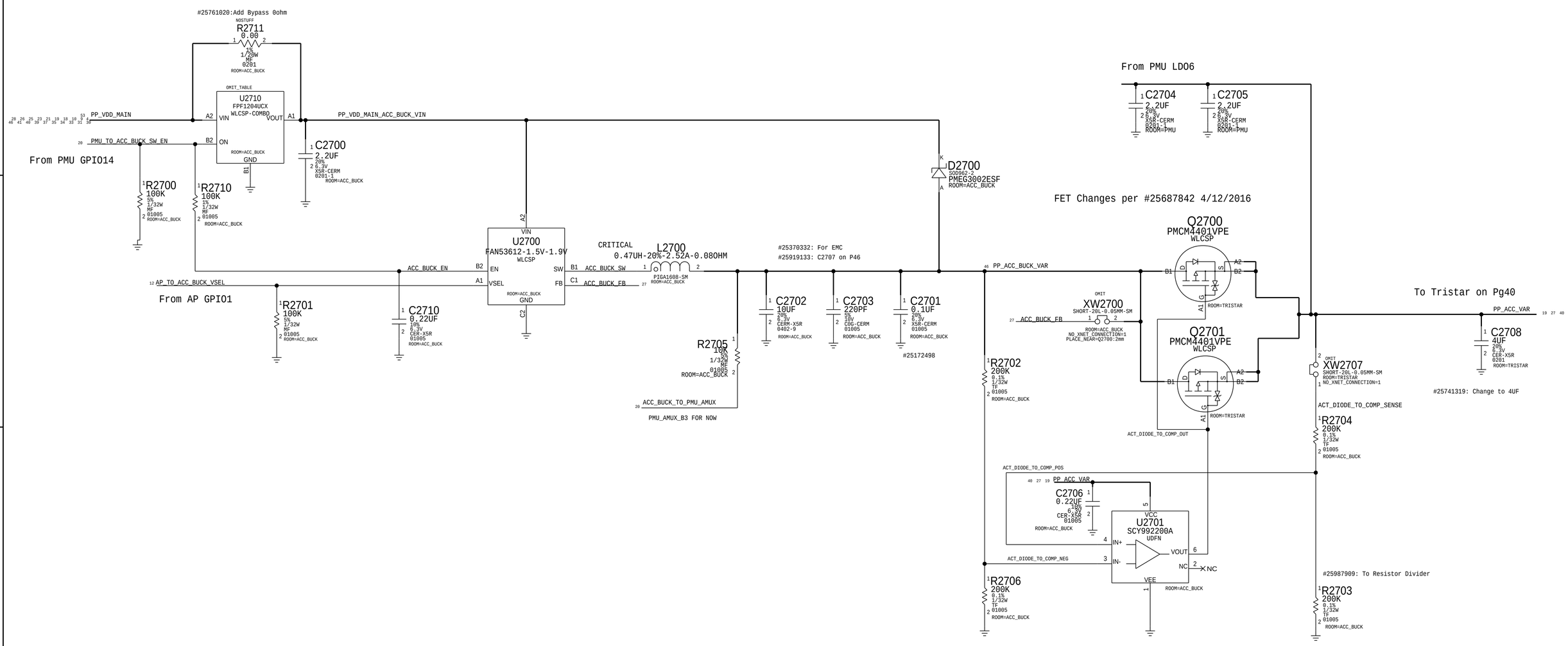

Mr Huy - Vietmobile.vn

PAGE TITLE	Accessory: Buck Circuit
	Apple Inc.
DRAWING NUMBER	051-00482
SIZE	D
REVISION	8.0.0
BRANCH	
PAGE	27 OF 53
SHEET	27 OF 81

NOTICE OF PROPRIETARY PROPERTY:
THE INFORMATION CONTAINED HEREIN IS THE PROPRIETARY PROPERTY OF APPLE INC.
THE POSESSOR AGREES TO THE FOLLOWING:
I TO MAINTAIN THIS DOCUMENT IN CONFIDENCE
II NOT TO REPRODUCE OR COPY IT
III NOT TO REVEAL OR PUBLISH IT IN WHOLE OR PART
IV ALL RIGHTS RESERVED

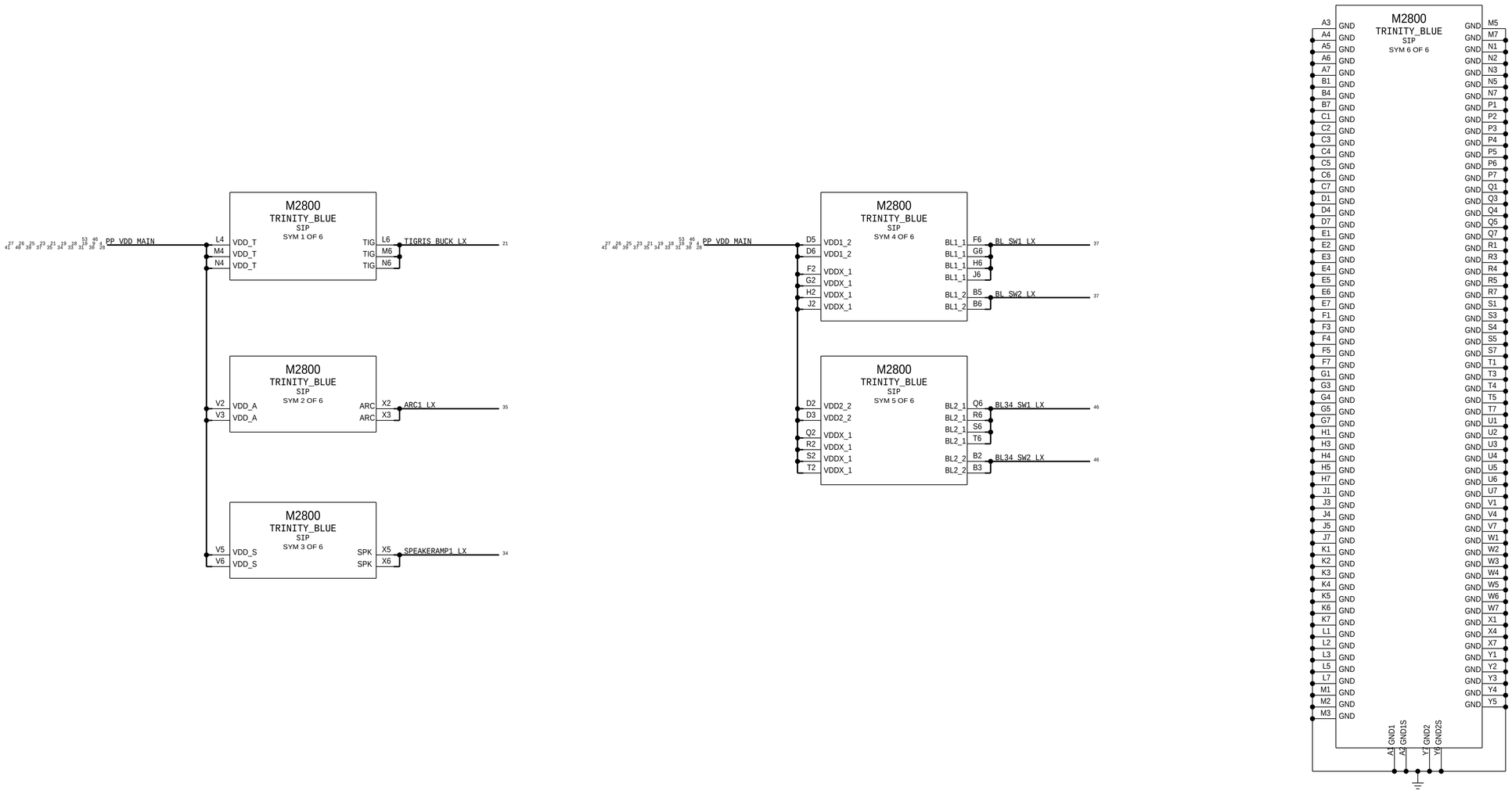

SYNC_MASTER:sync SYNC_DATE:05/17/2016

PAGE TITLE

TRINITY:FF SPECIFIC

Apple Inc.

DRAWING NUMBER 051-00482

SIZE D

REVISION 8.0.0

BRANCH

PAGE 28 OF 53

SHEET 28 OF 81

NOTICE OF PROPRIETARY PROPERTY:

THE INFORMATION CONTAINED HEREIN IS THE PROPRIETARY PROPERTY OF APPLE INC.
THE POSESSOR AGREES TO THE FOLLOWING:
I TO MAINTAIN THIS DOCUMENT IN CONFIDENCE
II NOT TO REPRODUCE OR COPY IT
III NOT TO REVEAL OR PUBLISH IT IN WHOLE OR PART
IV ALL RIGHTS RESERVED

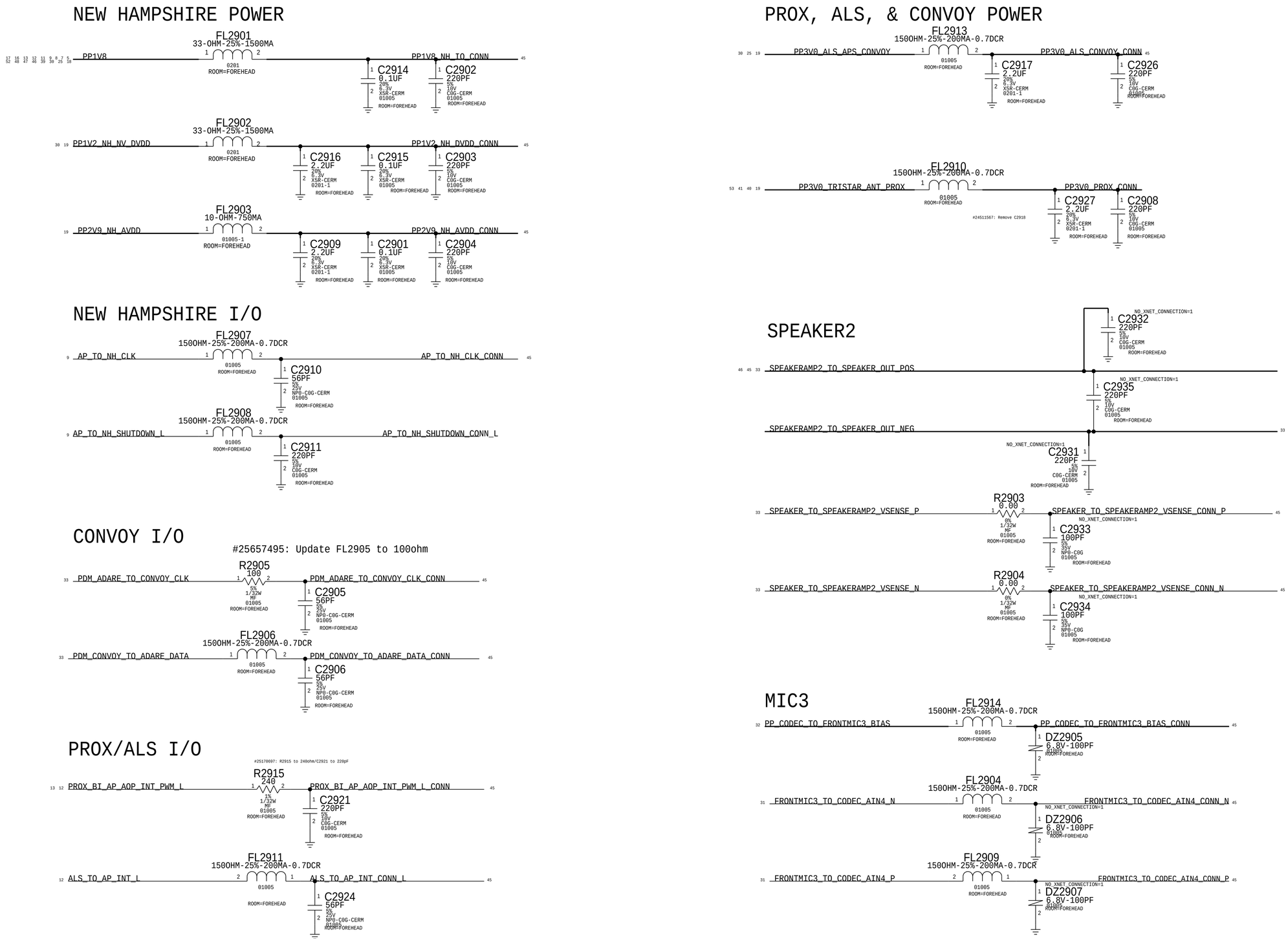

PAGE TITLE

B2B:FOREHEAD

Apple Inc.

DRAWING NUMBER	051-00482
SIZE	D
REVISION	8.0.0
BRANCH	
PAGE	29 OF 53
SHEET	29 OF 81

NOTICE OF PROPRIETARY PROPERTY:
THE INFORMATION CONTAINED HEREIN IS THE PROPRIETARY PROPERTY OF APPLE INC.
THE POSESSOR AGREES TO THE FOLLOWING:
I TO MAINTAIN THIS DOCUMENT IN CONFIDENCE
II NOT TO REPRODUCE OR COPY IT
III NOT TO REVEAL OR PUBLISH IT IN WHOLE OR PART
IV ALL RIGHTS RESERVED

NEVADA POWER

NOTE: OUTPUT IMPDEANCE MUST BE >0.005-OHM

IN ORDER TO MEET CAP ESR REQUIREMENT PER LDO SPEC.
VENDOR ALSO RECOMMENDS CIN = COUT FOR STABILITY

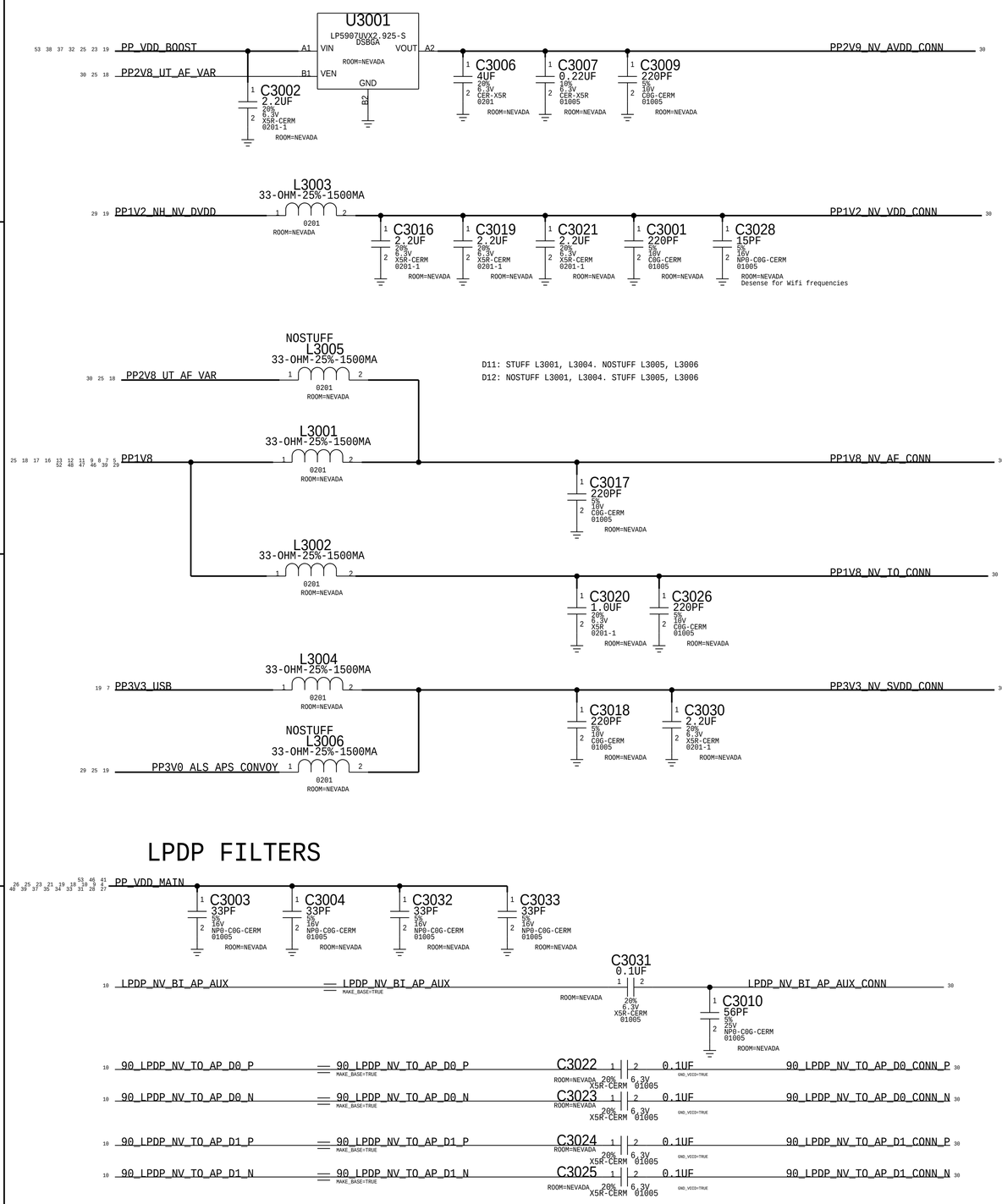

LPDP FILTERS

NEVADA CONNECTOR

THIS ONE ---> 516S00152 RCPT (USED ON MLB)
516S00151 PLUG

THIS PAGE UNIQUE TO LARGE FORM FACTOR
OTHER FORM FACTOR SPECIFIC PAGES:
4 - Mechanical
46 - FF Specific

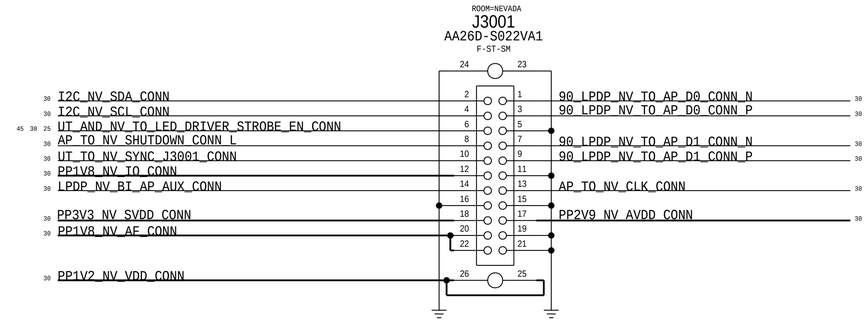

GPIO FILTERS

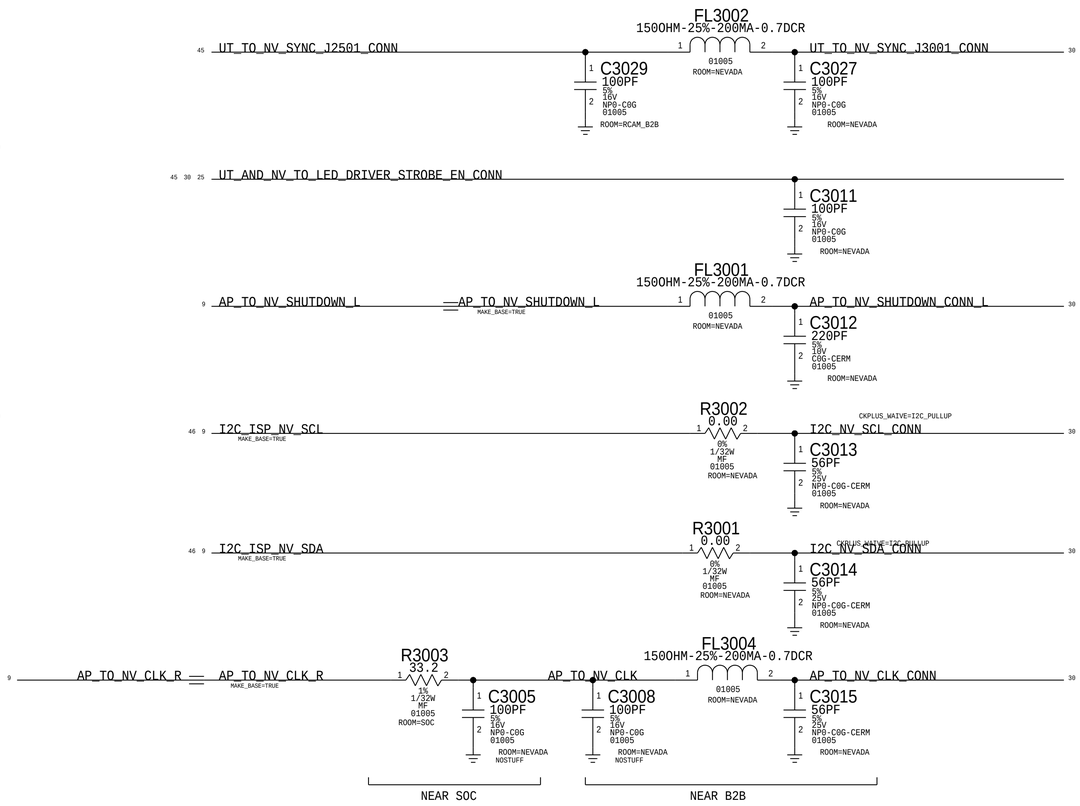

PAGE TITLE
B2B:NEVADA

Apple Inc.

DRAWING NUMBER 051-00482
SIZE D
REVISION 8.0.0
BRANCH
PAGE 30 OF 53
SHEET 30 OF 81

NOTICE OF PROPRIETARY PROPERTY:
THE INFORMATION CONTAINED HEREIN IS THE PROPRIETARY PROPERTY OF APPLE INC.
THE POSESSOR AGREES TO THE FOLLOWING:
I TO MAINTAIN THIS DOCUMENT IN CONFIDENCE
II NOT TO REPRODUCE OR COPY IT
III NOT TO REVEAL OR PUBLISH IT IN WHOLE OR PART
IV ALL RIGHTS RESERVED

CALTRA AUDIO CODEC (ANALOG INPUTS & OUTPUTS)

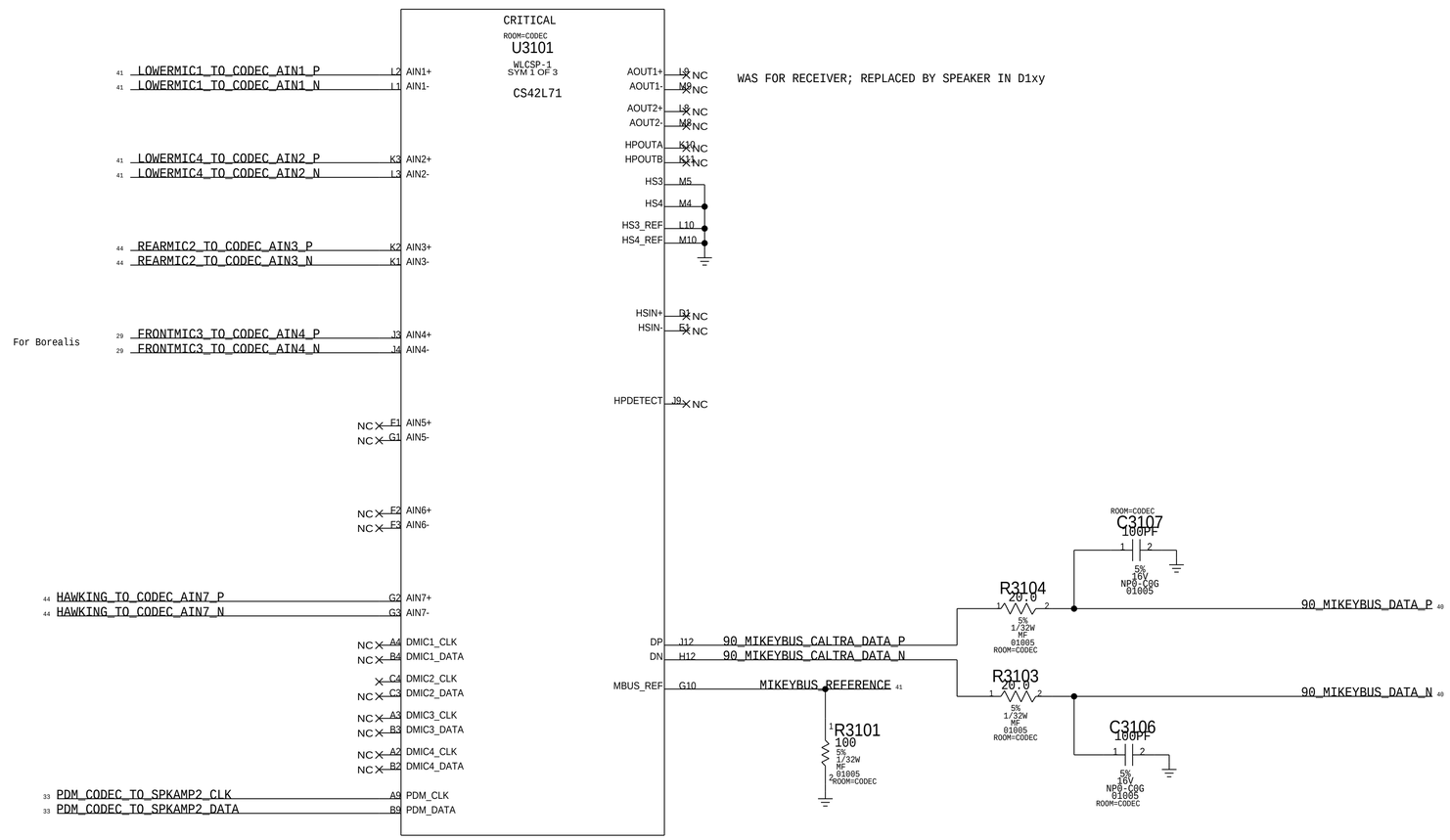

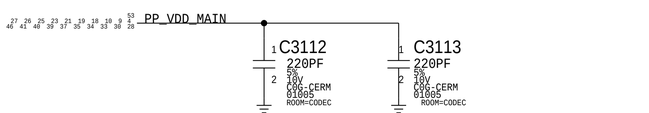

AC return path for Mikeybus which is referenced to GND and VDD_MAIN

Radar 21203307

Mr Huy - Vietmobile.vn

PAGE TITLE	AUDIO:CALTRA CODEC (1/2)
Apple Inc.	DRAWING NUMBER 051-00482 SIZE D
	REVISION 8.0.0
NOTICE OF PROPRIETARY PROPERTY:	BRANCH
THE INFORMATION CONTAINED HEREIN IS THE PROPRIETARY PROPERTY OF APPLE INC. THE POSESSOR AGREES TO THE FOLLOWING: I TO MAINTAIN THIS DOCUMENT IN CONFIDENCE II NOT TO REPRODUCE OR COPY IT III NOT TO REVEAL OR PUBLISH IT IN WHOLE OR PART IV ALL RIGHTS RESERVED	PAGE 31 OF 53
	SHEET 31 OF 81

CALTRA AUDIO CODEC (POWER & I/O)

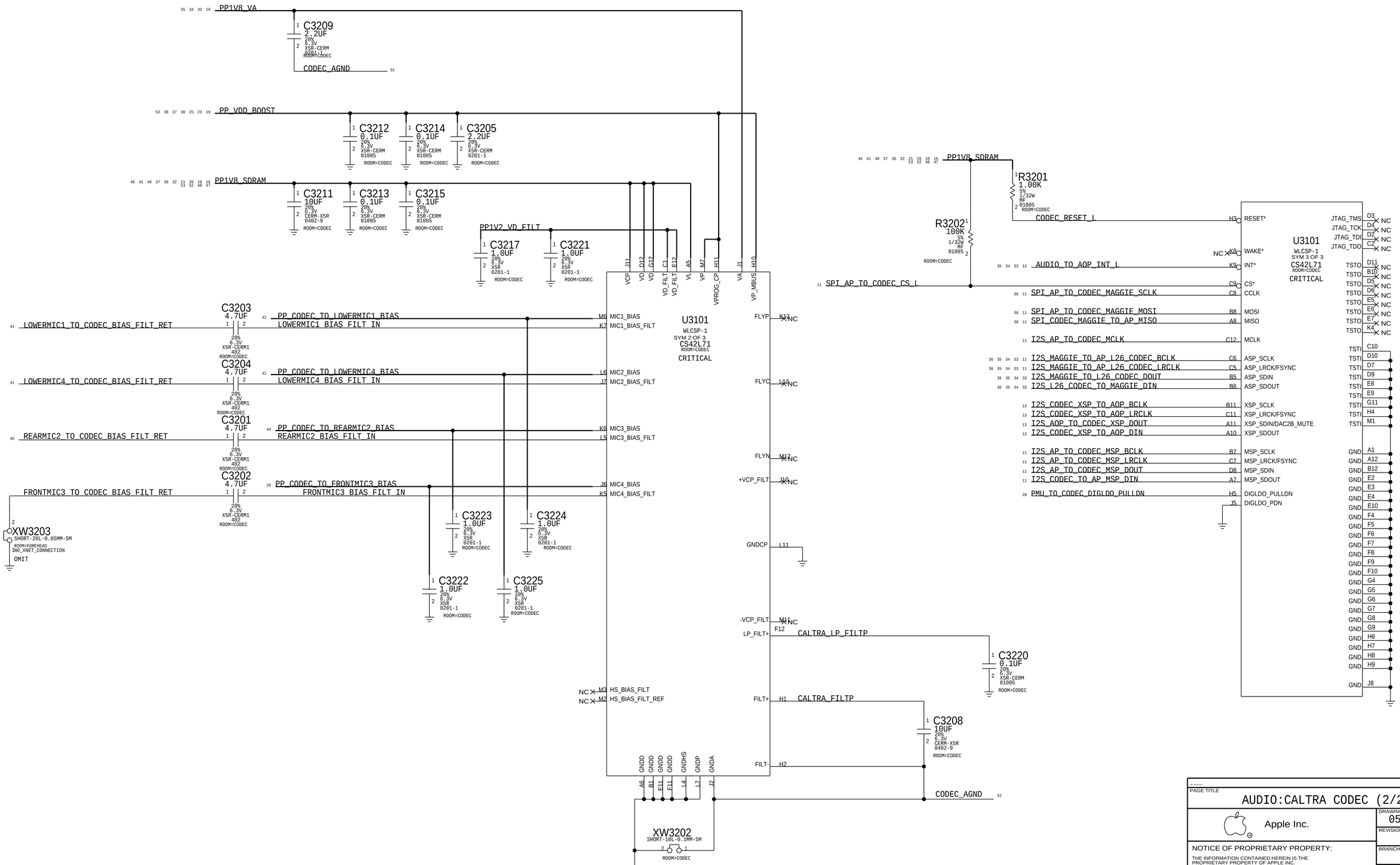

PAGE TITLE

AUDIO:CALTRA CODEC (2/2)

Apple Inc.

DRAWING NUMBER 051-00482 SIZE D

REVISION 8.0.0

BRANCH

PAGE 32 OF 53

SHEET 32 OF 81

NOTICE OF PROPRIETARY PROPERTY:

THE INFORMATION CONTAINED HEREIN IS THE PROPRIETARY PROPERTY OF APPLE INC.
THE POSESSOR AGREES TO THE FOLLOWING:

I TO MAINTAIN THIS DOCUMENT IN CONFIDENCE

II NOT TO REPRODUCE OR COPY IT

III NOT TO REVEAL OR PUBLISH IT IN WHOLE OR PART

IV ALL RIGHTS RESERVED

SPEAKER AMPLIFIER 2 (North)

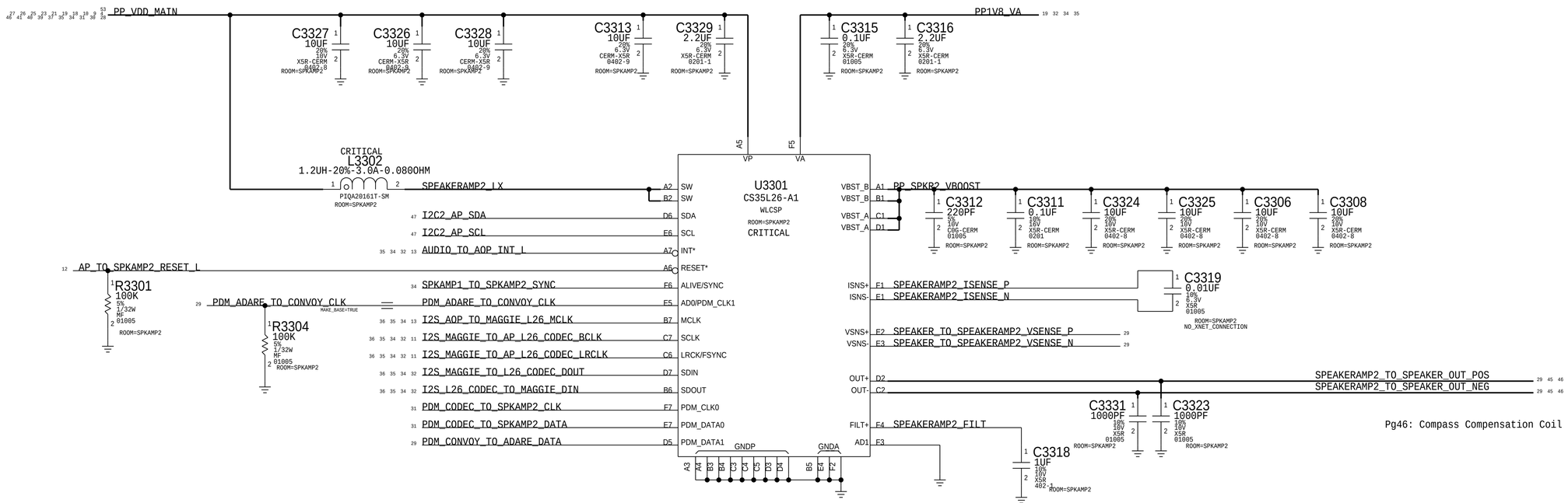

Pg46: Compass Compensation Coil

Mr Huy - Vietmobile.vn

PAGE TITLE
AUDIO:SPEAKER AMP 2

Apple Inc.

DRAWING NUMBER 051-00482 SIZE D
REVISION 8.0.0
BRANCH
PAGE 33 OF 53
SHEET 33 OF 81

NOTICE OF PROPRIETARY PROPERTY:
THE INFORMATION CONTAINED HEREIN IS THE PROPRIETARY PROPERTY OF APPLE INC.
THE POSESSOR AGREES TO THE FOLLOWING:
I TO MAINTAIN THIS DOCUMENT IN CONFIDENCE
II NOT TO REPRODUCE OR COPY IT
III NOT TO REVEAL OR PUBLISH IT IN WHOLE OR PART
IV ALL RIGHTS RESERVED

SPEAKER AMPLIFIER 1

(South)

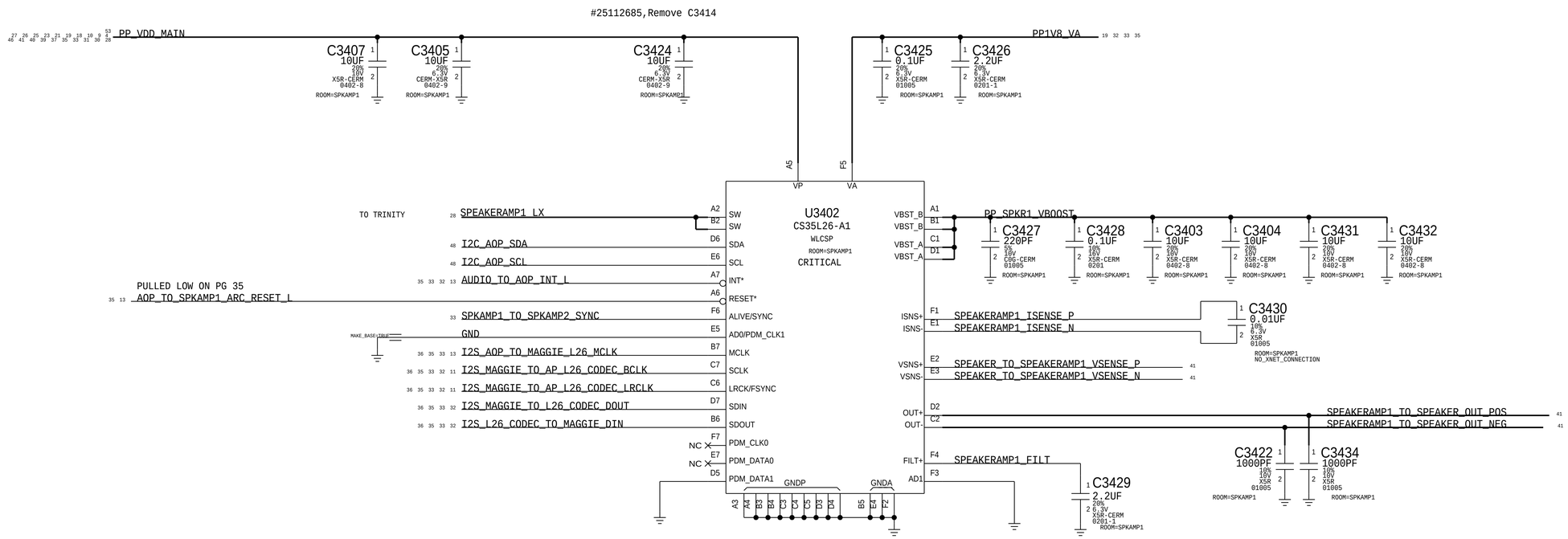

Mr Huy - Vietmobile.vn

PAGE TITLE	AUDIO:SPEAKER AMP 1
Apple Inc.	DRAWING NUMBER 051-00482 SIZE D
	REVISION 8.0.0
	BRANCH
	PAGE 34 OF 53
	SHEET 34 OF 81

NOTICE OF PROPRIETARY PROPERTY:
THE INFORMATION CONTAINED HEREIN IS THE PROPRIETARY PROPERTY OF APPLE INC.
THE POSESSOR AGREES TO THE FOLLOWING:
I TO MAINTAIN THIS DOCUMENT IN CONFIDENCE
II NOT TO REPRODUCE OR COPY IT
III NOT TO REVEAL OR PUBLISH IT IN WHOLE OR PART
IV ALL RIGHTS RESERVED

ARC DRIVER

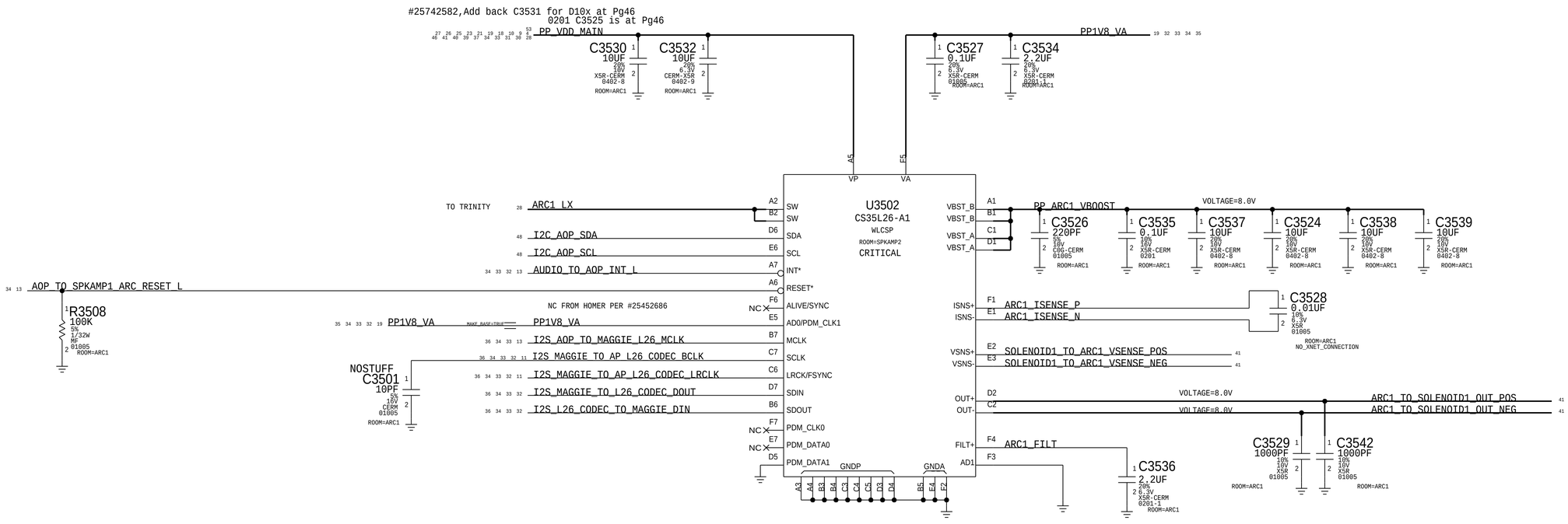

PAGE TITLE	ARC:DRIVER
Apple Inc.	DRAWING NUMBER 051-00482 SIZE D
	REVISION 8.0.0
NOTICE OF PROPRIETARY PROPERTY: THE INFORMATION CONTAINED HEREIN IS THE PROPRIETARY PROPERTY OF APPLE INC. THE POSESSOR AGREES TO THE FOLLOWING: I TO MAINTAIN THIS DOCUMENT IN CONFIDENCE II NOT TO REPRODUCE OR COPY IT III NOT TO REVEAL OR PUBLISH IT IN WHOLE OR PART IV ALL RIGHTS RESERVED	BRANCH
	PAGE 35 OF 53
	SHEET 35 OF 81

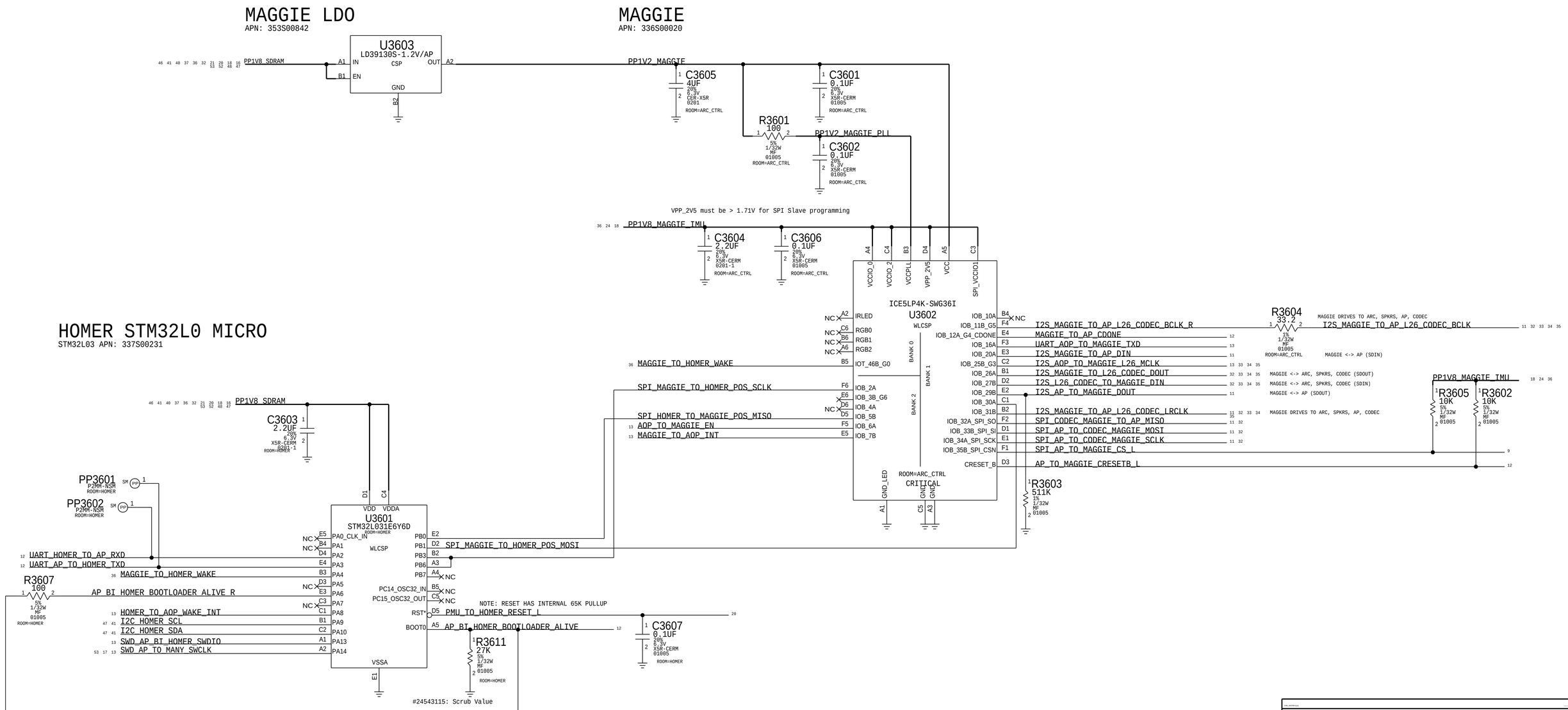

PAGE TITLE

ARC:MAGGIE

Apple Inc.

DRAWING NUMBER 051-00482 SIZE D

REVISION 8.0.0

BRANCH

PAGE 36 OF 53

SHEET 36 OF 81

NOTICE OF PROPRIETARY PROPERTY:

THE INFORMATION CONTAINED HEREIN IS THE PROPRIETARY PROPERTY OF APPLE INC.
THE POSESSOR AGREES TO THE FOLLOWING:
I TO MAINTAIN THIS DOCUMENT IN CONFIDENCE
II NOT TO REPRODUCE OR COPY IT
III NOT TO REVEAL OR PUBLISH IT IN WHOLE OR PART
IV ALL RIGHTS RESERVED

DISPLAY & TOUCH - POWER SUPPLIES

CHESTNUT DISPLAY PMU

APN:338S1172

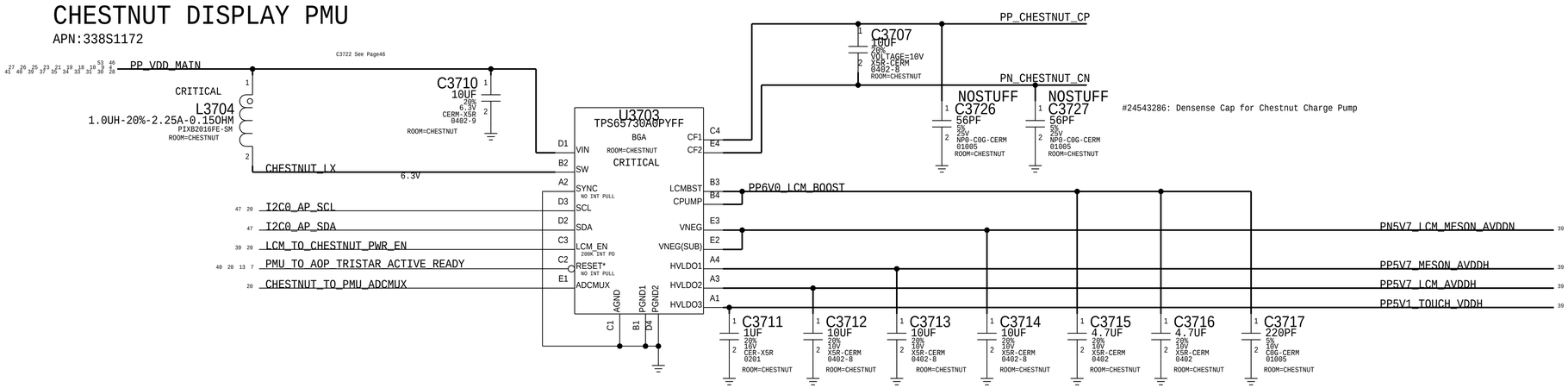

LED BACKLIGHT DRIVER - 6LED

APN:353s00640

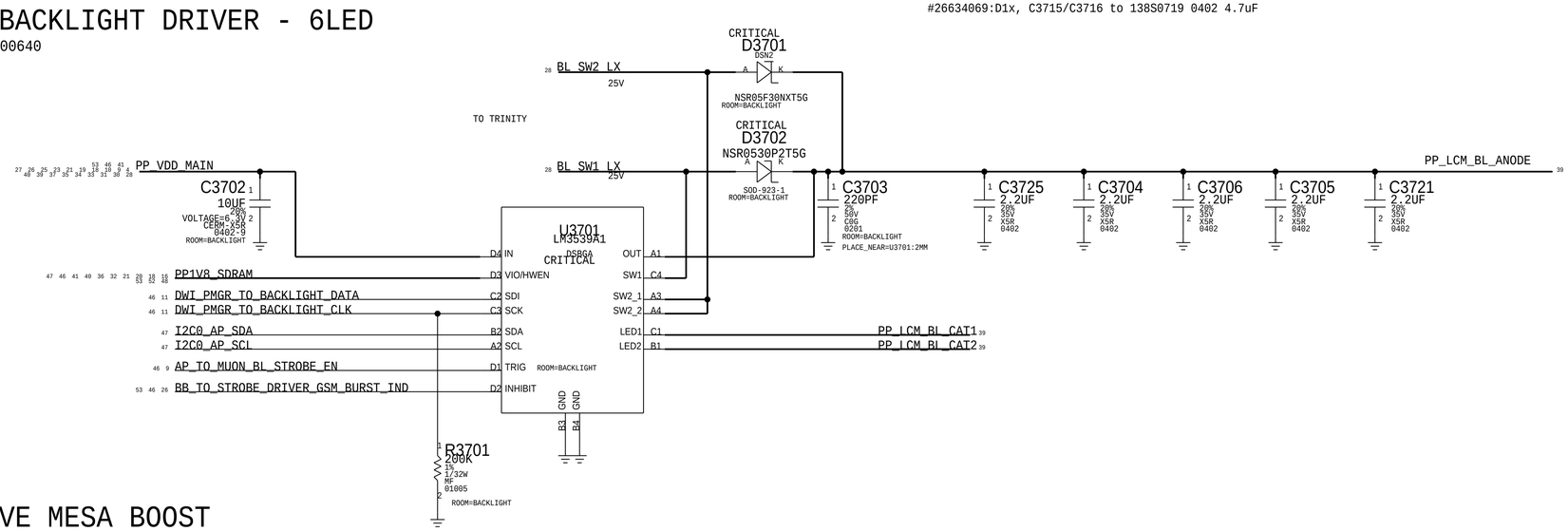

MOJAVE MESA BOOST

APN:353S00671

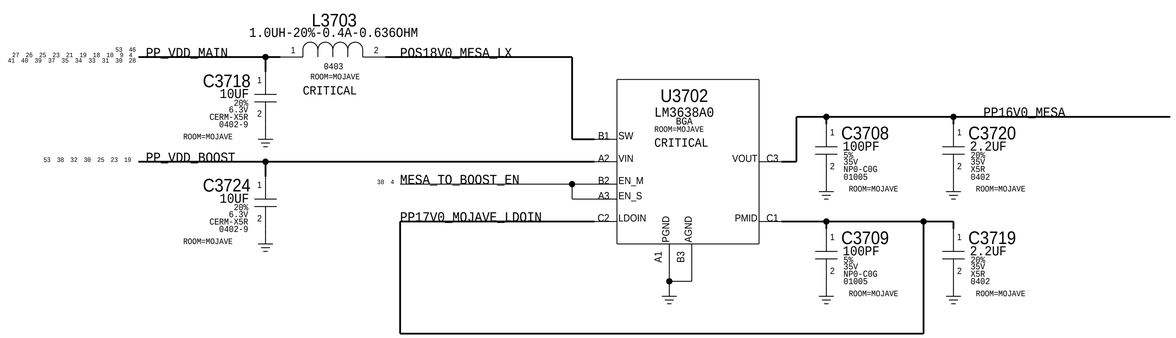

PAGE TITLE

DISPLAY & MESA:POWER

Apple Inc.

DRAWING NUMBER 051-00482

SIZE D

REVISION 8.0.0

BRANCH

PAGE 37 OF 53

SHEET 37 OF 81

NOTICE OF PROPRIETARY PROPERTY:

THE INFORMATION CONTAINED HEREIN IS THE PROPRIETARY PROPERTY OF APPLE INC.
THE POSESSOR AGREES TO THE FOLLOWING:
I TO MAINTAIN THIS DOCUMENT IN CONFIDENCE
II NOT TO REPRODUCE OR COPY IT
III NOT TO REVEAL OR PUBLISH IT IN WHOLE OR PART
IV ALL RIGHTS RESERVED

MESA POWER

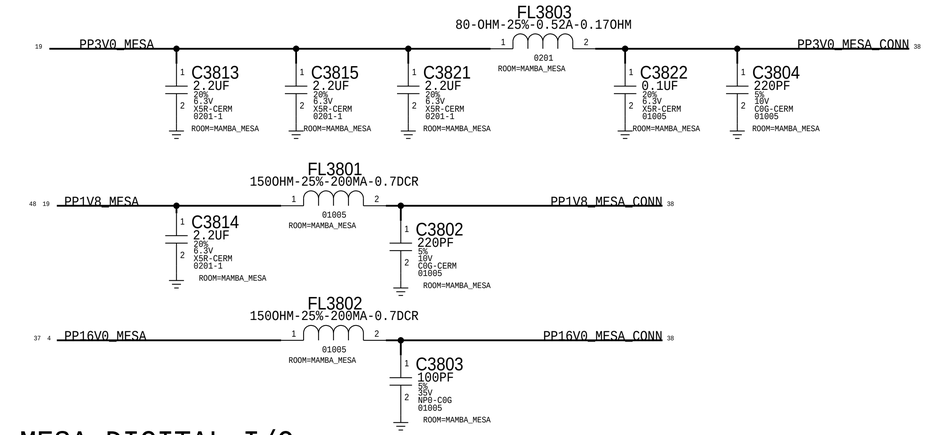

MESA DIGITAL I/O

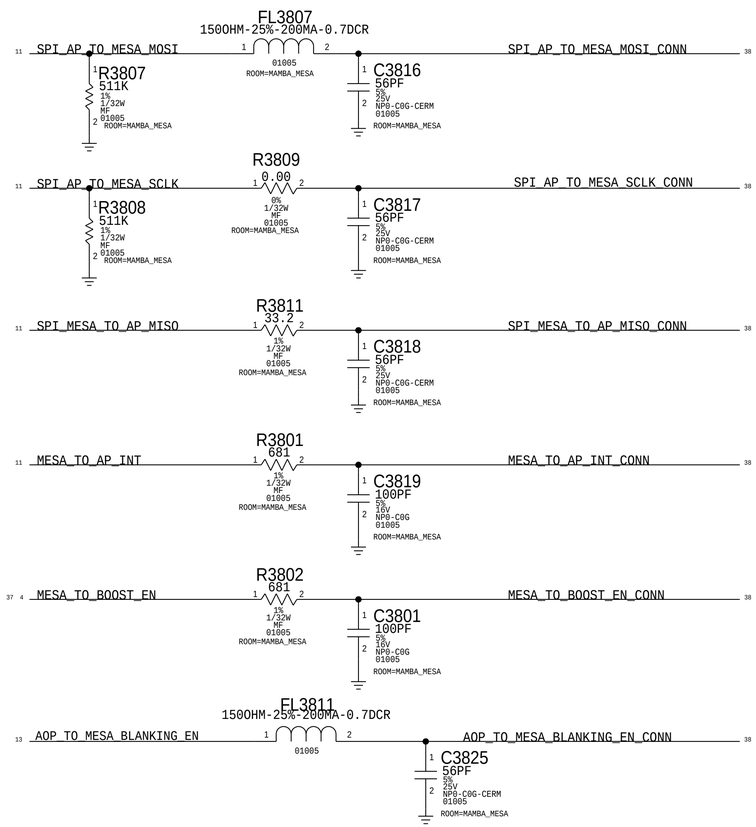

MAMBA AND MESA CONNECTOR

MLB: 516S00141 (RCPT)
FLEX: 516S00142 (PLUG)

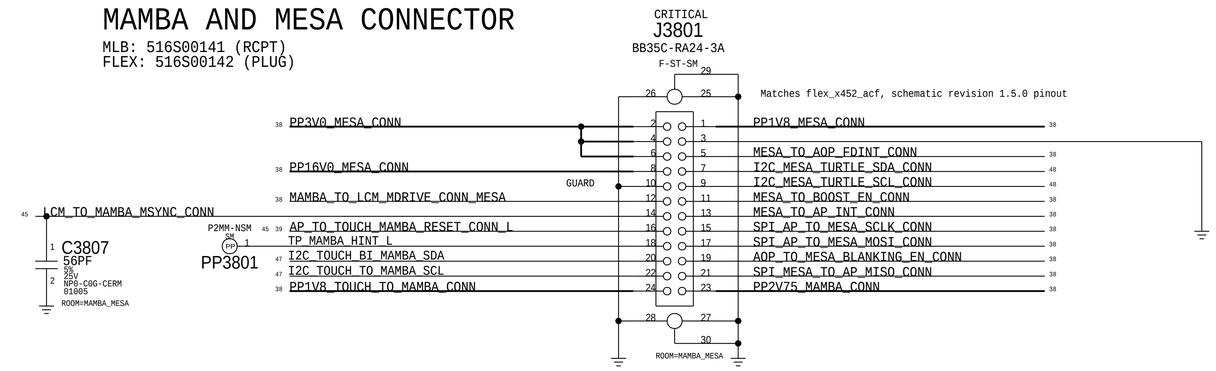

MAMBA POWER

NOTE: OUTPUT IMPDEANCE MUST BE >0.005-OHM
IN ORDER TO MEET CAP ESR REQUIREMENT PER LDO SPEC.
VENDOR ALSO RECOMMENDS CIN 2 COUT FOR STABILITY

TI:353S00576
ST:353S00932

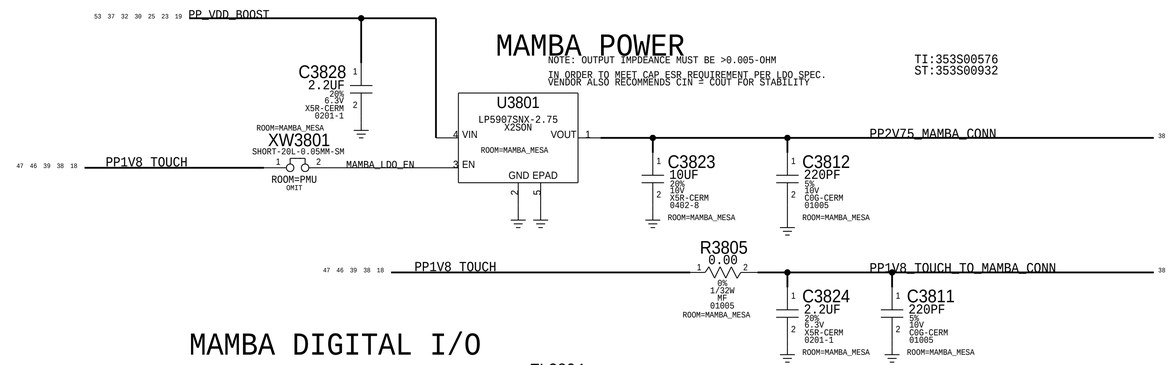

MAMBA DIGITAL I/O

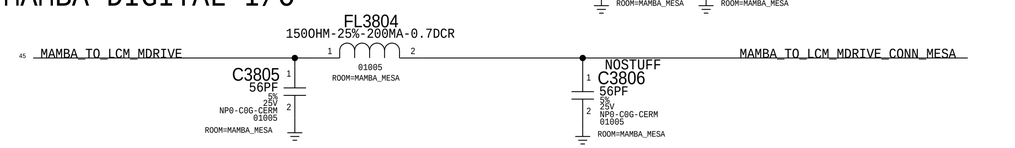

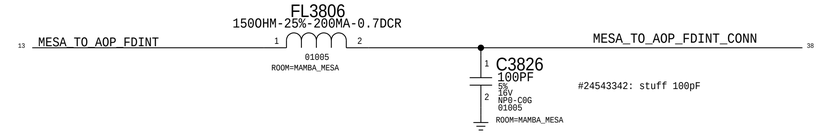

PAGE TITLE	B2B:ORB & MESA
Apple Inc.	DRAWING NUMBER 051-00482 SIZE D
	REVISION 8.0.0
NOTICE OF PROPRIETARY PROPERTY: THE INFORMATION CONTAINED HEREIN IS THE PROPRIETARY PROPERTY OF APPLE INC. THE POSESSOR AGREES TO THE FOLLOWING: I TO MAINTAIN THIS DOCUMENT IN CONFIDENCE II NOT TO REPRODUCE OR COPY IT III NOT TO REVEAL OR PUBLISH IT IN WHOLE OR PART IV ALL RIGHTS RESERVED	BRANCH
	PAGE 38 OF 53
	SHEET 38 OF 81

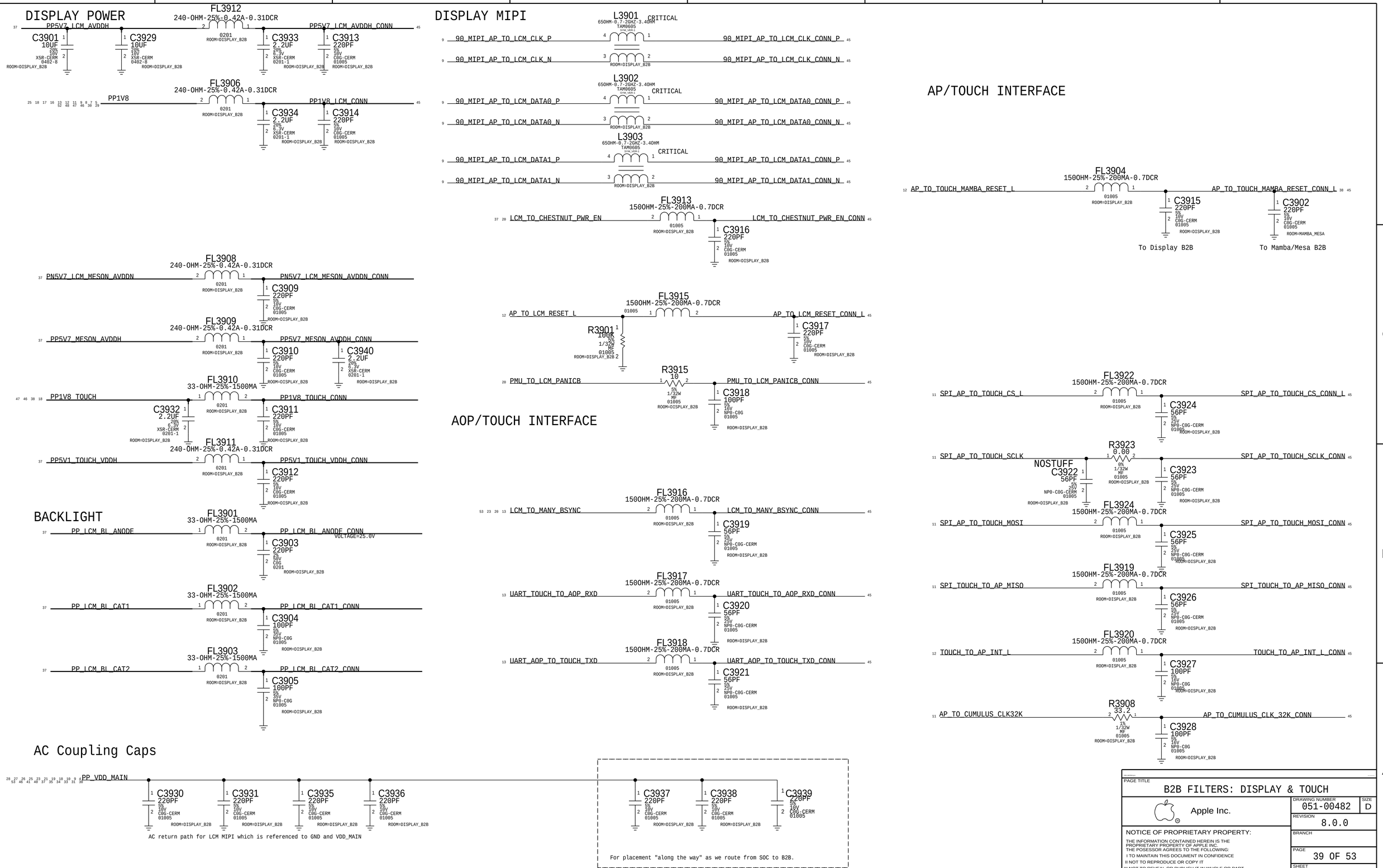
DISPLAY POWER
PP5V7_LCM_AVDDH
FL3912
240-OHM-25%-0.42A-0.31DCR
PP5V7_LCM_AVDDH_CONN
C3901 10UF 20% 10V X5R-CERM 0402-8 ROOM=DISPLAY_B2B
C3929 10UF 20% 10V X5R-CERM 0402-8 ROOM=DISPLAY_B2B
C3933 2.2UF 20% 6.3V X5R-CERM 0201-1 ROOM=DISPLAY_B2B
C3913 220PF 5% 10V C0G-CERM 01005 ROOM=DISPLAY_B2B
FL3906
240-OHM-25%-0.42A-0.31DCR
PP1V8
PP1V8_LCM_CONN
C3934 2.2UF 20% 6.3V X5R-CERM 0201-1 ROOM=DISPLAY_B2B
C3914 220PF 5% 10V C0G-CERM 01005 ROOM=DISPLAY_B2B
FL3908
240-OHM-25%-0.42A-0.31DCR
PN5V7_LCM_MESON_AVDDN
PN5V7_LCM_MESON_AVDDN_CONN
C3909 220PF 5% 10V C0G-CERM 01005 ROOM=DISPLAY_B2B
FL3909
240-OHM-25%-0.42A-0.31DCR
PP5V7_MESON_AVDDH
PP5V7_MESON_AVDDH_CONN
C3910 220PF 5% 10V C0G-CERM 01005 ROOM=DISPLAY_B2B
C3940 2.2UF 20% 6.3V X5R-CERM 0201-1 ROOM=DISPLAY_B2B
FL3910
33-OHM-25%-1500MA
PP1V8_TOUCH
PP1V8_TOUCH_CONN
C3932 2.2UF 20% 6.3V X5R-CERM 0201-1 ROOM=DISPLAY_B2B
C3911 220PF 5% 10V C0G-CERM 01005 ROOM=DISPLAY_B2B
FL3911
240-OHM-25%-0.42A-0.31DCR
PP5V1_TOUCH_VDDH
PP5V1_TOUCH_VDDH_CONN
C3912 220PF 5% 10V C0G-CERM 01005 ROOM=DISPLAY_B2B
BACKLIGHT
FL3901
33-OHM-25%-1500MA
PP_LCM_BL_ANODE
PP_LCM_BL_ANODE_CONN
VOLTAGE=25.0V
C3903 220PF 2% 50V C0G 0201 ROOM=DISPLAY_B2B
FL3902
33-OHM-25%-1500MA
PP_LCM_BL_CAT1
PP_LCM_BL_CAT1_CONN
C3904 100PF 5% 35V NP0-C0G 01005 ROOM=DISPLAY_B2B
FL3903
33-OHM-25%-1500MA
PP_LCM_BL_CAT2
PP_LCM_BL_CAT2_CONN
C3905 100PF 5% 35V NP0-C0G 01005 ROOM=DISPLAY_B2B
AC Coupling Caps
PP_VDD_MAIN
C3930 220PF 5% 10V C0G-CERM 01005 ROOM=DISPLAY_B2B
C3931 220PF 5% 10V C0G-CERM 01005 ROOM=DISPLAY_B2B
C3935 220PF 5% 10V C0G-CERM 01005 ROOM=DISPLAY_B2B
C3936 220PF 5% 10V C0G-CERM 01005 ROOM=DISPLAY_B2B
AC return path for LCM MIPI which is referenced to GND and VDD_MAIN
C3937 220PF 5% 10V C0G-CERM 01005 ROOM=DISPLAY_B2B
C3938 220PF 5% 10V C0G-CERM 01005 ROOM=DISPLAY_B2B
C3939 220PF 5% 10V C0G-CERM 01005
For placement "along the way" as we route from SOC to B2B.
DISPLAY MIPI
L3901 CRITICAL
650HM-0.7-2GHZ-3.4OHM TAM0605
90_MIPI_AP_TO_LCM_CLK_P
90_MIPI_AP_TO_LCM_CLK_CONN_P
90_MIPI_AP_TO_LCM_CLK_N
90_MIPI_AP_TO_LCM_CLK_CONN_N
L3902 CRITICAL
650HM-0.7-2GHZ-3.4OHM TAM0605
90_MIPI_AP_TO_LCM_DATA0_P
90_MIPI_AP_TO_LCM_DATA0_CONN_P
90_MIPI_AP_TO_LCM_DATA0_N
90_MIPI_AP_TO_LCM_DATA0_CONN_N
L3903 CRITICAL
650HM-0.7-2GHZ-3.4OHM TAM0605
90_MIPI_AP_TO_LCM_DATA1_P
90_MIPI_AP_TO_LCM_DATA1_CONN_P
90_MIPI_AP_TO_LCM_DATA1_N
90_MIPI_AP_TO_LCM_DATA1_CONN_N
FL3913
150OHM-25%-200MA-0.7DCR
LCM_TO_CHESTNUT_PWR_EN
LCM_TO_CHESTNUT_PWR_EN_CONN
C3916 220PF 5% 10V C0G-CERM 01005 ROOM=DISPLAY_B2B
FL3915
150OHM-25%-200MA-0.7DCR
AP_TO_LCM_RESET_L
AP_TO_LCM_RESET_CONN_L
R3901 100K 5% 1/32W MF 01005 ROOM=DISPLAY_B2B
C3917 220PF 5% 10V C0G-CERM 01005 ROOM=DISPLAY_B2B
R3915 10 5% 1/32W MF 01005 ROOM=DISPLAY_B2B
PMU_TO_LCM_PANICB
PMU_TO_LCM_PANICB_CONN
C3918 100PF 5% 10V NP0-C0G 01005 ROOM=DISPLAY_B2B
AOP/TOUCH INTERFACE
FL3916
150OHM-25%-200MA-0.7DCR
LCM_TO_MANY_BSYNC
LCM_TO_MANY_BSYNC_CONN
C3919 56PF 5% 25V NP0-C0G-CERM 01005 ROOM=DISPLAY_B2B
FL3917
150OHM-25%-200MA-0.7DCR
UART_TOUCH_TO_AOP_RXD
UART_TOUCH_TO_AOP_RXD_CONN
C3920 56PF 5% 25V NP0-C0G-CERM 01005 ROOM=DISPLAY_B2B
FL3918
150OHM-25%-200MA-0.7DCR
UART_AOP_TO_TOUCH_TXD
UART_AOP_TO_TOUCH_TXD_CONN
C3921 56PF 5% 25V NP0-C0G-CERM 01005 ROOM=DISPLAY_B2B
AP/TOUCH INTERFACE
FL3904
150OHM-25%-200MA-0.7DCR
AP_TO_TOUCH_MAMBA_RESET_L
AP_TO_TOUCH_MAMBA_RESET_CONN_L
C3915 220PF 5% 10V C0G-CERM 01005 ROOM=DISPLAY_B2B
C3902 220PF 5% 10V C0G-CERM 01005 ROOM=MAMBA_MESA
To Display B2B
To Mamba/Mesa B2B
FL3922
150OHM-25%-200MA-0.7DCR
SPI_AP_TO_TOUCH_CS_L
SPI_AP_TO_TOUCH_CS_CONN_L
C3924 56PF 5% 25V NP0-C0G-CERM 01005 ROOM=DISPLAY_B2B
R3923 0.00 0% 1/32W MF 01005 ROOM=DISPLAY_B2B
SPI_AP_TO_TOUCH_SCLK
SPI_AP_TO_TOUCH_SCLK_CONN
NOSTUFF
C3922 56PF 5% 25V NP0-C0G-CERM 01005 ROOM=DISPLAY_B2B
C3923 56PF 5% 25V NP0-C0G-CERM 01005 ROOM=DISPLAY_B2B
FL3924
150OHM-25%-200MA-0.7DCR
SPI_AP_TO_TOUCH_MOSI
SPI_AP_TO_TOUCH_MOSI_CONN
C3925 56PF 5% 25V NP0-C0G-CERM 01005 ROOM=DISPLAY_B2B
FL3919
150OHM-25%-200MA-0.7DCR
SPI_TOUCH_TO_AP_MISO
SPI_TOUCH_TO_AP_MISO_CONN
C3926 56PF 5% 25V NP0-C0G-CERM 01005 ROOM=DISPLAY_B2B
FL3920
150OHM-25%-200MA-0.7DCR
TOUCH_TO_AP_INT_L
TOUCH_TO_AP_INT_L_CONN
C3927 100PF 5% 10V NP0-C0G 01005 ROOM=DISPLAY_B2B
R3908 33.2 1% 1/32W MF 01005 ROOM=DISPLAY_B2B
AP_TO_CUMULUS_CLK32K
AP_TO_CUMULUS_CLK_32K_CONN
C3928 100PF 5% 10V NP0-C0G 01005 ROOM=DISPLAY_B2B
PAGE TITLE
B2B FILTERS: DISPLAY & TOUCH
Apple Inc.
DRAWING NUMBER 051-00482
SIZE D
REVISION 8.0.0
BRANCH
PAGE 39 OF 53
SHEET 39 OF 81
NOTICE OF PROPRIETARY PROPERTY:
THE INFORMATION CONTAINED HEREIN IS THE PROPRIETARY PROPERTY OF APPLE INC.
THE POSESSOR AGREES TO THE FOLLOWING:
I TO MAINTAIN THIS DOCUMENT IN CONFIDENCE
II NOT TO REPRODUCE OR COPY IT
III NOT TO REVEAL OR PUBLISH IT IN WHOLE OR PART
IV ALL RIGHTS RESERVED

TRISTAR 2

z=0.45mm

<rdar:/24285280> EVT: 343S00091 (P2:343S00078)

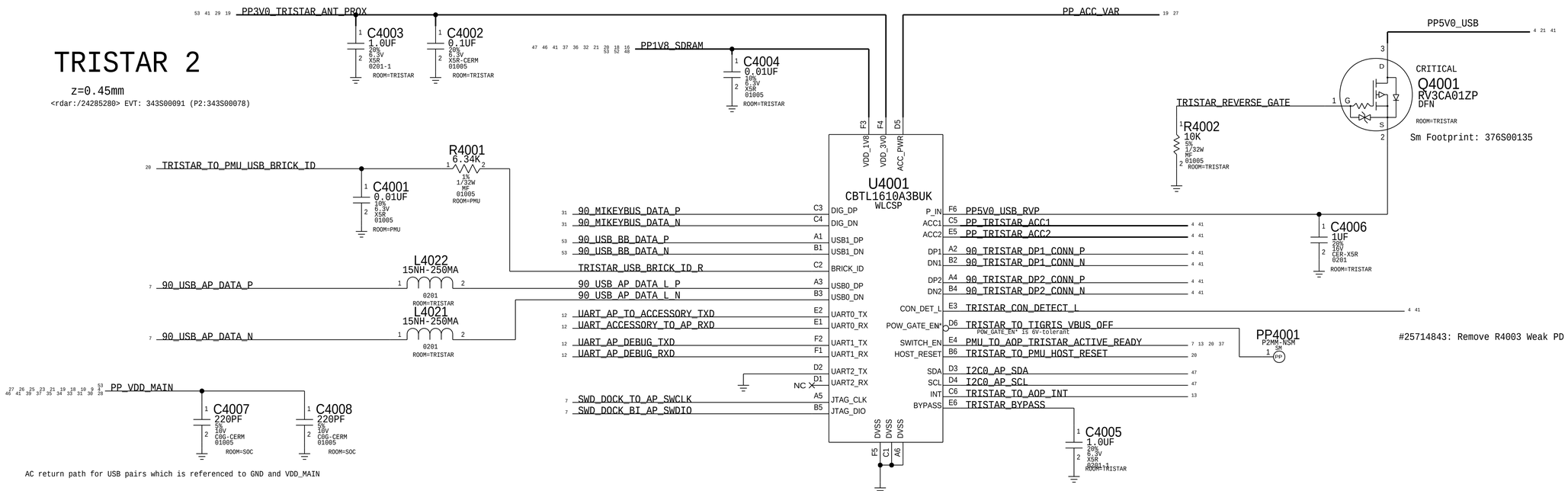

#25714843: Remove R4003 Weak PD

AC return path for USB pairs which is referenced to GND and VDD_MAIN

PAGE TITLE	TRISTAR 2
Apple Inc.	DRAWING NUMBER 051-00482 SIZE D
	REVISION 8.0.0
	BRANCH
	PAGE 40 OF 53
	SHEET 40 OF 81

NOTICE OF PROPRIETARY PROPERTY:
THE INFORMATION CONTAINED HEREIN IS THE PROPRIETARY PROPERTY OF APPLE INC.
THE POSESSOR AGREES TO THE FOLLOWING:
I TO MAINTAIN THIS DOCUMENT IN CONFIDENCE
II NOT TO REPRODUCE OR COPY IT
III NOT TO REVEAL OR PUBLISH IT IN WHOLE OR PART
IV ALL RIGHTS RESERVED

ANTENNA

Please loop in Matt Mow (Antenna Team)
when changing these components!

FL4103
150OHM-25%-200MA-0.7DCR
01005
ROOM=DOCK_B2B
PP3V0_LAT_CONN
C4134 220PF 5% 10V C0G-CERM 01005 ROOM=DOCK_B2B

FL4107
150OHM-25%-200MA-0.7DCR
53 40 29 19 PP3V0_TRISTAR_ANT_PROX
01005
ROOM=DOCK_B2B
PP3V0_LAT1_CONN 41
VOLTAGE=3.0V
C4119 220PF 5% 10V C0G-CERM 01005 ROOM=DOCK_B2B

FL4108
150OHM-25%-200MA-0.7DCR
PP1V8_SDRAM
01005
ROOM=DOCK_B2B
PP1V8_LAT_ARC_CONN 41
C4120 220PF 5% 10V C0G-CERM 01005 ROOM=DOCK_B2B

53 BB_TO_LAT_ANT_SCLK
R4109 0.00 0% 1/32W MF 01005 ROOM=DOCK_B2B
BB_TO_LAT_ANT_SCLK_CONN 41
C4121 33PF 5% 16V NP0-C0G-CERM 01005 ROOM=DOCK_B2B

53 BB_TO_LAT_ANT_DATA
R4110 0.00 0% 1/32W MF 01005 ROOM=DOCK_B2B
BB_TO_LAT_ANT_DATA_CONN 41
C4122 33PF 5% 16V NP0-C0G-CERM 01005 ROOM=DOCK_B2B

ARC CONTROL

#26118161: Update FL4104 to 49.9ohm

47 36 I2C_HOMER_SCL
R4104 49.9 1% 1/32W MF 01005 ROOM=DOCK_B2B
I2C_HOMER_SCL_CONN 41
CKPLUS_WAIVE=I2C_PULLUP
C4135 56PF 5% 25V NP0-C0G-CERM 01005 ROOM=DOCK_B2B

FL4112
150OHM-25%-200MA-0.7DCR
01005
47 36 I2C_HOMER_SDA
I2C_HOMER_SDA_CONN 41
CKPLUS_WAIVE=I2C_PULLUP
C4136 56PF 5% 25V NP0-C0G-CERM 01005 ROOM=DOCK_B2B

ARC1

41 35 ARC1_TO_SOLENOID1_OUT_POS
41 35 ARC1_TO_SOLENOID1_OUT_NEG
C4101 220PF 5% 10V C0G-CERM 01005 ROOM=DOCK_B2B
C4102 220PF 5% 10V C0G-CERM 01005 ROOM=DOCK_B2B

Antenna GPIO

FL4101
150OHM-25%-200MA-0.7DCR
53 BB_TO_LAT_GPO1
01005
ROOM=DOCK_B2B
BB_TO_LAT_GPO1_CONN 41
C4110 56PF 5% 25V NP0-C0G-CERM 01005 ROOM=DOCK_B2B

FL4102
150OHM-25%-200MA-0.7DCR
53 BB_TO_LAT_GPO2
01005
ROOM=DOCK_B2B
BB_TO_LAT_GPO2_CONN 41
C4111 56PF 5% 25V NP0-C0G-CERM 01005 ROOM=DOCK_B2B

Per ANT Erdinc, change to cap

LOWER MIC1/4

FL4116
150OHM-25%-200MA-0.7DCR
31 LOWERMIC1_TO_CODEC_AIN1_P
01005
ROOM=DOCK_B2B
LOWERMIC1_TO_CODEC_AIN1_CONN_POS 41
C4128 56PF 5% 25V NP0-C0G-CERM 01005 ROOM=DOCK_B2B

FL4117
150OHM-25%-200MA-0.7DCR
31 LOWERMIC1_TO_CODEC_AIN1_N
01005
ROOM=DOCK_B2B
LOWERMIC1_TO_CODEC_AIN1_CONN_NEG 41
C4129 56PF 5% 25V NP0-C0G-CERM 01005 ROOM=DOCK_B2B

FL4118
150OHM-25%-200MA-0.7DCR
32 PP_CODEC_TO_LOWERMIC1_BIAS
01005
ROOM=DOCK_B2B
PP_CODEC_TO_LOWERMIC1_BIAS_CONN 41
C4130 220PF 5% 10V C0G-CERM 01005 ROOM=DOCK_B2B

FL4119
150OHM-25%-200MA-0.7DCR
31 LOWERMIC4_TO_CODEC_AIN2_P
01005
ROOM=DOCK_B2B
LOWERMIC4_TO_CODEC_AIN2_CONN_POS 41
C4131 56PF 5% 25V NP0-C0G-CERM 01005 ROOM=DOCK_B2B

FL4120
150OHM-25%-200MA-0.7DCR
31 LOWERMIC4_TO_CODEC_AIN2_N
01005
ROOM=DOCK_B2B
LOWERMIC4_TO_CODEC_AIN2_CONN_NEG 41
C4132 56PF 5% 25V NP0-C0G-CERM 01005 ROOM=DOCK_B2B

FL4121
150OHM-25%-200MA-0.7DCR
32 PP_CODEC_TO_LOWERMIC4_BIAS
01005
ROOM=DOCK_B2B
PP_CODEC_TO_LOWERMIC4_BIAS_CONN 41
C4133 220PF 5% 10V C0G-CERM 01005 ROOM=DOCK_B2B

SPEAKER1

FL4114
150OHM-25%-200MA-0.7DCR
34 SPEAKER_TO_SPEAKERAMP1_VSENSE_P
01005
ROOM=DOCK_B2B
SPEAKER_TO_SPEAKERAMP1_VSENSE_CONN_POS 41
C4126 220PF 5% 10V C0G-CERM 01005 ROOM=DOCK_B2B

FL4115
150OHM-25%-200MA-0.7DCR
34 SPEAKER_TO_SPEAKERAMP1_VSENSE_N
01005
ROOM=DOCK_B2B
SPEAKER_TO_SPEAKERAMP1_VSENSE_CONN_NEG 41
C4127 220PF 5% 10V C0G-CERM 01005 ROOM=DOCK_B2B

41 34 SPEAKERAMP1_TO_SPEAKER_OUT_POS
C4103 220PF 5% 10V C0G-CERM 01005 ROOM=DOCK_B2B

41 34 SPEAKERAMP1_TO_SPEAKER_OUT_NEG
C4104 220PF 5% 10V C0G-CERM 01005 ROOM=DOCK_B2B

VOLTAGE=16.0V

40 21 4 PP5V0_USB
C4109 0.1UF 10% 25V X5R 0201 ROOM=DOCK_B2B
C4105 0.1UF 10% 25V X5R 0201 ROOM=DOCK_B2B
C4106 0.1UF 10% 25V X5R 0201 ROOM=DOCK_B2B
C4107 330PF 10% 16V CER-X7R 01005 ROOM=DOCK_B2B
C4108 56PF 5% 25V NP0-C0G-CERM 01005 ROOM=DOCK_B2B
J4101 245857 F-ST-SM

#25429221:Carrier Dock flex to add +1 ACC2 pin

41 34 SPEAKERAMP1_TO_SPEAKER_OUT_NEG	1	2	
41 SPEAKER_TO_SPEAKERAMP1_VSENSE_CONN_NEG	3	4	
46 BB_TO_LAT_GPO3_CONN	5	6	PP_TRISTAR_ACC2_CONN 41
41 LOWERMIC4_TO_CODEC_AIN2_CONN_NEG	7	8	BB_TO_LAT_GPO2_CONN 41
41 PP_CODEC_TO_LOWERMIC4_BIAS_CONN	9	10	LOWERMIC4_TO_CODEC_AIN2_CONN_POS 41
41 PP_TRISTAR_ACC1_CONN	11	12	LOWERMIC4_TO_CODEC_BIAS_FILT_RET 32
#22499940:Change Net Name to POS/NEG	13	14	BB_TO_LAT_GPO1_CONN 41
40 4 90_TRISTAR_DP2_CONN_P	15	16	BB_TO_LAT_ANT_SCLK_CONN 41
40 4 90_TRISTAR_DP2_CONN_N	17	18	BB_TO_LAT_ANT_DATA_CONN 41
	19	20	PP1V8_LAT_ARC_CONN 41
40 4 90_TRISTAR_DP1_CONN_N	21	22	PP3V0_LAT1_CONN 41
40 4 90_TRISTAR_DP1_CONN_P	23	24	
	25	26	
31 MIKEYBUS_REFERENCE	27	28	
41 LOWERMIC1_TO_CODEC_AIN1_CONN_POS	29	30	LOWERMIC1_TO_CODEC_AIN1_CONN_NEG 41
32 LOWERMIC1_TO_CODEC_BIAS_FILT_RET	31	32	PP_CODEC_TO_LOWERMIC1_BIAS_CONN 41
	33	34	TRISTAR_CON_DETECT_CONN_L 41
47 I2C_MIC1_SDA_CONN	35	36	
47 I2C_MIC1_SCL_CONN	37	38	
	39	40	ARC1_TO_SOLENOID1_OUT_NEG 35 41
41 35 ARC1_TO_SOLENOID1_OUT_POS	41	42	ARC1_TO_SOLENOID1_OUT_POS 35 41
35 SOLENOID1_TO_ARC1_VSENSE_POS	43	44	SOLENOID1_TO_ARC1_VSENSE_NEG 35
41 PP3V0_LAT_CONN	45	46	I2C_HOMER_SDA_CONN 41
41 SPEAKER_TO_SPEAKERAMP1_VSENSE_CONN_POS	47	48	I2C_HOMER_SCL_CONN 41
41 34 SPEAKERAMP1_TO_SPEAKER_OUT_POS	51	52	
	54		

DOCK FLEX CONNECTOR

TRISTAR

40 4 TRISTAR_CON_DETECT_L
R4102 1.00K 5% 1/32W MF 01005 ROOM=DOCK_B2B
TRISTAR_CON_DETECT_CONN_L 41
C4116 27PF 5% 16V NP0-C0G 01005 ROOM=DOCK_B2B

40 4 PP_TRISTAR_ACC1
FL4105 10-OHM-1.1A 01005 ROOM=DOCK_B2B
PP_TRISTAR_ACC1_CONN 41
VOLTAGE=4.3V
C4117 100PF 5% 16V NP0-C0G 01005 ROOM=DOCK_B2B

40 4 PP_TRISTAR_ACC2
FL4106 22-OHM-25%-1800MA 0201 ROOM=DOCK_B2B
#25098110: Decrease DCR
PP_TRISTAR_ACC2_CONN 41
VOLTAGE=4.3V
C4118 100PF 5% 16V NP0-C0G 01005 ROOM=DOCK_B2B

USB AC Coupling

AC return path for USB pairs which is referenced to GND and VDD_MAIN

27 26 25 23 21 19 18 10 3 4 53
46 40 39 37 35 34 33 31 30 29
PP_VDD_MAIN
C4143 220PF 5% 10V C0G-CERM 01005 ROOM=DOCK

PAGE TITLE	B2B:DOCK FLEX
Apple Inc.	DRAWING NUMBER 051-00482 SIZE D
	REVISION 8.0.0
NOTICE OF PROPRIETARY PROPERTY: THE INFORMATION CONTAINED HEREIN IS THE PROPRIETARY PROPERTY OF APPLE INC. THE POSESSOR AGREES TO THE FOLLOWING: I TO MAINTAIN THIS DOCUMENT IN CONFIDENCE II NOT TO REPRODUCE OR COPY IT III NOT TO REVEAL OR PUBLISH IT IN WHOLE OR PART IV ALL RIGHTS RESERVED	BRANCH
	PAGE 41 OF 53
	SHEET 41 OF 81

Mr Huy - Vietmobile.vn

PAGE TITLE
spare

Apple Inc.

DRAWING NUMBER 051-00482
SIZE D
REVISION 8.0.0
BRANCH
PAGE 42 OF 53
SHEET 42 OF 81

NOTICE OF PROPRIETARY PROPERTY:
THE INFORMATION CONTAINED HEREIN IS THE PROPRIETARY PROPERTY OF APPLE INC.
THE POSESSOR AGREES TO THE FOLLOWING:
I TO MAINTAIN THIS DOCUMENT IN CONFIDENCE
II NOT TO REPRODUCE OR COPY IT
III NOT TO REVEAL OR PUBLISH IT IN WHOLE OR PART
IV ALL RIGHTS RESERVED

Mr Huy - Vietmobile.vn

PAGE TITLE
spare

Apple Inc.

DRAWING NUMBER 051-00482
SIZE D
REVISION 8.0.0
BRANCH
PAGE 43 OF 53
SHEET 43 OF 81

NOTICE OF PROPRIETARY PROPERTY:
THE INFORMATION CONTAINED HEREIN IS THE PROPRIETARY PROPERTY OF APPLE INC.
THE POSESSOR AGREES TO THE FOLLOWING:
I TO MAINTAIN THIS DOCUMENT IN CONFIDENCE
II NOT TO REPRODUCE OR COPY IT
III NOT TO REVEAL OR PUBLISH IT IN WHOLE OR PART
IV ALL RIGHTS RESERVED

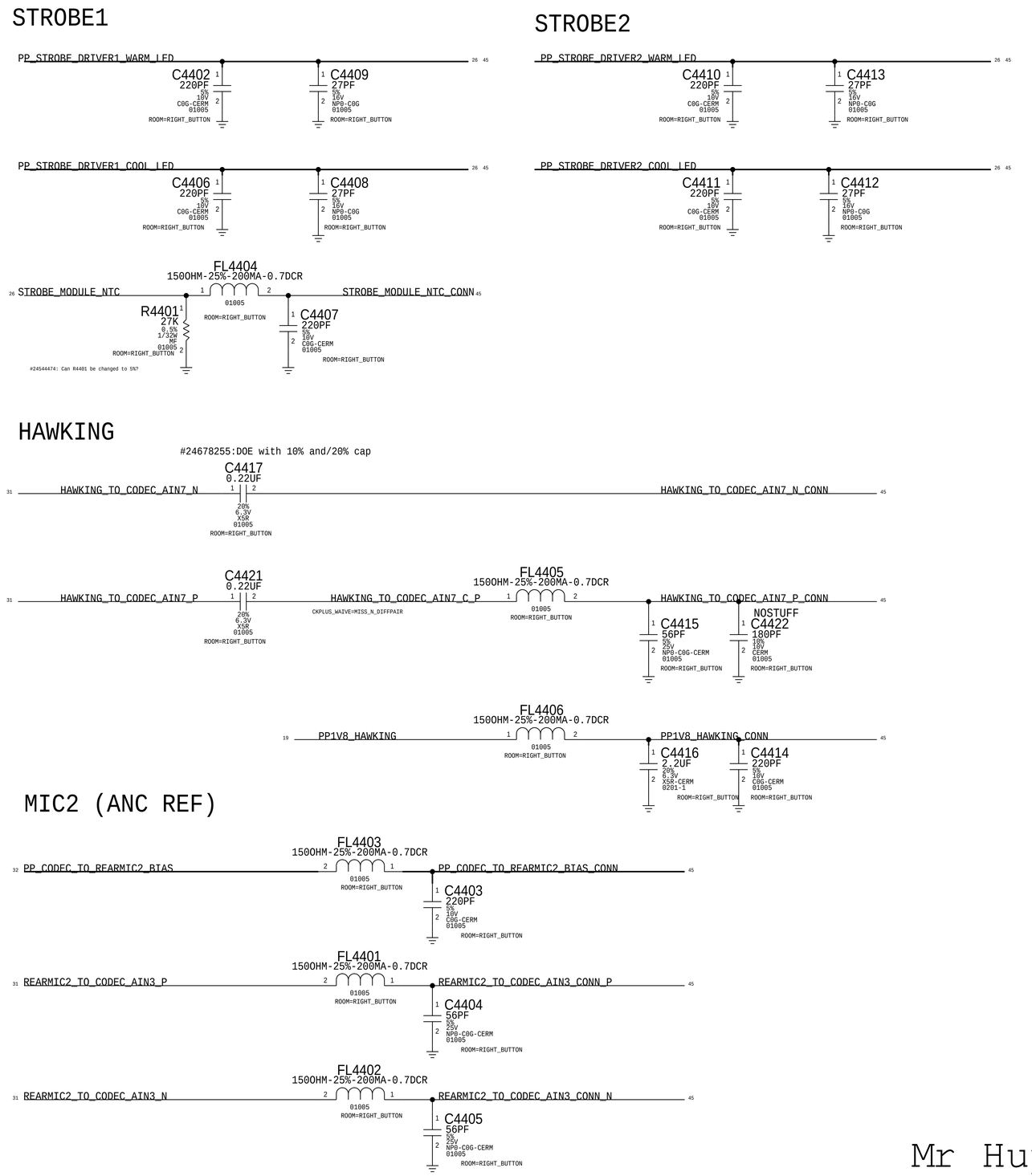

Mr Huy - Vietmobile.vn

PAGE TITLE
B2B FILTERS: RIGHT BUTTON FLEX

Apple Inc.

DRAWING NUMBER 051-00482 SIZE D
REVISION 8.0.0
BRANCH
PAGE 44 OF 53
SHEET 44 OF 81

NOTICE OF PROPRIETARY PROPERTY:
THE INFORMATION CONTAINED HEREIN IS THE PROPRIETARY PROPERTY OF APPLE INC.
THE POSESSOR AGREES TO THE FOLLOWING:
I TO MAINTAIN THIS DOCUMENT IN CONFIDENCE
II NOT TO REPRODUCE OR COPY IT
III NOT TO REVEAL OR PUBLISH IT IN WHOLE OR PART
IV ALL RIGHTS RESERVED

UTAH-D FLEX CONNECTOR

516S00152 RCPT (USED ON MLB) <-- THIS ONE
516S00151 PLUG

J4501
AA26D-S022VA1
F-ST-SM
ROOM=RCAM_B2B

25	PP3V0_UT_SVDD_CONN	90_LPDP_UT_TO_AP_D2_CONN_N	25
25	LPDP_UT_BI_AP_AUX_CONN	90_LPDP_UT_TO_AP_D2_CONN_P	25
25	AP_TO_UT_SHUTDOWN_CONN_L		
30 25	UT_AND_NV_TO_LED_DRIVER_STROBE_EN_CONN	90_LPDP_UT_TO_AP_D3_CONN_N	25
30	UT_TO_NV_SYNC_J2501_CONN	90_LPDP_UT_TO_AP_D3_CONN_P	25
25	PP1V8_UT_CONN		
48	I2C_UT_SDA_CONN	AP_TO_UT_CLK_CONN	25
48	I2C_UT_SCL_CONN		
25	PP2V8_UT_AF_VAR_CONN	PP2V9_UT_AVDD_CONN	25 46
25	PP1V2_UT_VDD_CONN		

DISPLAY / TOUCH FLEX CONNECTOR

MLB: 516S00050

J4502
BB35C-RA48-3A
F-ST-SM

R4501
200
1%
1/32W
MF
01005
ROOM=DISPLAY_B2B

C4507
56PF
5%
25V
NP0-C0G-CERM
01005
ROOM=DISPLAY_B2B

PP4501
P2MM-NSM
SM
PP

38	MAMBA_TO_LCM_MDRIVE	1	2	I2C_DISP_EEPROM_SCL_CONN	47 CKPLUS_WAIVE=I2C_PULLUP
47	I2C_DISP_EEPROM_SDA_CONN CKPLUS_WAIVE=I2C_PULLUP	3	4	I2C_TOUCH_BI_MAMBA_SDA	47
47	I2C_TOUCH_TO_MAMBA_SCL	5	6	SPI_AP_TO_TOUCH_MOSI_CONN	39
	I2C_TOUCH_SCL_CONN	7	8	TOUCH_TO_AP_INT_L_CONN	39
39	SPI_TOUCH_TO_AP_MISO_CONN	9	10	AP_TO_TOUCH_MAMBA_RESET_CONN_L	38 39
39	SPI_AP_TO_TOUCH_CS_CONN_L	11	12	Per #25048465:No Satin flex support in CRB	
39	AP_TO_CUMULUS_CLK_32K_CONN	13	14	UART_AOP_TO_TOUCH_TXD_CONN	39
39	SPI_AP_TO_TOUCH_SCLK_CONN	15	16	PMU_TO_LCM_PANICB_CONN	39
39	UART_TOUCH_TO_AOP_RXD_CONN	17	18	PP1V8_LCM_CONN	39
39	AP_TO_LCM_RESET_CONN_L	19	20	PP5V7_LCM_AVDDH_CONN	39
39	PP5V1_TOUCH_VDDH_CONN	21	22	LCM_TO_CHESTNUT_PWR_EN_CONN	39
39	PP1V8_TOUCH_CONN	23	24	LCM_TO_MANY_BSYNC_CONN	39
39	PN5V7_LCM_MESON_AVDDN_CONN	25	26		
39	PP5V7_MESON_AVDDH_CONN	27	28	90_MIPI_AP_TO_LCM_DATA0_CONN_P	39
38	LCM_TO_MAMBA_MSYNC_CONN	29	30	90_MIPI_AP_TO_LCM_DATA0_CONN_N	39
	TP_LCM_PIFA	31	32		
39	90_MIPI_AP_TO_LCM_CLK_CONN_P	33	34	90_MIPI_AP_TO_LCM_DATA1_CONN_P	39
39	90_MIPI_AP_TO_LCM_CLK_CONN_N	35	36	90_MIPI_AP_TO_LCM_DATA1_CONN_N	39
39 4	PP_LCM_BL_CAT1_CONN	37	38		
39 4	PP_LCM_BL_ANODE_CONN	39	40	90_MIPI_AP_TO_LCM_DATA2_CONN_P	46
39 4	PP_LCM_BL_CAT2_CONN	41	42	90_MIPI_AP_TO_LCM_DATA2_CONN_N	46
46 4	PP_LCM_BL34_CAT1_CONN	43	44		
46 4	PP_LCM_BL34_ANODE_CONN	45	46	90_MIPI_AP_TO_LCM_DATA3_CONN_P	46
46 4	PP_LCM_BL34_CAT2_CONN	47	48	90_MIPI_AP_TO_LCM_DATA3_CONN_N	46

FOREHEAD FLEX CONNECTOR

MLB: 516S00146 (MCO REV 27)

ROOM=FOREHEAD
CRITICAL
J4503
245858036201829
F-ST-SM

29	PP2V9_NH_AVDD_CONN	90_MIPI_NH_TO_AP_DATA0_P	9
29	PP1V8_NH_TO_CONN	90_MIPI_NH_TO_AP_DATA0_N	9
29	AP_TO_NH_SHUTDOWN_CONN_L	90_MIPI_NH_TO_AP_CLK_P	9
		90_MIPI_NH_TO_AP_CLK_N	9
29	AP_TO_NH_CLK_CONN		
		90_MIPI_NH_TO_AP_DATA1_P	9
48	I2C_NH_SCL_CONN	90_MIPI_NH_TO_AP_DATA1_N	9
47	I2C_ALS_CONVOY_SCL_CONN		
29	PDM_CONVOY_TO_ADARE_DATA_CONN	PP1V2_NH_DVDD_CONN	29
29	PP3V0_PROX_CONN	I2C_NH_SDA_CONN	48
29	SPEAKER_TO_SPEAKERAMP2_VSENSE_CONN_N	ALS_TO_AP_INT_CONN_L	29
46 33 29	SPEAKERAMP2_TO_SPEAKER_OUT_NEG	I2C_ALS_CONVOY_SDA_CONN	47
48	I2C_PROX_SDA_CONN	PDM_ADARE_TO_CONVOY_CLK_CONN	29
48	I2C_PROX_SCL_CONN	PP3V0_ALS_CONVOY_CONN	29
29	PROX_BI_AP_AOP_INT_PWM_L_CONN	SPEAKER_TO_SPEAKERAMP2_VSENSE_CONN_P	29
29	PP_CODEC_TO_FRONTMIC3_BIAS_CONN	SPEAKERAMP2_TO_SPEAKER_OUT_POS	29 33 46
29	FRONTMIC3_TO_CODEC_AIN4_CONN_P	FRONTMIC3_TO_CODEC_AIN4_CONN_N	29

COMBO BUTTON FLEX CONNECTOR

APPLE APN: 516S00150 <-- THIS ONE ON MLB (matched MCO rev 27)
APPLE APN: 516S00149

ROOM=RIGHT_BUTTON
J4504
AA37D-S014SVA1
F-ST-SM

XW4501
SHORT-20L-0.05MM-SM

MAKE_BASE=TRUE	GND			
44 26	PP_STROBE_DRIVER2_COOL_LED			
44	STROBE_MODULE_NTC_CONN	PP_CODEC_TO_REARMIC2_BIAS_CONN	44
44	PP1V8_HAWKING_CONN	REARMIC2_TO_CODEC_AIN3_CONN_N	44
44	HAWKING_TO_CODEC_AIN7_P_CONN	REARMIC2_TO_CODEC_AIN3_CONN_P	44
44	HAWKING_TO_CODEC_AIN7_N_CONN	REARMIC2_TO_CODEC_BIAS_FILT_RET	32
44	BUTTON_RINGER_A_CONN	I2C_MIC2_SDA_CONN	47
44	BUTTON_VOL_UP_CONN_L	I2C_MIC2_SCL_CONN	47
44	BUTTON_VOL_DOWN_CONN_L	BUTTON_POWER_KEY_CONN_L	44
44 26	PP_STROBE_DRIVER2_WARM_LED	PP_STROBE_DRIVER1_COOL_LED	26 44
44 26	PP_STROBE_DRIVER1_WARM_LED		

CRITICAL

SYNC_MASTER=sync SYNC_DATE=05/17/2016

PAGE TITLE
B2B FF SPECIFIC

Apple Inc.

DRAWING NUMBER 051-00482
SIZE D
REVISION 8.0.0
BRANCH
PAGE 45 OF 53
SHEET 45 OF 81

NOTICE OF PROPRIETARY PROPERTY:
THE INFORMATION CONTAINED HEREIN IS THE PROPRIETARY PROPERTY OF APPLE INC.
THE POSESSOR AGREES TO THE FOLLOWING:
I TO MAINTAIN THIS DOCUMENT IN CONFIDENCE
II NOT TO REPRODUCE OR COPY IT
III NOT TO REVEAL OR PUBLISH IT IN WHOLE OR PART
IV ALL RIGHTS RESERVED

THIS PAGE UNIQUE TO LARGE FORM FACTOR

2ND BACKLIGHT DRIVER - 4LED

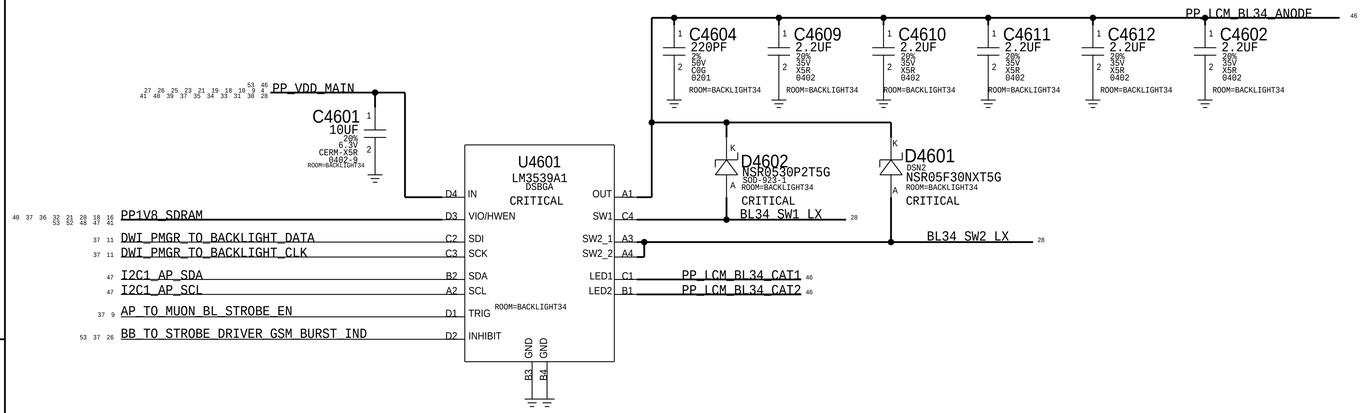

ISP I2C1

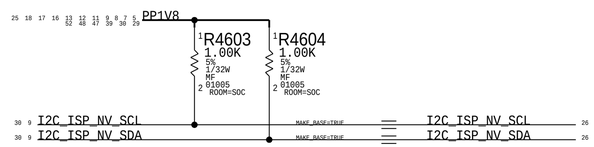

TOUCH I2C

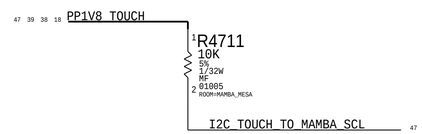

VDD MAIN CAP
AC Coupling Caps

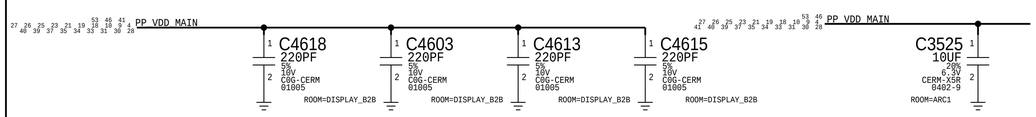

AC return path for LCM MIPI which is referenced to GND and VDD_MAIN

ARC CAP

CHESTNUT CAP

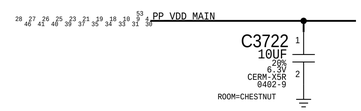

ACC Buck Caps

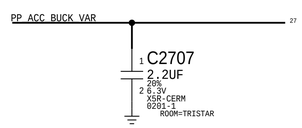

Top Speaker Compass Coil

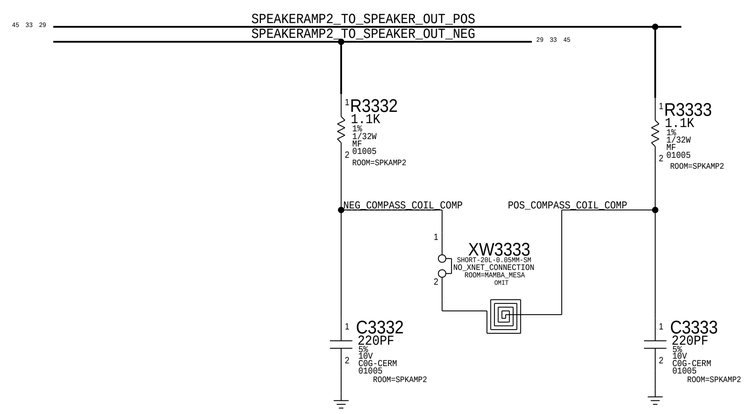

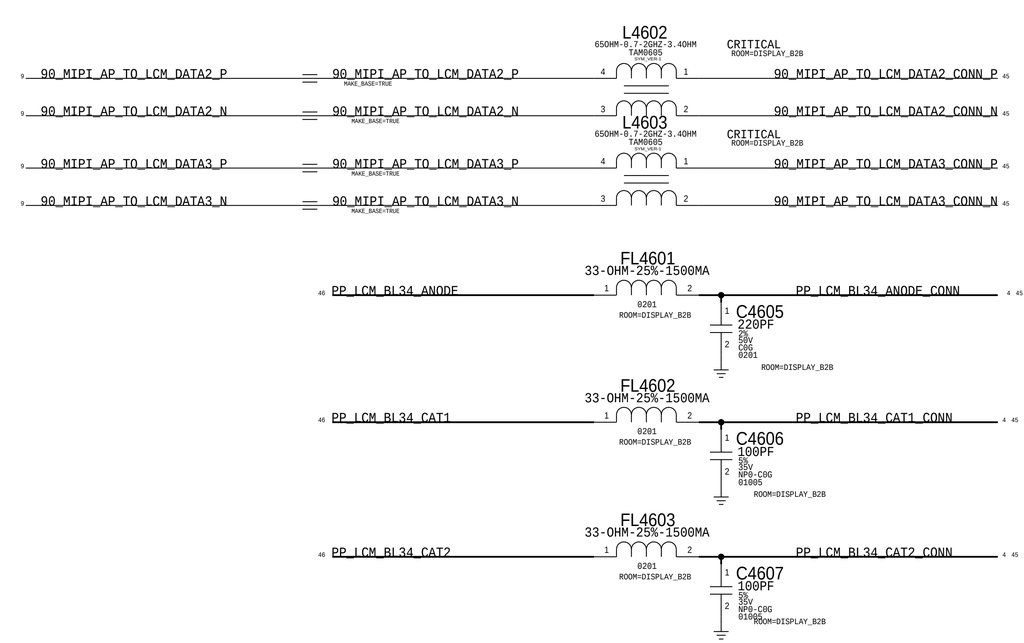

Dock B2B (Pg 41)

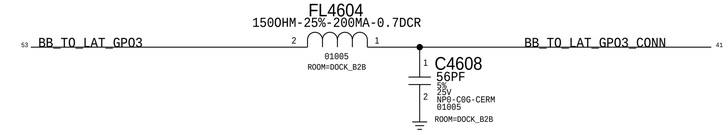

UT B2B

Extra RF GND

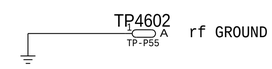

PAGE TITLE
LARGE FORM FACTOR SPECIFIC

Apple Inc.

DRAWING NUMBER 051-00482 SIZE D
REVISION 8.0.0
BRANCH
PAGE 46 OF 53
SHEET 46 OF 81

NOTICE OF PROPRIETARY PROPERTY:
THE INFORMATION CONTAINED HEREIN IS THE PROPRIETARY PROPERTY OF APPLE INC.
THE POSESSOR AGREES TO THE FOLLOWING:
I TO MAINTAIN THIS DOCUMENT IN CONFIDENCE
II NOT TO REPRODUCE OR COPY IT
III NOT TO REVEAL OR PUBLISH IT IN WHOLE OR PART
IV ALL RIGHTS RESERVED

AP

I2C0

PP1V8

R4701 4.02K 1% 1/32W MF 01005 ROOM=SOC
R4702 4.02K 1% 1/32W MF 01005 ROOM=SOC

I2C0_AP_SCL
I2C0_AP_SDA

#24544434

NOSTUFF C4701 56PF 5% 25V NP0-C0G-CERM 01005 ROOM=SOC
NOSTUFF C4702 56PF 5% 25V NP0-C0G-CERM 01005 ROOM=SOC

MAKE_BASE=TRUE

I2C0_AP_SCL
I2C0_AP_SDA

I2C1

PP1V8

R4703 4.02K 1% 1/32W MF 01005 ROOM=SOC
R4704 4.02K 1% 1/32W MF 01005 ROOM=SOC

I2C1_AP_SCL
I2C1_AP_SDA

#24544426

NOSTUFF C4703 56PF 5% 25V NP0-C0G-CERM 01005 ROOM=PMU
NOSTUFF C4704 56PF 5% 25V NP0-C0G-CERM 01005 ROOM=PMU

MAKE_BASE=TRUE

I2C1_AP_SCL
I2C1_AP_SDA

D11/111 ONLY

I2C2

PP1V8

R4705 2.2K 5% 1/32W MF 01005 ROOM=SOC
R4706 2.2K 5% 1/32W MF 01005 ROOM=SOC

I2C2_AP_SCL
I2C2_AP_SDA

MAKE_BASE=TRUE

I2C2_AP_SCL
I2C2_AP_SDA

R4707 0.00 0% 1/32W MF 01005 ROOM=FOREHEAD
R4708 0.00 0% 1/32W MF 01005 ROOM=FOREHEAD

I2C_ALS_CONVOY_SCL_CONN
I2C_ALS_CONVOY_SDA_CONN

C4707 56PF 5% 25V NP0-C0G-CERM 01005 ROOM=FOREHEAD
C4708 56PF 5% 25V NP0-C0G-CERM 01005 ROOM=FOREHEAD

TO FOREHEAD FLEX

TOUCH

PP1V8_TOUCH

NOSTUFF R4712 10K 5% 1/32W MF 01005 ROOM=MAMBA_MESA

NOTE:MAMBA I2C 2.2K PULL-UPS TO PP1V8_TOUCH INSIDE GALILEO
ADDING R3803, R3804 AS OPTION FOR TWEAKING VALUE

I2C_TOUCH_TO_MAMBA_SCL
I2C_TOUCH_BI_MAMBA_SDA

MAKE_BASE=TRUE

I2C_TOUCH_TO_MAMBA_SCL
I2C_TOUCH_BI_MAMBA_SDA

TO MAMBA / MESA FLEX

NOSTUFF C4709 56PF 5% 25V NP0-C0G-CERM 01005 ROOM=MAMBA_MESA
NOSTUFF C4710 56PF 5% 25V NP0-C0G-CERM 01005 ROOM=MAMBA_MESA

I2C_TOUCH_TO_MAMBA_SCL
I2C_TOUCH_BI_MAMBA_SDA

TO DISPLAY / TOUCH FLEX

C4711 56PF 5% 25V NP0-C0G-CERM 01005 ROOM=DISPLAY_B2B
C4712 56PF 5% 25V NP0-C0G-CERM 01005 ROOM=DISPLAY_B2B

HOMER

PP1V8_SDRAM

R4713 1.00K 5% 1/32W MF 01005 ROOM=HOMER
R4714 1.00K 5% 1/32W MF 01005 ROOM=HOMER

I2C_HOMER_SCL
I2C_HOMER_SDA

I2C5

PP1V8

R4715 2.2K 5% 1/32W MF 01005 ROOM=SOC
R4716 2.2K 5% 1/32W MF 01005 ROOM=SOC

I2C5_SCL
I2C5_SDA

I2C3

PP1V8

R4709 2.2K 5% 1/32W MF 01005 ROOM=SOC
R4710 2.2K 5% 1/32W MF 01005 ROOM=SOC

I2C3_AP_SCL
I2C3_AP_SDA

ROOM=DOCK
FL4730 1500HM-25%-200MA-0.7DCR 01005

ckplus_waive=I2C_PULLUP
I2C_MIC1_SCL_CONN

FL4729 100 5% 1/32W MF 01005 ROOM=DOCK

CKPLUS_WAIVE=I2C_PULLUP
I2C_MIC1_SDA_CONN

TO DOCK FLEX

C4730 56PF 5% 25V NP0-C0G-CERM 01005 ROOM=DOCK_B2B
C4729 56PF 5% 25V NP0-C0G-CERM 01005 ROOM=DOCK_B2B

ROOM=RIGHT_BUTTON
FL4732 1500HM-25%-200MA-0.7DCR 01005

I2C_MIC2_SCL_CONN
CKPLUS_WAIVE=I2C_PULLUP

FL4731 1500HM-25%-200MA-0.7DCR 01005 ROOM=RIGHT_BUTTON

I2C_MIC2_SDA_CONN
CKPLUS_WAIVE=I2C_PULLUP

TO COMBINED BUTTON FLEX

C4732 56PF 5% 25V NP0-C0G-CERM 01005 ROOM=RIGHT_BUTTON
C4731 56PF 5% 25V NP0-C0G-CERM 01005 ROOM=RIGHT_BUTTON

FL4742 1500HM-25%-200MA-0.7DCR 01005 ROOM=DISPLAY_B2B

I2C_DISP_EEPROM_SCL_CONN

FL4741 1500HM-25%-200MA-0.7DCR 01005 ROOM=DISPLAY_B2B

I2C_DISP_EEPROM_SDA_CONN

TO DISPLAY FLEX

C4742 56PF 5% 25V NP0-C0G-CERM 01005 ROOM=DISPLAY_B2B
C4741 56PF 5% 25V NP0-C0G-CERM 01005 ROOM=DISPLAY_B2B

PAGE TITLE	I2C MAP: AP, TOUCH, HOMER, I2C5
Apple Inc.	DRAWING NUMBER 051-00482 SIZE D
	REVISION 8.0.0
	BRANCH
	PAGE 47 OF 53
	SHEET 47 OF 81

NOTICE OF PROPRIETARY PROPERTY:
THE INFORMATION CONTAINED HEREIN IS THE PROPRIETARY PROPERTY OF APPLE INC.
THE POSESSOR AGREES TO THE FOLLOWING:
I TO MAINTAIN THIS DOCUMENT IN CONFIDENCE
II NOT TO REPRODUCE OR COPY IT
III NOT TO REVEAL OR PUBLISH IT IN WHOLE OR PART
IV ALL RIGHTS RESERVED

AOP
I2C

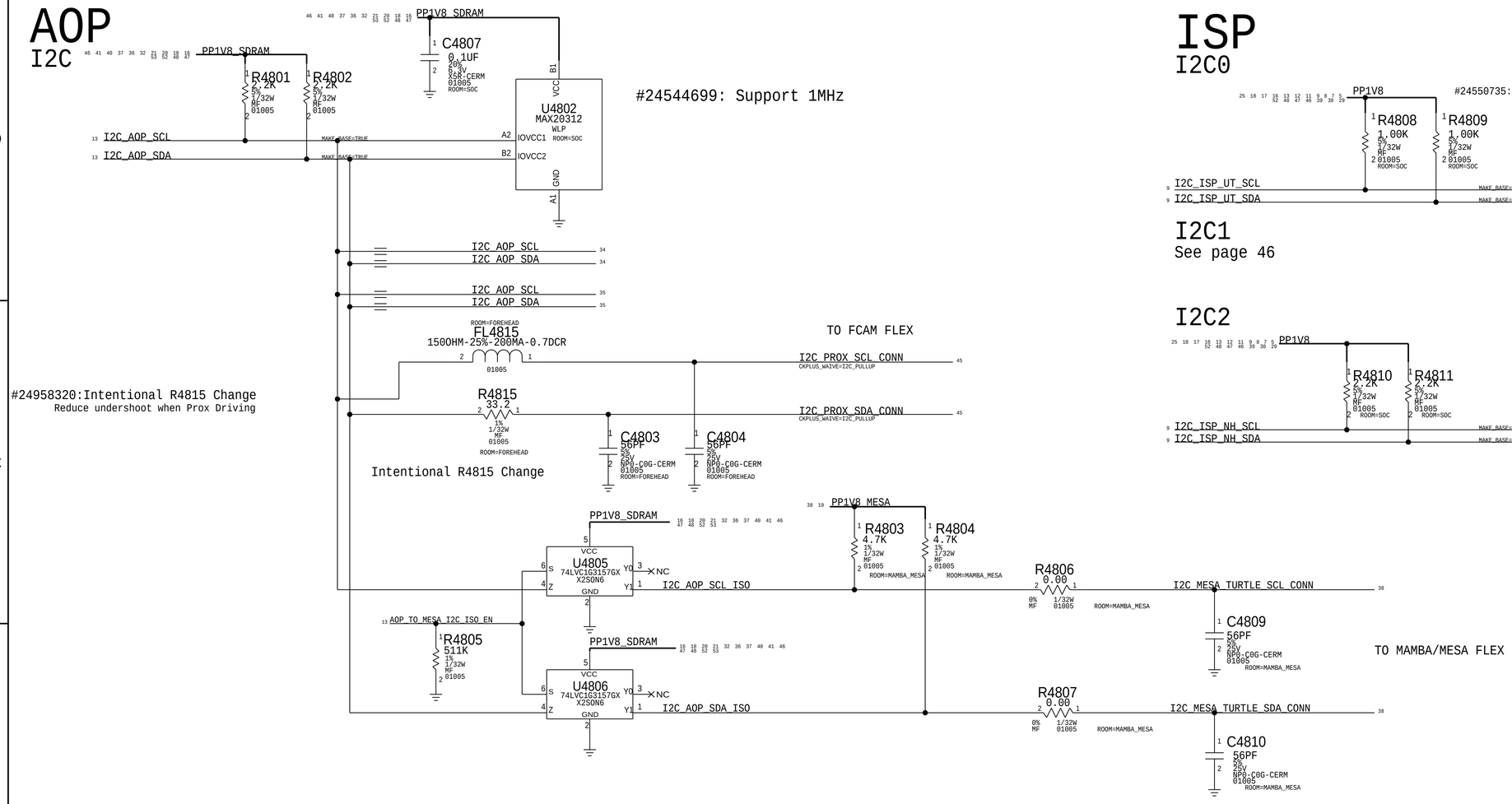

ISP
I2C0

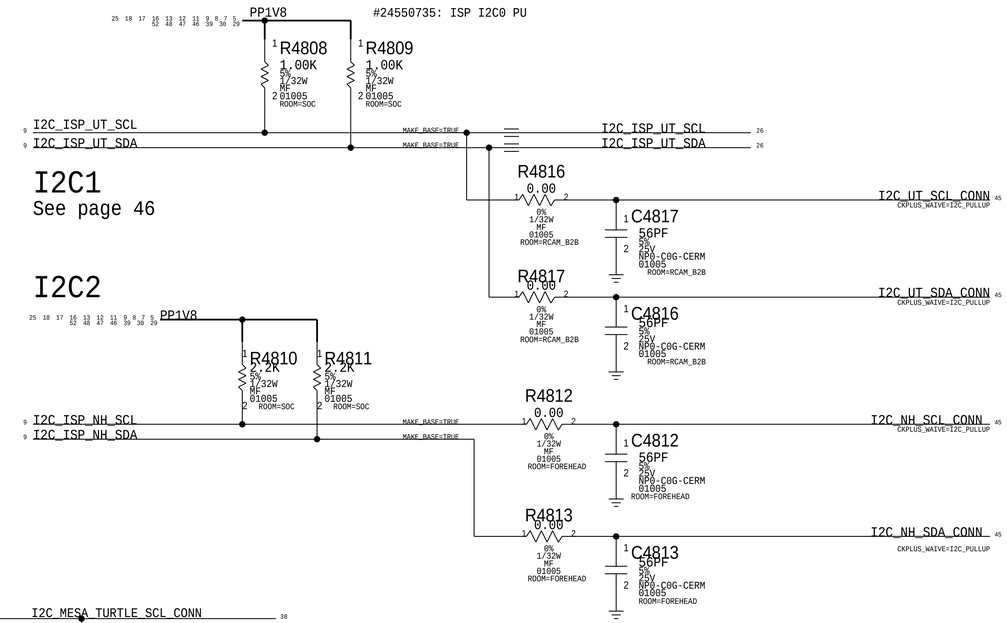

I2C1
See page 46

I2C2

PAGE TITLE	I2C MAP AOP
Apple Inc.	DRAWING NUMBER 051-00482 · SIZE D
	REVISION 8.0.0
	BRANCH
	PAGE 48 OF 53
	SHEET 48 OF 81

NOTICE OF PROPRIETARY PROPERTY:
THE INFORMATION CONTAINED HEREIN IS THE PROPRIETARY PROPERTY OF APPLE INC.
THE POSESSOR AGREES TO THE FOLLOWING:
I TO MAINTAIN THIS DOCUMENT IN CONFIDENCE
II NOT TO REPRODUCE OR COPY IT
III NOT TO REVEAL OR PUBLISH IT IN WHOLE OR PART
IV ALL RIGHTS RESERVED

D1x I2C Table

Bus	Device	Binary	7-bit Address	8-bit Address	Max Speed
ISP I2C0 *1MHz*	SALT LAKE (PRIMARY)	0010000X	0x10	0x20	1 MHz
	SALT LAKE (SECONDARY)	0110000X	0x30	0x60	1 MHz
	GRUNBERG (STANDARD)	0011100X	0x1C	0x38	1 MHz
	GRUNBERG (SPECIAL ABSOLUTE R/W)	0011101X	0x1D	0x3A	1 MHz
	GRUNBERG (SPECIAL DELTA READ)	0011110X	0x1E	0x3C	1 MHz
	STROBE 1	1100011X	0x63	0xC6	1 MHz
ISP I2C1 *1MHz*	LAS VEGAS (PRIMARY)	0100000X	0x20	0x40	1 MHz
	LAS VEGAS (SECONDARY)	0110000X	0x30	0x60	1 MHz
	EDWIN	1100011X	0x63	0xC6	400 kHz
	STROBE 2	0000110X	0x06	0x0C	1 MHz
ISP I2C2 *400kHz*	CONCORD	0010000X	0x10	0x20	1 MHz
AOP I2C *1MHz*	ARC DRIVER 1	100000YX	0x41	0x82	1 MHz
	PROX	1011000X	0x58	0xB0	1 MHz
	SPKAMP1 (L26)	100000YX	0x40	0x80	1 MHz
	TURTLE	0101100X	0x2c	0x58	400 kHz
	MESA	1100001X	0x61	0xC2	400 kHz
Touch I2C *600kHz*	MAMBA	1100000X	0x60	0xC0	1 MHz
	MESON	1000000X	0x40	0x80	510 kHz
EEPROM I2C	EEPROM	1010001X	0x51	0xA2	400 kHz
AP I2C0 *400kHz*	BOOST	1110101X	0x75	0xEA	3.4 MHz
	TRISTAR	0011010X	0x1A	0x34	400 kHz
	BACKLIGHT 1	1100010X	0x62	0xC4	1 MHz
	CHESTNUT	0100111X	0x27	0x4E	400 kHz
AP I2C1 *400kHz*	ADELYN	1110100X	0x74	0xE8	400 kHz
	TIGRIS	1110101X	0x75	0xEA	400 kHz
	BACKLIGHT 2	1100010X	0x62	0xC4	1 MHz
AP I2C2 *400kHz*	ALS	0101001X	0x29	0x52	400 kHz
	CONVOY	0100001X	0x21	0x42	3.4 MHz
		0100010X	0x22	0x44	400 kHz
	SPKAMP 2 (L26)	10000ZYX	0x40	0x80	400 MHz
AP I2C3 *100kHz*	DOCK FLEX (MIC1)	1010100X	0x54	0xA8	1 MHz
	COMBINED BUTTON FLEX (MIC2)	1010100X	0x56	0xAC	1 MHz
	DISP EEPROM	1010001X	0x51	0xA2	400kHz
Homer I2C *1MHz*	SCHRODINGER (STANDARD)	0001110X	0xE	0x1C	1 MHz
	SCHRODINGER (CAL REG'S)	0001111X	0xF	0x1D	1 MHz
	EEPROM (STANDARD)	1010000X	0x50	0xA0	
	EEPROM (CONFIG)	1010000X	0x50	0xA0	

PAGE TITLE
I2C TABLE

Apple Inc.

DRAWING NUMBER 051-00482 SIZE D
REVISION 8.0.0
BRANCH
PAGE 49 OF 53
SHEET 49 OF 81

NOTICE OF PROPRIETARY PROPERTY:
THE INFORMATION CONTAINED HEREIN IS THE PROPRIETARY PROPERTY OF APPLE INC.
THE POSESSOR AGREES TO THE FOLLOWING:
I TO MAINTAIN THIS DOCUMENT IN CONFIDENCE
II NOT TO REPRODUCE OR COPY IT
III NOT TO REVEAL OR PUBLISH IT IN WHOLE OR PART
IV ALL RIGHTS RESERVED

Mr Huy - Vietmobile.vn

spare

Mr Huy - Vietmobile.vn

spare

This page controls elements different accross all MLBs

PCIe Lanes

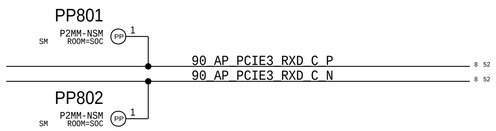

8 90_AP_PCIE2_RXD_C_P — C0816 (ROOM=SOC) 1 || 2 0.1UF 20% 6.3V X5R-CERM 01005 (GND_VCC3=TRUE) — 90_PCIE_BB_TO_AP_RXD_P 53 MAKE_BASE=TRUE

8 90_AP_PCIE2_RXD_C_N — C0817 (ROOM=SOC) 1 || 2 0.1UF 20% 6.3V X5R-CERM 01005 (GND_VCC3=TRUE) — 90_PCIE_BB_TO_AP_RXD_N 53 MAKE_BASE=TRUE

8 90_AP_PCIE2_TXD_C_P — C0815 (ROOM=SOC) 1 || 2 0.1UF 20% 6.3V X5R-CERM 01005 (GND_VCC3=TRUE) — 90_PCIE_AP_TO_BB_TXD_P 53 MAKE_BASE=TRUE

8 90_AP_PCIE2_TXD_C_N — C0818 (ROOM=SOC) 1 || 2 0.1UF 20% 6.3V X5R-CERM 01005 (GND_VCC3=TRUE) — 90_PCIE_AP_TO_BB_TXD_N 53 MAKE_BASE=TRUE

52 8 90_AP_PCIE3_RXD_C_P — C0811 (ROOM=SOC) 1 || 2 0.1UF 20% 6.3V X5R-CERM 01005 (GND_VCC3=TRUE) — 90_PCIE_WLAN_TO_AP_RXD_P 53 MAKE_BASE=TRUE

52 8 90_AP_PCIE3_RXD_C_N — C0812 (ROOM=SOC) 1 || 2 0.1UF 20% 6.3V X5R-CERM 01005 (GND_VCC3=TRUE) — 90_PCIE_WLAN_TO_AP_RXD_N 53 MAKE_BASE=TRUE

8 90_AP_PCIE3_TXD_C_P — C0814 (ROOM=SOC) 1 || 2 0.1UF 20% 6.3V X5R-CERM 01005 (GND_VCC3=TRUE) — 90_PCIE_AP_TO_WLAN_TXD_P 53 MAKE_BASE=TRUE

8 90_AP_PCIE3_TXD_C_N — C0813 (ROOM=SOC) 1 || 2 0.1UF 20% 6.3V X5R-CERM 01005 (GND_VCC3=TRUE) — 90_PCIE_AP_TO_WLAN_TXD_N 53 MAKE_BASE=TRUE

8 90_PCIE_AP_TO_WLAN_REFCLK_P — 90_PCIE_AP_TO_WLAN_REFCLK_P 53 MAKE_BASE=TRUE
8 90_PCIE_AP_TO_WLAN_REFCLK_N — 90_PCIE_AP_TO_WLAN_REFCLK_N 53 MAKE_BASE=TRUE
8 90_PCIE_AP_TO_BB_REFCLK_P — 90_PCIE_AP_TO_BB_REFCLK_P 53 MAKE_BASE=TRUE
8 90_PCIE_AP_TO_BB_REFCLK_N — 90_PCIE_AP_TO_BB_REFCLK_N 53 MAKE_BASE=TRUE
8 PCIE_AP_TO_WLAN_RESET_L — PCIE_AP_TO_WLAN_RESET_L 53 MAKE_BASE=TRUE
8 PCIE_AP_TO_BB_RESET_L — PCIE_AP_TO_BB_RESET_L 53 MAKE_BASE=TRUE
8 PCIE_WLAN_BI_AP_CLKREQ_L — PCIE_WLAN_BI_AP_CLKREQ_L 52 53 MAKE_BASE=TRUE
8 PCIE_BB_BI_AP_CLKREQ_L — PCIE_BB_BI_AP_CLKREQ_L 52 53 MAKE_BASE=TRUE

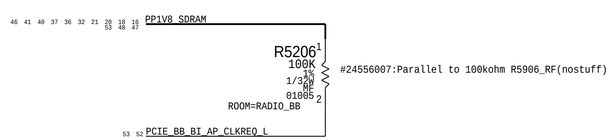

SYNC_MASTER=david-copy SYNC_DATE=03/01/2016

PAGE TITLE
MLB UNIQUE

Apple Inc.

DRAWING NUMBER 051-00482 SIZE D
REVISION 8.0.0
BRANCH
PAGE 52 OF 53
SHEET 52 OF 81

NOTICE OF PROPRIETARY PROPERTY:
THE INFORMATION CONTAINED HEREIN IS THE PROPRIETARY PROPERTY OF APPLE INC.
THE POSESSOR AGREES TO THE FOLLOWING:
I TO MAINTAIN THIS DOCUMENT IN CONFIDENCE
II NOT TO REPRODUCE OR COPY IT
III NOT TO REVEAL OR PUBLISH IT IN WHOLE OR PART
IV ALL RIGHTS RESERVED

Wifi/BT

T32 — WIFI_MLB

27 26 25 23 21 19 18 10 9 4 / 40 39 37 35 34 33 31 30 28	PP_VDD_MAIN	PP_VDD_MAIN	
46 41 40 37 36 32 21 20 18 16 / 60 59 58 55 53 52 48 47	PP1V8_SDRAM	PP1V8_SDRAM	
60 20	PMUGPIO_TO_WLAN_CLK32K	PMU_TO_WLAN_32K	
60 20	PMU_TO_WLAN_REG_ON	PMU_TO_WLAN_REG_ON	
60 20	PMU_TO_BT_REG_ON	PMU_TO_BT_REG_ON	
60 20	BT_TO_PMU_HOST_WAKE	BT_TO_PMU_HOST_WAKE	
60 12	AP_TO_BT_WAKE	AP_TO_BT_WAKE	
60 52	90_PCIE_AP_TO_WLAN_REFCLK_P	100_PCIE_AP_TO_WLAN_REFCLK_P	
60 52	90_PCIE_AP_TO_WLAN_REFCLK_N	100_PCIE_AP_TO_WLAN_REFCLK_N	
60 52	90_PCIE_AP_TO_WLAN_TXD_P	100_PCIE_AP_TO_WLAN_TX_P	
60 52	90_PCIE_AP_TO_WLAN_TXD_N	100_PCIE_AP_TO_WLAN_TX_N	
60 52	90_PCIE_WLAN_TO_AP_RXD_P	100_PCIE_WLAN_TO_AP_RX_P	
60 52	90_PCIE_WLAN_TO_AP_RXD_N	100_PCIE_WLAN_TO_AP_RX_N	WIFI_MLB
60 52	PCIE_AP_TO_WLAN_RESET_L	PCIE_AP_TO_WLAN_PERST_L	
60 52	PCIE_WLAN_BT_AP_CLKREQ_L	PCIE_AP_BI_WLAN_CLKREQ_L	
60 20	WLAN_TO_PMU_HOST_WAKE	PCIE_WLAN_TO_PMU_WAKE	
60 12	AP_TO_WLAN_DEVICE_WAKE	AP_TO_WLAN_DEV_WAKE	
60 12	UART_AP_TO_WLAN_TXD	UART_AP_TO_WLAN_TXD	
60 12	UART_WLAN_TO_AP_RXD	UART_WLAN_TO_AP_RXD	
60 12	UART_AP_TO_WLAN_RTS_L	UART_AP_TO_WLAN_RTS_L	
60 12	UART_WLAN_TO_AP_CTS_L	UART_WLAN_TO_AP_CTS_L	
60 12	UART_AP_TO_BT_TXD	UART_AP_TO_BT_TXD	
60 12	UART_BT_TO_AP_RXD	UART_BT_TO_AP_RXD	
60 12	UART_AP_TO_BT_RTS_L	UART_AP_TO_BT_RTS_L	
60 12	UART_BT_TO_AP_CTS_L	UART_BT_TO_AP_CTS_L	
60 13	AOP_TO_WLAN_CONTEXT_A	AOP_TO_WLAN_CONTEXT_A	
60 13	AOP_TO_WLAN_CONTEXT_B	AOP_TO_WLAN_CONTEXT_B	
60 11	I2S_AP_TO_BT_BCLK	I2S_AP_TO_BT_BCLK	
60 11	I2S_AP_TO_BT_LRCLK	I2S_AP_TO_BT_LRCK	
60 11	I2S_BT_TO_AP_DIN	I2S_BT_TO_AP_DIN	
60 11	I2S_AP_TO_BT_DOUT	I2S_AP_TO_BT_DOUT	
68 60 53	UART_BB_TO_WLAN_COEX	UART_BB_TO_WLAN_COEX	
68 60 53	UART_WLAN_TO_BB_COEX	UART_WLAN_TO_BB_COEX	
61 57 53	50_UAT_WLAN_5G_WEST	50_UAT_WLAN_5G_WEST	
61 57 53	50_UAT_WLAN_2G_EAST	50_UAT_WLAN_2G_EAST	
61 57 53	50_UAT_WLAN_5G_EAST	50_UAT_WLAN_5G_EAST	
60 57 53	50_WLAN_G_1	50_WLAN_G_1	
60 57 53	50_WLAN_A_1	50_WLAN_A_1	
61 58 53	50_UAT2_M	50_UAT2_M	

Cellular

I33 — RADIO_MLB

27 26 25 23 21 19 18 10 9 4 / 40 39 37 35 34 33 31 30 28	PP_VDD_MAIN	PP_VDD_MAIN	
46 41 40 37 36 32 21 20 18 16 / 60 59 58 55 53 52 48 47	PP1V8_SDRAM	PP1V8_SDRAM	
65 38 37 32 30 25 23 19	PP_VDD_BOOST	PP_VDD_BOOST_RF	
65 20	BBPMU_TO_PMU_AMUX1	BBPMU_TO_PMU_AMUX1	
65 20	BBPMU_TO_PMU_AMUX2	BBPMU_TO_PMU_AMUX2	
69 20	BBPMU_TO_PMU_AMUX3	BBPMU_TO_PMU_AMUX3	
	NC		
Opposite polarity on Karoo --> 64 12	AP_TO_BBPMU_RADIO_ON_L	AP_TO_BBPMU_RADIO_ON_L	
64 20	PMU_TO_BBPMU_RESET_L	PMU_TO_BBPMU_RESET_L	
64 12	AP_TO_BB_RESET_L	AP_TO_BB_RESET_L	
		BB_TO_AP_RESET_ACT_L	
68 12	BB_TO_AP_RESET_DETECT_L	BB_TO_AP_RESET_DETECT_L	
68 46 37 20	BB_TO_STROBE_DRIVER_GSM_BURST_IND	BB_TO_AP_GSM_TXBURST	
68 12	AP_TO_BB_MESA_ON	AP_TO_BB_GYRO_FORCE_PWM	
68 12	AP_TO_BB_TIME_MARK	AP_TO_BB_TIME_MARK	
68 12	AP_TO_BB_COREDUMP	AP_TO_BB_COREDUMP_TRIG	
64 39 23 20 13	LCM_TO_MANY_BSYNC	TOUCH_TO_BBPMU_FORCE_PWM	
68 12	AP_TO_BB_IPC_GPIO1	AP_TO_BB_MESA_ON	
		AP_TO_BB_IPC_GPIO2	
67 52	90_PCIE_AP_TO_BB_REFCLK_P	100_PCIE_AP_TO_BB_REFCLK_P	
67 52	90_PCIE_AP_TO_BB_REFCLK_N	100_PCIE_AP_TO_BB_REFCLK_N	
67 52	90_PCIE_AP_TO_BB_TXD_P	100_PCIE_AP_TO_BB_TX_P	
67 52	90_PCIE_AP_TO_BB_TXD_N	100_PCIE_AP_TO_BB_TX_N	
67 52	90_PCIE_BB_TO_AP_RXD_P	100_PCIE_BB_TO_AP_RX_P	
67 52	90_PCIE_BB_TO_AP_RXD_N	100_PCIE_BB_TO_AP_RX_N	
68 52	PCIE_AP_TO_BB_RESET_L	PCIE_AP_TO_BB_PERST_L	
68 52	PCIE_BB_BI_AP_CLKREQ_L	PCIE_AP_BI_BB_CLKREQ_L	
68 20	BB_TO_PMU_PCIE_HOST_WAKE_L	PCIE_BB_TO_PMU_WAKE_L	
		UART_AP_TO_BB_TXD	
		UART_BB_TO_AP_RXD	
68 13	UART_AOP_TO_BB_TXD	UART_AOP_TO_BB_TXD	
68 13	UART_BB_TO_AOP_RXD	UART_BB_TO_AOP_RXD	
		UART_AOP_TO_GNSS_TXD	
		UART_GNSS_TO_AOP_RXD	
68 11	I2S_AP_TO_BB_BCLK	I2S_AP_TO_BB_BCLK	
68 11	I2S_BB_TO_AP_LRCLK	I2S_AP_TO_BB_LRCLK	
68 11	I2S_AP_TO_BB_DOUT	I2S_AP_TO_BB_DOUT	
68 11	I2S_BB_TO_AP_DIN	I2S_BB_TO_AP_DIN	
68 60 53	UART_BB_TO_WLAN_COEX	UART_BB_TO_WLAN_COEX	
68 60 53	UART_WLAN_TO_BB_COEX	UART_WLAN_TO_BB_COEX	
81 55 53	NFC_SWP	NFC_SWP	
64 55 53	NFC_TO_BB_CLK_REQ	NFC_TO_BB_CLKREQ	
64 55 53	BB_TO_NFC_CLK	BB_TO_NFC_CLK	
78 55 53	NFC_SWP_MUX	NFC_SWP_MUX	
78 55 53	SE2_READY	SE2_READY	
12 AP_TO_ICEFALL_FW_DWLD_REQ — 78	AP_TO_ICEFALL_FW_DWLD_REQ (MAKE_BASE=TRUE)	AP_TO_ICEFALL_FW_DWLD	
78 55 53	SE2_PWR_REQ	SE2_PWR_REQ	
81 55 53	SE2_PRESENT	SE2_PRESENT	
78 55 53	ICEFALL_LDO_ENABLE	ICEFALL_LDO_ENABLE	
67 36 17 13	SWD_AP_TO_MANY_SWCLK	SWD_AP_TO_BB_CLK	
67 13	SWD_AOP_BI_BB_SWDIO	SWD_AP_BI_BB_IO	
64 20	PMU_TO_BB_USB_VBUS_DETECT	USB_BB_VBUS	
67 40	90_USB_BB_DATA_P	90_USB_BB_P	
67 40	90_USB_BB_DATA_N	90_USB_BB_N	
76 57 53	50_UAT_WLAN_2G_WEST_PLEXER	50_UAT_WLAN_2G_WEST_PLEXER	
73 57 53	50_UAT_LB_MLB_SOUTH	50_UAT_LB_MLB_SOUTH	
73 57 53	50_UAT_MB_HB_SOUTH	50_UAT_MB_HB_SOUTH	
75 57 53	50_UUAT_LB_MLB_NORTH	50_UUAT_LB_MLB_NORTH	
75 57 53	50_UAT1_WEST	50_UAT1_WEST	
68 58 53	BB_TO_UAT_SCLK (MAKE_BASE=TRUE)	UAT_RFFE_CLK	
68 58 53	BB_TO_UAT_DATA (MAKE_BASE=TRUE)	UAT_RFFE_DATA	
76 58 53	50_UAT1_TUNER	50_UAT1_TUNER	
68 58 53	BUFFER_GPO1	BUFFER_GPO1	
Per JimYang 3/17, D11 only, NC BUFFER_GPO2	NC	BUFFER_GPO2	
68 58 53 41	BB_TO_LAT_ANT_SCLK	LAT_RFFE_CLK	
68 58 53 41	BB_TO_LAT_ANT_DATA	LAT_RFFE_DATA	
68 41	BB_TO_LAT_GPO1	RFFE_GPO1	
68 41	BB_TO_LAT_GPO2	RFFE_GPO2	
68 46	BB_TO_LAT_GPO3	RFFE_GPO3	
		PMU_TO_GNSS_EN	
		UART_AP_TO_GNSS_TXD	
		UART_GNSS_TO_AP_RXD	
		UART_AP_TO_GNSS_RTS_L	
		UART_GNSS_TO_AP_CTS_L	
		GNSS_TO_PMU_HOST_WAKE	
		AP_TO_GNSS_TIME_MARK	

FF SPECIFIC

T16 — RADIO_MLB_FF

60 57 53	50_WLAN_A_1	50_WLAN_A_1	
60 57 53	50_WLAN_G_1	50_WLAN_G_1	
61 57 53	50_UAT_WLAN_5G_EAST	50_UAT_WLAN_5G_EAST	
61 57 53	50_UAT_WLAN_2G_EAST	50_UAT_WLAN_2G_EAST	
61 57 53	50_UAT_WLAN_5G_WEST	50_UAT_WLAN_5G_WEST	
61 58 53	50_UAT2_M	50_UAT2_M	
		50_UAT_WLAN_2G_WEST_PLEXER	53 57 76
		50_UUAT_LB_MLB_NORTH	53 57 75
		50_UAT_MB_HB_SOUTH	53 57 73
		50_UAT_LB_MLB_SOUTH	53 57 73
		50_UAT1_WEST	53 57 75
		50_UAT1_TUNER	53 58 76
		PP3V0_TRISTAR_ANT_PROX	19 29 40 41 58
		PP1V8_SDRAM	19 18 20 21 32 36 37 40 41 46 / 47 48 52 53 55 58 60 68
		BB_TO_UAT_SCLK	53 58 68
27 26 25 23 21 19 18 10 9 4 / 47 40 39 37 35 34 33 31 30 28	PP_VDD_MAIN	BB_TO_UAT_DATA	53 58 68
		BUFFER_GPO1	53 58 68
		BB_TO_LAT_ANT_SCLK	41 53 58 68
		BB_TO_LAT_ANT_DATA	41 53 58 68

PP5304 (P2MM-NSM SM, ROOM=UAT_DEBUG) — PP5301 (P2MM-NSM SM, ROOM=UAT_DEBUG) — PP5302 (P2MM-NSM SM, ROOM=UAT_DEBUG) — PP5303 (P2MM-NSM SM, ROOM=UAT_DEBUG)

NFC

T10 — STOCKHOLM_MLB

27 26 25 23 21 19 18 10 9 4 / 40 39 37 35 34 33 31 30 28	PP_VDD_MAIN	PP_VDD_MAIN
46 41 40 37 36 32 21 20 18 16 / 68 60 58 55 53 52 48 47	PP1V8_SDRAM	PP1V8_SDRAM
55 20	PMU_TO_NFC_EN	PMU_TO_NFC_EN
64 55 53	BB_TO_NFC_CLK	BB_TO_NFC_CLK
64 55 53	NFC_TO_BB_CLK_REQ	NFC_TO_BB_CLK_REQ
55 12	AP_TO_NFC_FW_DWLD_REQ	AP_TO_NFC_FW_DWLD
55 12	AP_TO_NFC_DEV_WAKE	AP_TO_NFC_DEV_WAKE
55 20	NFC_TO_PMU_HOST_WAKE	NFC_TO_PMU_HOST_WAKE
55 12	UART_AP_TO_NFC_TXD	UART_AP_TO_NFC_TXD
55 12	UART_NFC_TO_AP_RXD	UART_NFC_TO_AP_RXD
55 12	UART_AP_TO_NFC_RTS_L	UART_AP_TO_NFC_RTS_L
55 12	UART_NFC_TO_AP_CTS_L	UART_NFC_TO_AP_CTS_L
81 55 53	NFC_SWP	NFC_SWP
78 55 53	SE2_READY	SE2_READY
78 55 53	SE2_PWR_REQ	SE2_PWR_REQ
81 55 53	SE2_PRESENT	SE2_PRESENT
78 55 53	NFC_SWP_MUX	NFC_SWP_MUX
78 55 53	ICEFALL_LDO_ENABLE	ICEFALL_LDO_ENABLE

SYNC_MASTER=david-copy SYNC_DATE=03/01/2016

PAGE TITLE: CELL,WIFI,NFC

Apple Inc.

DRAWING NUMBER: 051-00482 SIZE: D

REVISION: 8.0.0

BRANCH

PAGE: 53 OF 53

SHEET: 53 OF 81

NOTICE OF PROPRIETARY PROPERTY:
THE INFORMATION CONTAINED HEREIN IS THE PROPRIETARY PROPERTY OF APPLE INC.
THE POSESSOR AGREES TO THE FOLLOWING:
I TO MAINTAIN THIS DOCUMENT IN CONFIDENCE
II NOT TO REPRODUCE OR COPY IT
III NOT TO REVEAL OR PUBLISH IT IN WHOLE OR PART
IV ALL RIGHTS RESERVED

1. ALL RESISTANCE VALUES ARE IN OHMS, 0.1 WATT +/- 5%.
2. ALL CAPACITANCE VALUES ARE IN MICROFARADS.
3. ALL CRYSTALS & OSCILLATOR VALUES ARE IN HERTZ.

REV	ECN	DESCRIPTION OF REVISION	CK APPD / DATE
8	0006532879	ENGINEERING RELEASED	2016-07-06

STOCKHOLM_MLB
JUNE 22, 2016

2		PP_VDD_MAIN
2	IN	PP1V8_SDRAM
2	IN	PMU_TO_NFC_EN
2	OUT	NFC_TO_PMU_HOST_WAKE
2	IN	AP_TO_NFC_DEV_WAKE
2	IN	AP_TO_NFC_FW_DWLD_REQ
2	OUT	NFC_TO_BB_CLK_REQ
2	IN	BB_TO_NFC_CLK
2	IN	UART_AP_TO_NFC_TXD
2	OUT	UART_NFC_TO_AP_RXD
2	IN	UART_AP_TO_NFC_RTS_L
2	OUT	UART_NFC_TO_AP_CTS_L
2	IO	NFC_SWP
2	IN	SE2_READY
2	IN	SE2_PWR_REQ
2	IN	SE2_PRESENT
2	OUT	NFC_SWP_MUX
2	OUT	ICEFALL_LDO_ENABLE

ALTERNATES

PART NUMBER	ALTERNATE FOR PART NUMBER	REFERENCE DESIGNATOR(S)	DESCRIPTION	BOM OPTION
132S0436	132S0400	C7504_RF	0.22UF 20% 6.3V 01005	

PART#	QTY	DESCRIPTION	REFERENCE DESIGNATOR(S)	CRITICAL	BOM OPTION
353S01007	1	ONSEMI,IC LOAD SWITCH, WLCSP4	NFCSW_RF	CRITICAL	

BOM OPTIONS

PART#	QTY	DESCRIPTION	REFERENCE DESIGNATOR(S)	BOM OPTION
131S0883	1	220PF, 0201 2% 50V	C7514_RF	D101
131S00055	1	22PF, 0201 2% 50V	C7512_RF	D101
131S00117	1	120PF, 0201 2% 50V	C7518_RF	D101
131S00026	1	820PF, 0201 2% 50V	C7516_RF	D101
131S0883	1	220PF, 0201 2% 50V	C7514_RF	D10_JP
131S00055	1	22PF, 0201 2% 50V	C7512_RF	D10_JP
131S00019	1	150PF, 0201 2% 50V	C7518_RF	D10_JP
131S0825	1	560PF, 0201 2% 50V	C7516_RF	D10_JP
131S0883	1	220PF, 0201 2% 50V	C7514_RF	D10_ROW
131S00055	1	22PF, 0201 2% 50V	C7512_RF	D10_ROW
131S00117	1	120PF, 0201 2% 50V	C7518_RF	D10_ROW
131S00026	1	820PF, 0201 2% 50V	C7516_RF	D10_ROW

PART#	QTY	DESCRIPTION	REFERENCE DESIGNATOR(S)	BOM OPTION
131S00081	1	270PF, 0201 2% 25V	C7514_RF	D111
131S00118	1	180PF, 0201 2% 50V	C7518_RF	D111
131S00033	1	680PF, 0201 2% 50V	C7516_RF	D111
131S00081	1	270PF, 0201 2% 25V	C7514_RF	D11_JP
131S0731	1	100PF, 0201 2% 50V	C7518_RF	D11_JP
131S00033	1	680PF, 0201 2% 50V	C7516_RF	D11_JP
131S00081	1	270PF, 0201 2% 25V	C7514_RF	D11_ROW
131S00118	1	180PF, 0201 2% 50V	C7518_RF	D11_ROW
131S00033	1	680PF, 0201 2% 50V	C7516_RF	D11_ROW

page1

DRAWING TITLE: SCH,MLB,D11

Apple Inc.

DRAWING NUMBER: 051-00482 SIZE: D

REVISION: 8.0.0

BRANCH

PAGE: 1 OF 75

SHEET: 54 OF 81

NOTICE OF PROPRIETARY PROPERTY:
THE INFORMATION CONTAINED HEREIN IS THE PROPRIETARY PROPERTY OF APPLE INC.
THE POSESSOR AGREES TO THE FOLLOWING:
I TO MAINTAIN THIS DOCUMENT IN CONFIDENCE
II NOT TO REPRODUCE OR COPY IT
III NOT TO REVEAL OR PUBLISH IT IN WHOLE OR PART
IV ALL RIGHTS RESERVED

STOCKHOLM

5V BOOSTER

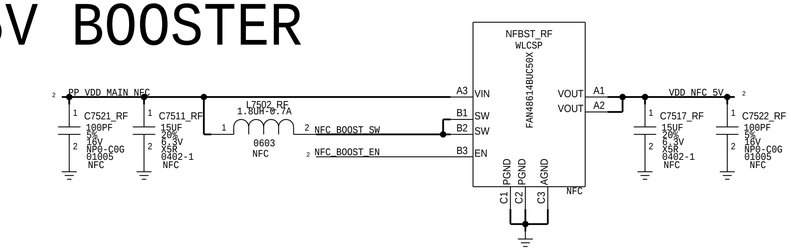

NFC CONTROLLER

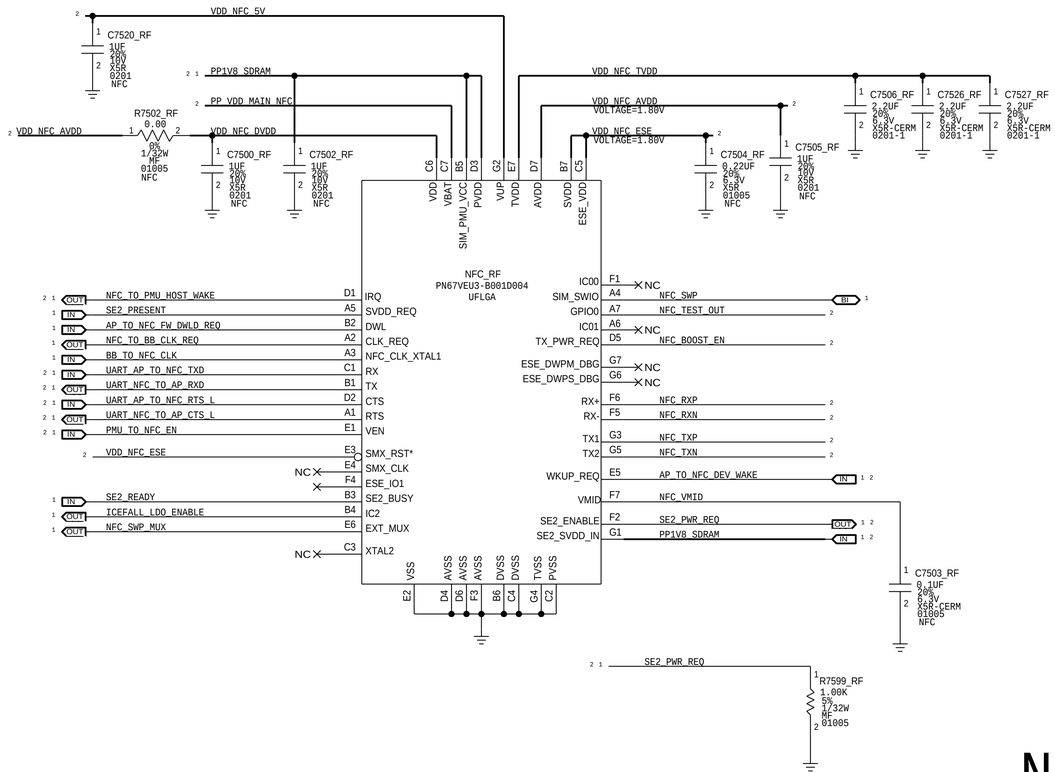

NFC FRONT END

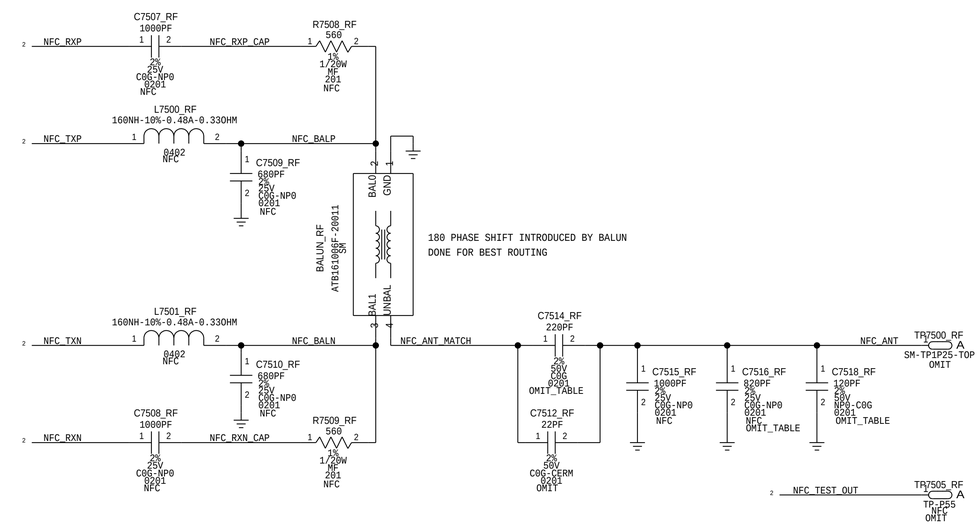

NFC LOAD SWITCH

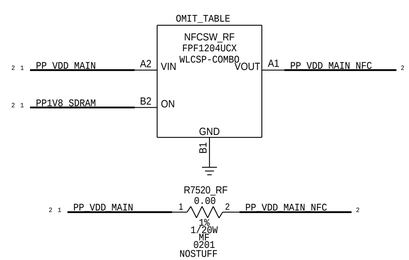

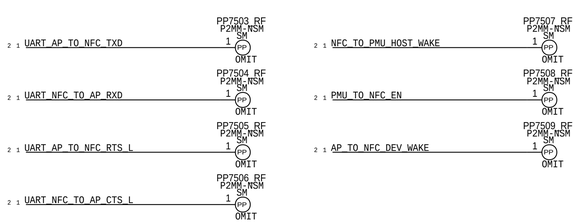

PAGE TITLE	NFC
Apple Inc.	DRAWING NUMBER 051-00482 SIZE D
	REVISION 8.0.0
NOTICE OF PROPRIETARY PROPERTY:	BRANCH
THE INFORMATION CONTAINED HEREIN IS THE PROPRIETARY PROPERTY OF APPLE INC. THE POSESSOR AGREES TO THE FOLLOWING: I TO MAINTAIN THIS DOCUMENT IN CONFIDENCE II NOT TO REPRODUCE OR COPY IT III NOT TO REVEAL OR PUBLISH IT IN WHOLE OR PART IV ALL RIGHTS RESERVED	PAGE 75 OF 75
	SHEET 55 OF 81

1. ALL RESISTANCE VALUES ARE IN OHMS, 0.1 WATT +/- 5%.
2. ALL CAPACITANCE VALUES ARE IN MICROFARADS.
3. ALL CRYSTALS & OSCILLATOR VALUES ARE IN HERTZ.

REV	ECN	DESCRIPTION OF REVISION	CK APPD / DATE
8	0006532879	ENGINEERING RELEASED	2016-07-06

D11 RADIO_MLB_FF
FEB 05, 2016

PDF PAGE	CONTENTS
2	METROCIRC

LMBRF:

152S2001	1	2.4NH,600MA,0201	L8008_RF	CRITICAL	LMBRF
152S0983	1	6.8NH,2%,1.5A,0.055OHM,0402	L8009_RF	CRITICAL	LMBRF

NOLMBRF:

PART#	QTY	DESCRIPTION	REFERENCE DESIGNATOR(S)	CRITICAL	BOM OPTION
152S2024	1	1.4NH,1.1A,0201	L8008_RF	CRITICAL	NOLMBRF
152S00610	1	3.6NH,2%,1.7A,0.045OHM,0402	L8009_RF	CRITICAL	NOLMBRF

?

DRAWING TITLE: SCH,MLB,D11

Apple Inc.

DRAWING NUMBER: 051-00482 SIZE: D

REVISION: 8.0.0

BRANCH:

PAGE: 1 OF 3

SHEET: 56 OF 81

NOTICE OF PROPRIETARY PROPERTY:
THE INFORMATION CONTAINED HEREIN IS THE PROPRIETARY PROPERTY OF APPLE INC.
THE POSESSOR AGREES TO THE FOLLOWING:
I TO MAINTAIN THIS DOCUMENT IN CONFIDENCE
II NOT TO REPRODUCE OR COPY IT
III NOT TO REVEAL OR PUBLISH IT IN WHOLE OR PART
IV ALL RIGHTS RESERVED

METROCIRC

D11 NORTH-SOUTH METROCIRC 339S00147

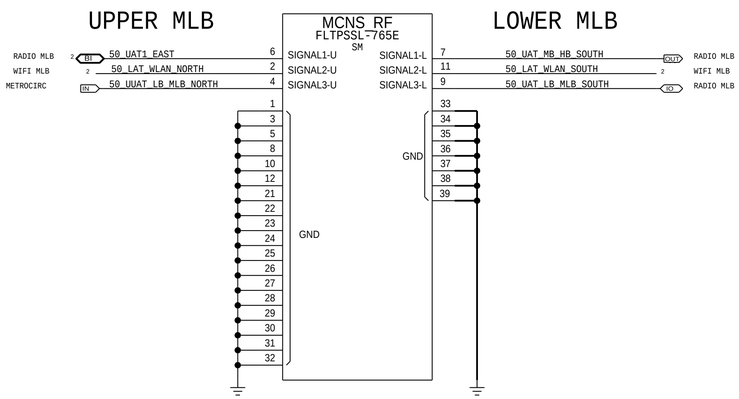

D11 EAST-WEST METROCIRC 339S00146

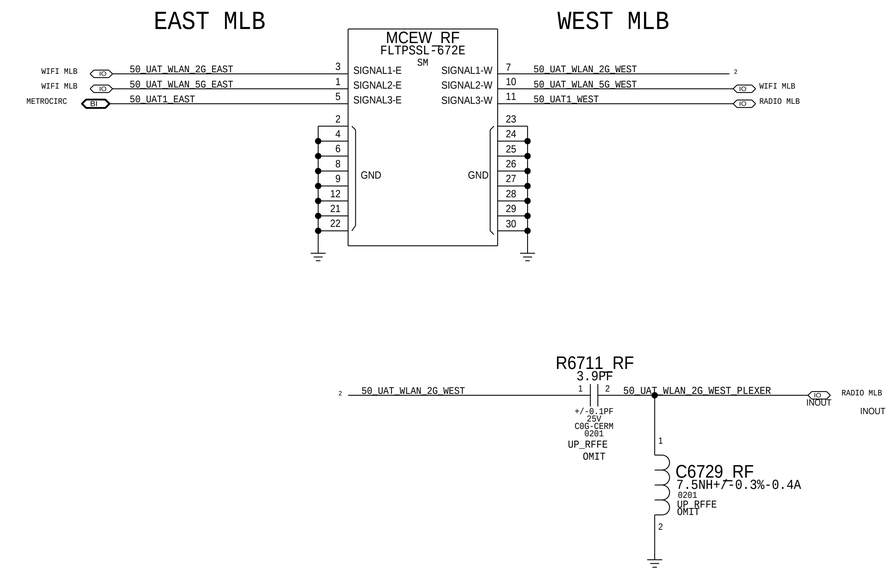

WIFI LOWER ANTENNA FEED

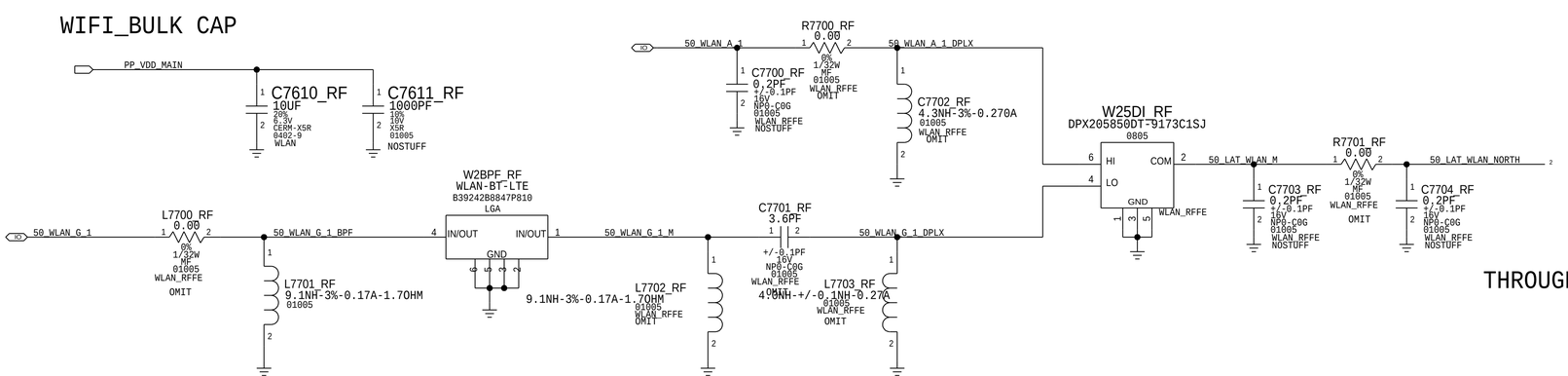

COAX

THROUGH METROCIRC

PAGE TITLE	METROCIRC [2]
Apple Inc.	DRAWING NUMBER 051-00482 SIZE D
	REVISION 8.0.0
NOTICE OF PROPRIETARY PROPERTY:	BRANCH
THE INFORMATION CONTAINED HEREIN IS THE PROPRIETARY PROPERTY OF APPLE INC. THE POSESSOR AGREES TO THE FOLLOWING: I TO MAINTAIN THIS DOCUMENT IN CONFIDENCE II NOT TO REPRODUCE OR COPY IT III NOT TO REVEAL OR PUBLISH IT IN WHOLE OR PART IV ALL RIGHTS RESERVED	PAGE 2 OF 3
	SHEET 57 OF 81

UAT TUNER FLEX

PLEASE CONTACT ANTENNA (MATT MOW)
FOR ANY COMPONENT CHANGE.

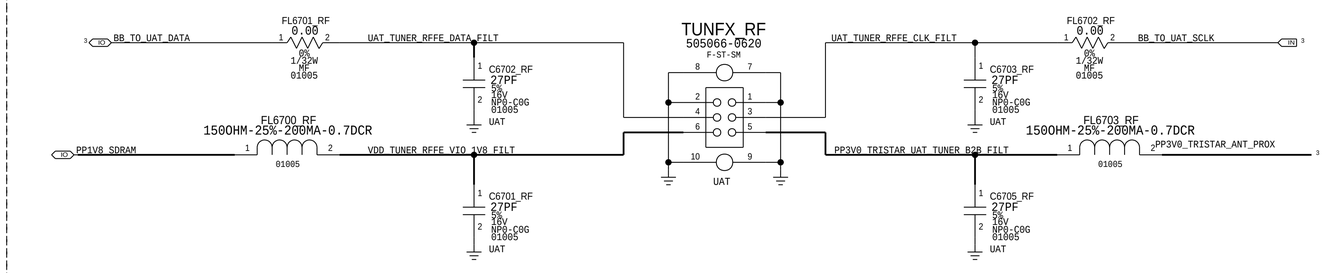

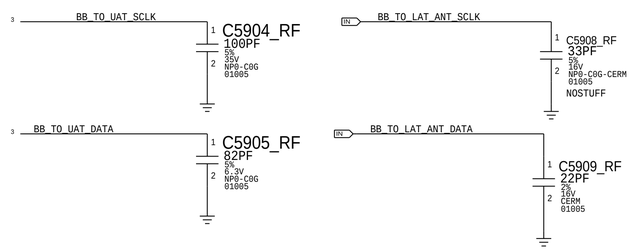

ALT UAT1 GND

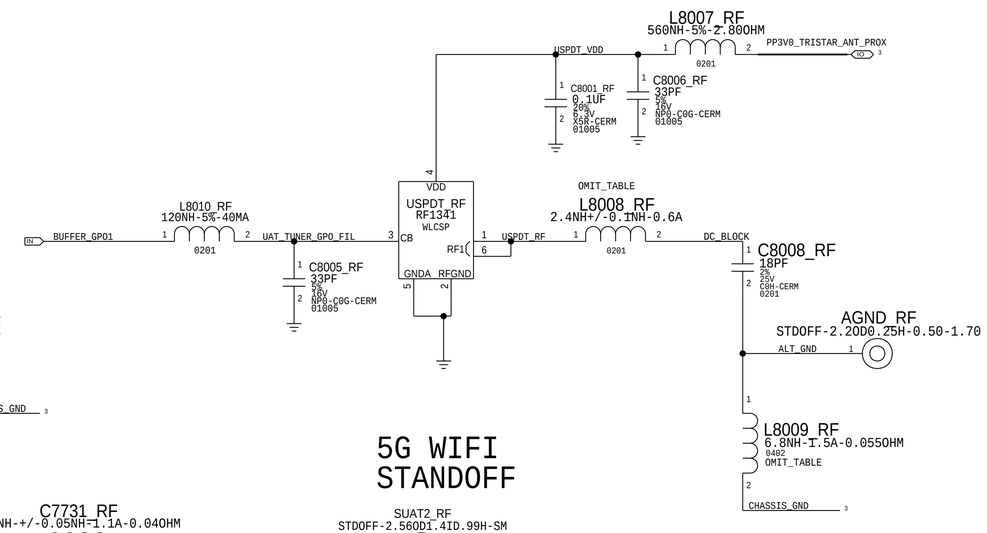

LB/MLB/GNSS/MB/HB STANDOFF

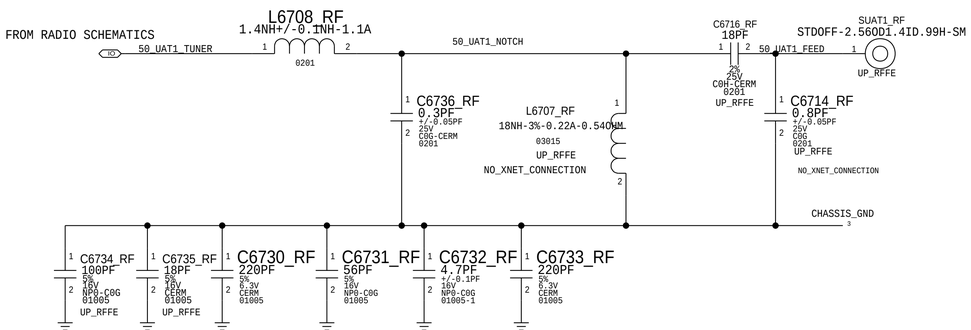

5G WIFI STANDOFF

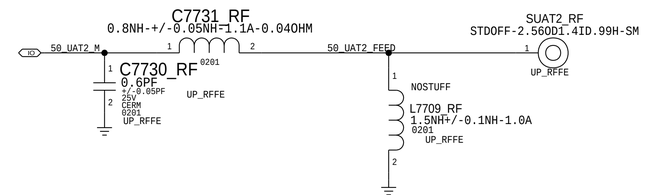

PAGE TITLE	UAT MATCH AND TUNER [3]
Apple Inc.	DRAWING NUMBER 051-00482 SIZE D
	REVISION 8.0.0
	BRANCH
	PAGE 3 OF 3
	SHEET 58 OF 81

NOTICE OF PROPRIETARY PROPERTY:
THE INFORMATION CONTAINED HEREIN IS THE PROPRIETARY PROPERTY OF APPLE INC.
THE POSESSOR AGREES TO THE FOLLOWING:
I TO MAINTAIN THIS DOCUMENT IN CONFIDENCE
II NOT TO REPRODUCE OR COPY IT
III NOT TO REVEAL OR PUBLISH IT IN WHOLE OR PART
IV ALL RIGHTS RESERVED

1. ALL RESISTANCE VALUES ARE IN OHMS, 0.1 WATT +/- 5%.
2. ALL CAPACITANCE VALUES ARE IN MICROFARADS.
3. ALL CRYSTALS & OSCILLATOR VALUES ARE IN HERTZ.

REV	ECN	DESCRIPTION OF REVISION	CK APPD / DATE
8	0006532879	ENGINEERING RELEASED	2016-07-06

D1X WIFI_MLB (PERENNIAL)
FEBRUARY 1, 2016

PDF PAGE	CSA PAGE	CONTENTS
2	76	PERENNIAL
3	77	WIFI FRONT-END

POWER

2 IN PP_VDD_MAIN
2 IN PP1V8_SDRAM

CLOCKS

2 IN PMUGPIO_TO_WLAN_CLK32K

CONTROL

2 IN PMU_TO_WLAN_REG_ON
2 IN PMU_TO_BT_REG_ON
2 OUT BT_TO_PMU_HOST_WAKE
2 IN AP_TO_BT_WAKE

WLAN PCIE

2 IN 90_PCIE_AP_TO_WLAN_REFCLK_P
2 IN 90_PCIE_AP_TO_WLAN_REFCLK_N
2 IN 90_PCIE_AP_TO_WLAN_TXD_P
2 IN 90_PCIE_AP_TO_WLAN_TXD_N
2 OUT 90_PCIE_WLAN_TO_AP_RXD_P
2 OUT 90_PCIE_WLAN_TO_AP_RXD_N
2 IN PCIE_AP_TO_WLAN_RESET_L
2 IO PCIE_WLAN_BI_AP_CLKREQ_L
2 OUT WLAN_TO_PMU_HOST_WAKE
2 IN AP_TO_WLAN_DEVICE_WAKE

WLAN UART

2 OUT UART_WLAN_TO_AP_RXD
2 IN UART_AP_TO_WLAN_TXD
2 OUT UART_WLAN_TO_AP_CTS_L
2 IN UART_AP_TO_WLAN_RTS_L

BLUETOOTH UART

2 IN UART_AP_TO_BT_TXD
2 OUT UART_BT_TO_AP_RXD
2 IN UART_AP_TO_BT_RTS_L
2 OUT UART_BT_TO_AP_CTS_L

AOP

2 IN AOP_TO_WLAN_CONTEXT_A
2 IN AOP_TO_WLAN_CONTEXT_B

AUDIO

2 IN I2S_AP_TO_BT_BCLK
2 IN I2S_AP_TO_BT_LRCLK
2 OUT I2S_BT_TO_AP_DIN
2 IN I2S_AP_TO_BT_DOUT

COEX

2 IN UART_BB_TO_WLAN_COEX
2 OUT UART_WLAN_TO_BB_COEX

ANTENNA

3 IO 50_UAT_WLAN_5G_WEST
3 IO 50_UAT_WLAN_2G_EAST
3 IO 50_UAT_WLAN_5G_EAST
2 IO 50_WLAN_G_1
2 IO 50_WLAN_A_1
3 IO 50_UAT2_M

BOM OPTIONS:

D10_JP:

PART#	QTY	DESCRIPTION	REFERENCE DESIGNATOR(S)	CRITICAL	BOM OPTION
131S0648	1	CAP,CER,0.3PF,+/-0.05,01005	C7705_RF	CRITICAL	D10_JP
152S00029	1	IND,1.1NH,UH-Q,01005	R7703_RF	CRITICAL	D10_JP
131S0893	1	CAP,CER,0.2PF,+/-0.05,01005	C7706_RF	CRITICAL	D10_JP
117S0161	1	RES,MF,0 OHM,1/32W,01005	R7711_RF	CRITICAL	D10_JP
117S0161	1	RES,MF,0 OHM,1/32W,01005	R7702_RF	CRITICAL	D10_JP
152S1980	1	IND,1.0NH,UH-Q,01005	R7704_RF	CRITICAL	D10_JP
131S0404	1	CAP,3.9PF,+/-1.0PF,01005	R6711_RF	CRITICAL	D10_JP
152S2061	1	IND,7.5NH,UH-Q,01005	C6729_RF	CRITICAL	D10_JP
117S0161	1	RES,MF,0 OHM,1/32W,01005	R7700_RF	CRITICAL	D10_JP
152S2043	1	IND,6.2NH,UH-Q,01005	C7702_RF	CRITICAL	D10_JP
152S1998	1 TRUE	IND, 0.8NH,UH-Q,01005	L7700_RF	CRITICAL	D10_JP
152S2043	1	IND,6.2NH,UH-Q,01005	L7701_RF	CRITICAL	D10_JP
152S1853	1	IND,9.1NH,UH-Q,01005	L7702_RF	CRITICAL	D10_JP
131S0401	1	CAP,3.6PF,+/-0.1PF,01005	C7701_RF	CRITICAL	D10_JP
152S00038	1	IND,4.0NH,+/-0.1NH,UH-Q,01005	L7703_RF	CRITICAL	D10_JP
117S0161	1	RES,MF,0 OHM,1/32W,01005	R7701_RF	CRITICAL	D10_JP

NOSTUFF:C7729_RF,C7711_RF,C7709_RF,C7710_RF, C7707_RF, C7708_RF
C7700_RF, C7703_RF,C7704_RF

D10_ROW:

PART#	QTY	DESCRIPTION	REFERENCE DESIGNATOR(S)	CRITICAL	BOM OPTION
131S0648	1	CAP,CER,0.3PF,+/-0.05,01005	C7705_RF	CRITICAL	D10_ROW
152S00029	1	IND,1.1NH,UH-Q,01005	R7703_RF	CRITICAL	D10_ROW
131S0893	1	CAP,CER,0.2PF,+/-0.05,01005	C7706_RF	CRITICAL	D10_ROW
117S0161	TRUE	RES,MF,0 OHM,1/32W,01005	R7711_RF	CRITICAL	D10_ROW
117S0161	TRUE	RES,MF,0 OHM,1/32W,01005	R7702_RF	CRITICAL	D10_ROW
152S1988	TRUE	IND,2.4NH,UH-Q,01005	R7704_RF	CRITICAL	D10_ROW
117S0161	TRUE	RES,MF,0 OHM,1/32W,01005	R6711_RF	CRITICAL	D10_ROW
152S1853	TRUE	IND,9.1NH,UH-Q,01005	C6729_RF	CRITICAL	D10_ROW
117S0161	TRUE	RES,MF,0 OHM,1/32W,01005	R7700_RF	CRITICAL	D10_ROW
152S2043	1	IND,6.2NH,UH-Q,01005	C7702_RF	CRITICAL	D10_ROW
152S1998	1 TRUE	IND, 0.8NH,UH-Q,01005	L7700_RF	CRITICAL	D10_ROW
152S2043	1	IND,6.2NH,UH-Q,01005	L7701_RF	CRITICAL	D10_ROW
152S1853	1	IND,9.1NH,UH-Q,01005	L7702_RF	CRITICAL	D10_ROW
131S0401	1	CAP,3.6PF,+/-0.1PF,01005	C7701_RF	CRITICAL	D10_ROW
152S00038	TRUE	IND,4.0NH,+/-0.1NH,UH-Q,01005	L7703_RF	CRITICAL	D10_ROW
117S0161	1	RES,MF,0 OHM,1/32W,01005	R7701_RF	CRITICAL	D10_ROW

NOSTUFF:C7729_RF,C7711_RF,C7709_RF,C7710_RF, C7707_RF, C7708_RF
C7700_RF, C7703_RF,C7704_RF

D101_WIFI:

PART#	QTY	DESCRIPTION	REFERENCE DESIGNATOR(S)	CRITICAL	BOM OPTION
131S0648	1	CAP,CER,0.3PF,+/-0.05,01005	C7705_RF	CRITICAL	D101
152S00029	1	IND,1.1NH,UH-Q,01005	R7703_RF	CRITICAL	D101
131S0893	1	CAP,CER,0.2PF,+/-0.05,01005	C7706_RF	CRITICAL	D101
117S0161	1	RES,MF,0 OHM,1/32W,01005	R7711_RF	CRITICAL	D101
117S0161	1	RES,MF,0 OHM,1/32W,01005	R7702_RF	CRITICAL	D101
152S1988	TRUE 1	IND,2.4NH,UH-Q,01005	R7704_RF	CRITICAL	D101
131S0648	TRUE 1	CAP,CER,0.3PF,+/-0.05PF,01005	C7708_RF	CRITICAL	D101
118S0724	TRUE 1	RES,MF, 0 OHM,1/20W, 0201	R6711_RF	CRITICAL	D101
152S2054	TRUE 1	IND,9.1NH,UH-Q,0201	C6729_RF	CRITICAL	D101
117S0161	1	RES,MF,0 OHM,1/32W,01005	R7700_RF	CRITICAL	D101
152S2043	TRUE 1	IND,6.2NH,UH-Q,01005	C7702_RF	CRITICAL	D101
152S1998	1 TRUE	IND, 0.8NH,UH-Q,01005	L7700_RF	CRITICAL	D101
152S2043	1	IND,6.2NH,UH-Q,01005	L7701_RF	CRITICAL	D101
152S1853	1	IND,9.1NH,UH-Q,01005	L7702_RF	CRITICAL	D101
131S0401	1	CAP,3.6PF,+/-0.1PF,01005	C7701_RF	CRITICAL	D101
152S00038	1	IND,4.0NH,+/-0.1NH,UH-Q,01005	L7703_RF	CRITICAL	D101
117S0161	1	RES,MF,0 OHM,1/32W,01005	R7701_RF	CRITICAL	D101

NOSTUFF: C7729_RF,C7711_RF,C7709_RF,C7710_RF, C7707_RF
C7700_RF, C7703_RF,C7704_RF

D11_JP:

PART#	QTY	DESCRIPTION	REFERENCE DESIGNATOR(S)	CRITICAL	BOM OPTION
152S00273	TRUE	IND,0.6NH,UH-Q,01005	R7703_RF	CRITICAL	D11_JP
152S1976	TRUE	IND,0.7NH,UH-Q,01005	R7711_RF	CRITICAL	D11_JP
131S0400	TRUE	CAP,CER,3.5PF+/-0.1,01005	R7702_RF	CRITICAL	D11_JP
152S1986	TRUE	IND,FILM,2.2NH,UH-Q,01005	R7704_RF	CRITICAL	D11_JP
131S0648	1	CAP,CER,0.3PF,+/-0.05PF,01005	C7708_RF	CRITICAL	D11_JP
131S0593	TRUE	CAP,3.9PF,+/-1.0PF,0201,HI-Q	R6711_RF	CRITICAL	D11_JP
152S2055	TRUE	IND,7.5NH,UH-Q,0201	C6729_RF	CRITICAL	D11_JP
131S0893	TRUE	CAP,CER,0.2PF,+/-0.05PF,01005	C7705_RF	CRITICAL	D11_JP
131S0893	TRUE	CAP,CER,0.2PF,+/-0.05PF,01005	C7729_RF	CRITICAL	D11_JP
131S0648	TRUE TRUE	CAP,CER,0.3PF,+/-0.05PF,01005	C7700_RF	CRITICAL	D11_JP
152S1980	TRUE	IND,1.0NH,+/-0.1NH,UH-Q,01005	R7700_RF	CRITICAL	D11_JP
131S0648	TRUE	CAP,CER,0.3PF,+/-0.05PF,01005	C7702_RF	CRITICAL	D11_JP
131S0405	1 TRUE	CAP,CER,4.0PF,+/-0.1PF,01005	R7701_RF	CRITICAL	D11_JP
152S00273	1 TRUE	IND,0.6NH,+/-1NH,UH-Q,01005	L7700_RF	CRITICAL	D11_JP
152S1853	1	IND,9.1NH,UH-Q,01005	L7701_RF	CRITICAL	D11_JP
152S1853	1	IND,9.1NH,UH-Q,01005	L7702_RF	CRITICAL	D11_JP
117S0161	1	RES,MF,0 OHM,1/32W,01005	C7701_RF	CRITICAL	D11_JP

NOSTUFF:C7706_RF, C7711_RF,C7709_RF,C7710_RF, C7707_RF
C7703_RF,C7704_RF,L7703_RF

D11_ROW:

PART#	QTY	DESCRIPTION	REFERENCE DESIGNATOR(S)	CRITICAL	BOM OPTION
152S00273	1	IND,0.6NH,UH-Q,01005	R7703_RF	CRITICAL	D11_ROW
152S1976	1	IND,0.7NH,UH-Q,01005	R7711_RF	CRITICAL	D11_ROW
131S0400	1	CAP,CER,3.5PF+/-0.1,01005	R7702_RF	CRITICAL	D11_ROW
152S1986	TRUE 1	IND,FILM,2.2NH,UH-Q,01005	R7704_RF	CRITICAL	D11_ROW
118S0724	TRUE 1	RES,MF,0 OHM,1/20W,0201	R6711_RF	CRITICAL	D11_ROW
152S2054	TRUE 1	IND,9.1NH,UH-Q,0201	C6729_RF	CRITICAL	D11_ROW
131S0893	1	CAP,CER,0.2PF,+/-0.05PF,01005	C7705_RF	CRITICAL	D11_ROW
131S0893	TRUE	CAP,CER,0.2PF,+/-0.05PF,01005	C7729_RF	CRITICAL	D11_ROW
131S0648	TRUE TRUE	CAP,CER,0.3PF,+/-0.05PF,01005	C7700_RF	CRITICAL	D11_ROW
152S1980	TRUE	IND,1.0NH,+/-0.1NH,UH-Q,01005	R7700_RF	CRITICAL	D11_ROW
131S0648	TRUE	CAP,CER,0.3PF,+/-0.05PF,01005	C7702_RF	CRITICAL	D11_ROW
131S0405	1 TRUE	CAP,CER,4.0PF,+/-0.1PF,01005	R7701_RF	CRITICAL	D11_ROW
152S00273	1 TRUE	IND,0.6NH,+/-1NH,UH-Q,01005	L7700_RF	CRITICAL	D11_ROW
152S1853	1	IND,9.1NH,UH-Q,01005	L7701_RF	CRITICAL	D11_ROW
152S1853	1	IND,9.1NH,UH-Q,01005	L7702_RF	CRITICAL	D11_ROW
117S0161	1	RES,MF,0 OHM,1/32W,01005	C7701_RF	CRITICAL	D11_ROW

NOSTUFF:C7706_RF, C7711_RF,C7709_RF,C7710_RF, C7707_RF, C7708_RF
C7703_RF,C7704_RF,L7703_RF

D111_WIFI:

PART#	QTY	DESCRIPTION	REFERENCE DESIGNATOR(S)	CRITICAL	BOM OPTION
152S00273	1	IND,0.6NH,UH-Q,01005	R7703_RF	CRITICAL	D111
152S1976	1	IND,0.7NH,UH-Q,01005	R7711_RF	CRITICAL	D111
131S0400	1	CAP,CER,3.5PF+/-0.1,01005	R7702_RF	CRITICAL	D111
152S1986	TRUE 1	IND,FILM,2.2NH,UH-Q,01005	R7704_RF	CRITICAL	D111
118S0724	TRUE 1	RES,MF, 0 OHM,1/20W, 0201	R6711_RF	CRITICAL	D111
152S2054	TRUE 1	IND,9.1NH,UH-Q,0201	C6729_RF	CRITICAL	D111
131S0893	1	CAP,CER,0.2PF,+/-0.05PF,01005	C7705_RF	CRITICAL	D111
131S0893	TRUE	CAP,CER,0.2PF,+/-0.05PF,01005	C7729_RF	CRITICAL	D111
131S0648	TRUE TRUE	CAP,CER,0.3PF,+/-0.05PF,01005	C7700_RF	CRITICAL	D111
152S1980	TRUE	IND,1.0NH,+/-0.1NH,UH-Q,01005	R7700_RF	CRITICAL	D111
131S0648	TRUE	CAP,CER,0.3PF,+/-0.05PF,01005	C7702_RF	CRITICAL	D111
131S0405	1 TRUE	CAP,CER,4.0PF,+/-0.1PF,01005	R7701_RF	CRITICAL	D111
152S00273	1 TRUE	IND,0.6NH,+/-1NH,UH-Q,01005	L7700_RF	CRITICAL	D111
152S1853	1	IND,9.1NH,UH-Q,01005	L7701_RF	CRITICAL	D111
152S1853	1	IND,9.1NH,UH-Q,01005	L7702_RF	CRITICAL	D111
117S0161	1	RES,MF,0 OHM,1/32W,01005	C7701_RF	CRITICAL	D111

NOSTUFF:C7706_RF, C7711_RF,C7709_RF,C7710_RF, C7707_RF, C7708_RF
C7703_RF,C7704_RF,L7703_RF

WIFI_MLB SCHEMATIC

DRAWING TITLE	SCH,MLB,D11
Apple Inc.	DRAWING NUMBER 051-00482 SIZE D
	REVISION 8.0.0
	BRANCH
	PAGE 1 OF 77
	SHEET 59 OF 81

NOTICE OF PROPRIETARY PROPERTY:
THE INFORMATION CONTAINED HEREIN IS THE PROPRIETARY PROPERTY OF APPLE INC.
THE POSESSOR AGREES TO THE FOLLOWING:
I TO MAINTAIN THIS DOCUMENT IN CONFIDENCE
II NOT TO REPRODUCE OR COPY IT
III NOT TO REVEAL OR PUBLISH IT IN WHOLE OR PART
IV ALL RIGHTS RESERVED

CONFIDENTIAL AND PROPRIETARY APPLE SYSTEM DESIGN. FOR REFERENCE PURPOSE ONLY - NOT A CHANGE REQUEST

WIFI/BT

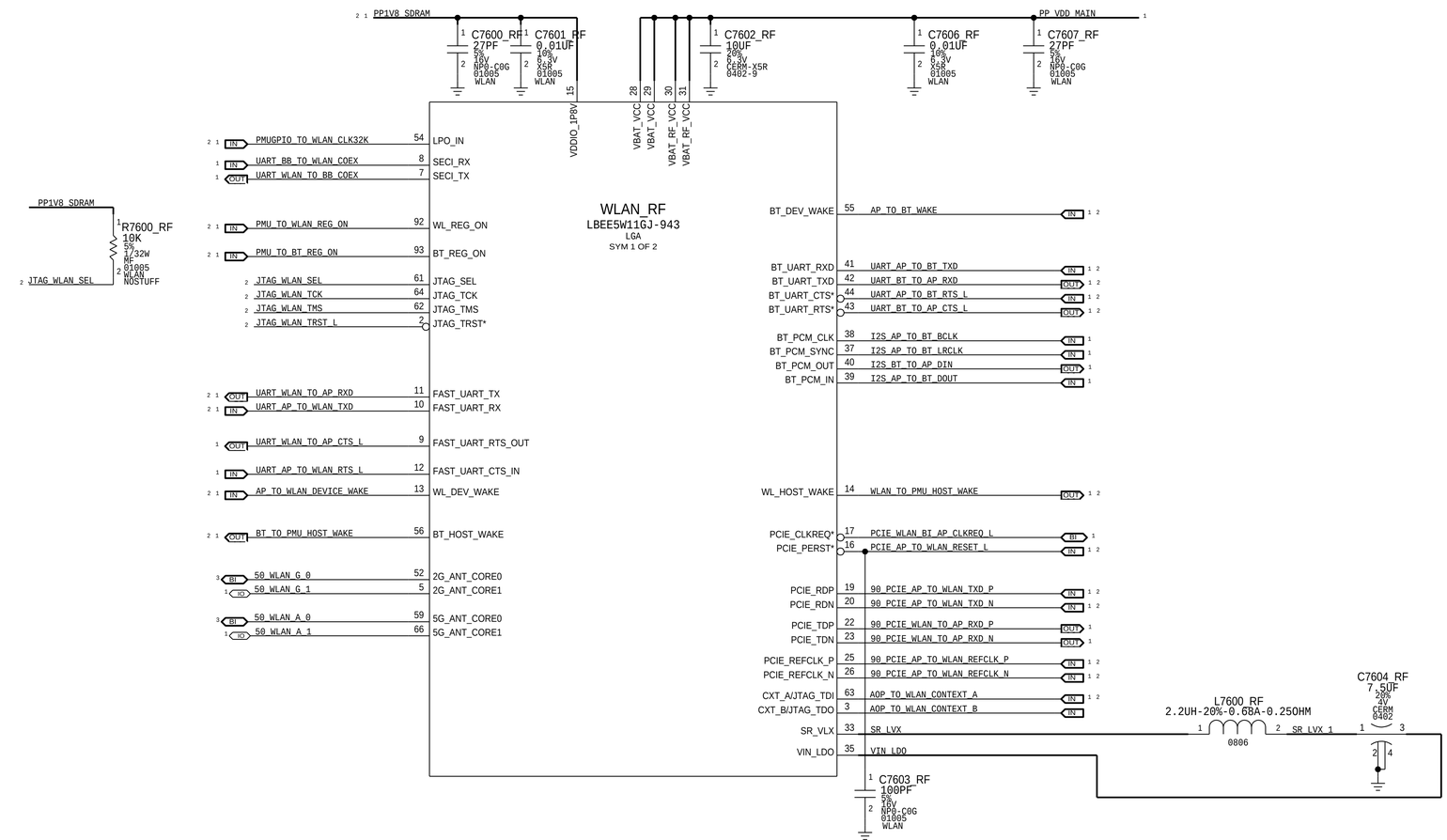

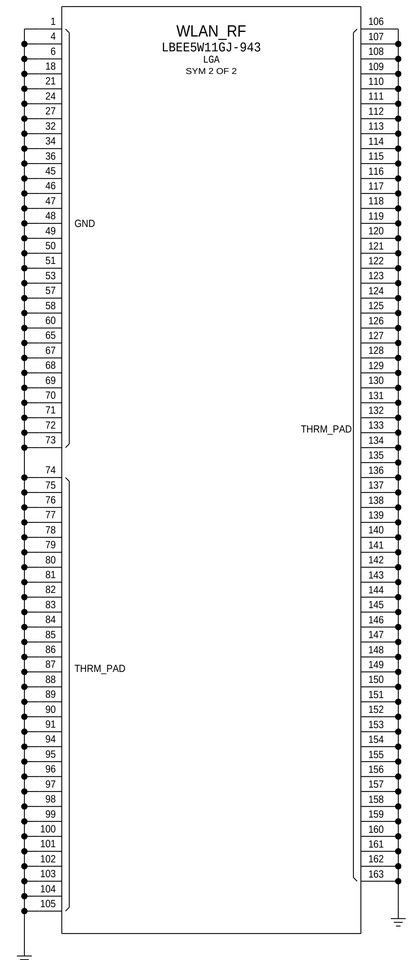

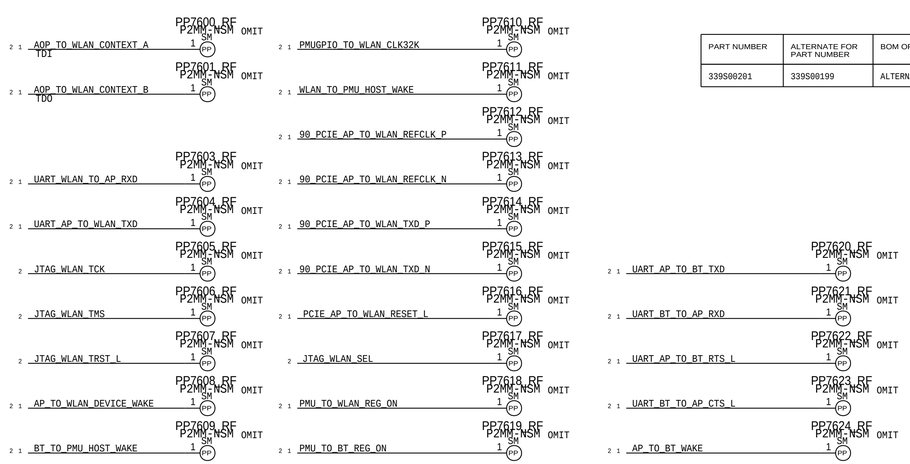

PART NUMBER	ALTERNATE FOR PART NUMBER	BOM OPTION	REF DES	COMMENTS:
339S00201	339S00199	ALTERNATE	WLAN_RF	ALT WIFI/BT MODULE

SYNC_MASTER=WIFI SYNC_DATE=01/30/2014

PAGE TITLE

PERENNIAL

Apple Inc.

DRAWING NUMBER 051-00482 SIZE D

REVISION 8.0.0

BRANCH

PAGE 76 OF 77

SHEET 60 OF 81

NOTICE OF PROPRIETARY PROPERTY:

THE INFORMATION CONTAINED HEREIN IS THE PROPRIETARY PROPERTY OF APPLE INC.
THE POSESSOR AGREES TO THE FOLLOWING:
I TO MAINTAIN THIS DOCUMENT IN CONFIDENCE
II NOT TO REPRODUCE OR COPY IT
III NOT TO REVEAL OR PUBLISH IT IN WHOLE OR PART
IV ALL RIGHTS RESERVED

WIFI UPPER ANTENNA FEEDS

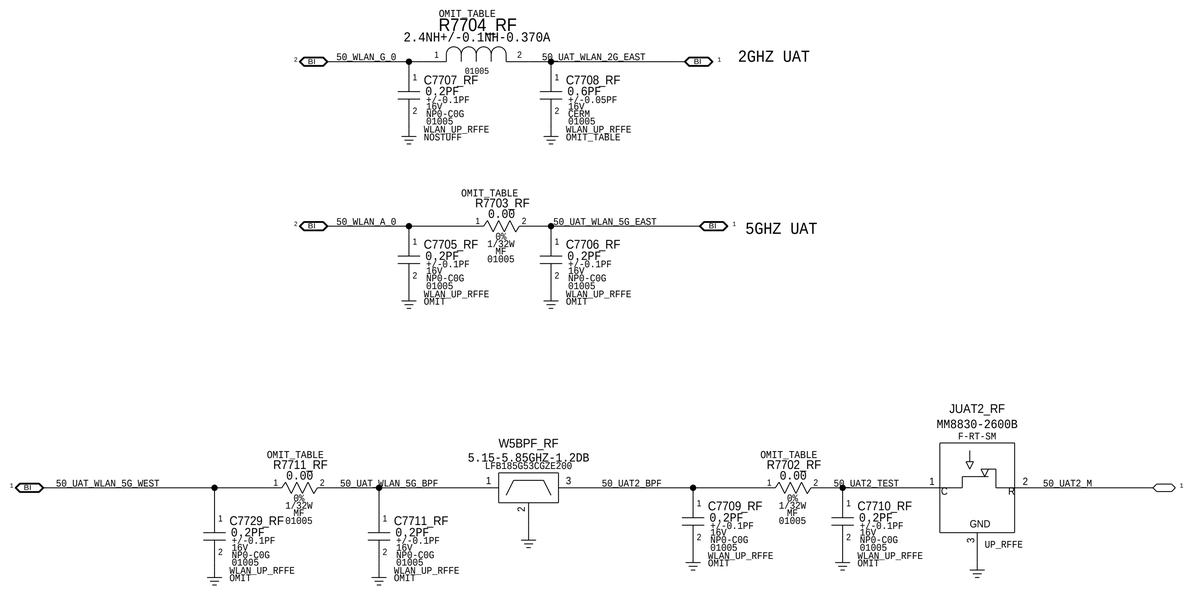

Mr Huy - Vietmobile.vn

PAGE TITLE	WIFI FRONT-END [77]
	Apple Inc.
DRAWING NUMBER	051-00482
SIZE	D
REVISION	8.0.0
BRANCH	
PAGE	77 OF 77
SHEET	61 OF 81

NOTICE OF PROPRIETARY PROPERTY:

THE INFORMATION CONTAINED HEREIN IS THE PROPRIETARY PROPERTY OF APPLE INC.
THE POSESSOR AGREES TO THE FOLLOWING:
I TO MAINTAIN THIS DOCUMENT IN CONFIDENCE
II NOT TO REPRODUCE OR COPY IT
III NOT TO REVEAL OR PUBLISH IT IN WHOLE OR PART
IV ALL RIGHTS RESERVED

81 ICEFALL, SIM, DEBUG_CONN

1. ALL RESISTANCE VALUES ARE IN OHMS, 0.1 WATT +/- 5%.
2. ALL CAPACITANCE VALUES ARE IN MICROFARADS.
3. ALL CRYSTALS & OSCILLATOR VALUES ARE IN HERTZ.

REV	ECN	DESCRIPTION OF REVISION	CK APPD / DATE
8	0006532879	ENGINEERING RELEASED	2016-07-06

MAV16 RADIO_MLB

LAST_MODIFICATION=Wed Jun 29 12:06:01 2016

PAGE	CSA	CONTENTS	SYNC	DATE
62	1	page1	<SYNC_MASTER1>	<SYNC_DATE1>
63	2	BOM_OMIT_TABLE	<SYNC_MASTER2>	<SYNC_DATE2>
64	3	PMU: CONTROL AND CLOCKS	<SYNC_MASTER3>	<SYNC_DATE3>
65	4	PMU: SWITCHERS AND LDOS	<SYNC_MASTER4>	<SYNC_DATE4>
66	5	BASEBAND: POWER2	<SYNC_MASTER5>	<SYNC_DATE5>
67	6	BASEBAND: CONTROL		
68	7	BASEBAND GPIOS		
69	8	TRANSCEIVER0/1: POWER		
70	9	TRANSCEIVER0/1: TX PORTS		
71	10	TRANSCEIVER0/1: PRX PORTS		
72	11	RECEIVE MATCHING		
73	12	LOWER ANTENNA & COUPLERS		
74	13	DIVERSITY RECEIVE ASM'S		
75	14	DIVERSITY RECEIVE LNA'S		
76	15	UPPER ANTENNA FEEDS		
77	16	PMU: ET MODULATOR		
78	17	TEST POINTS & BOOT CONFIG		
79	18	TDD TRANSMIT		
80	19	FDD TRANSMIT		
	20			
	21			
	22			
	23			
	24			
	25			
	26			
	27			<SYNC_DATE27>
	28			
	29			
	30			<SYNC_DATE30>

SCH: 951-00964
BOM: 939-00826

ALTERNATES

PART NUMBER	ALTERNATE FOR PART NUMBER	BOM OPTION	REF DES	COMMENTS:
197S0565	197S0593	ALTERNATE	Y5501_RF	19P2 MHZ XTAL
197S0598	197S0593	ALTERNATE	Y5501_RF	19P2 MHZ XTAL
138S00101	138S00095	ALTERNATE	ALL	TRANSITION CAP
335S00013	335S0894	ALTERNATE	EPROM_RF	IC EEPROM
353S00253	353S00321	ALTERNATE	SWPMX_RF	IC SWITCH SPDT
155S00235	155S00234	ALTERNATE	UPPDI_RF	NOLMBRF

ALL:C5616_RF-C5618_RF,C5632_RF-C5634_RF

AP CONNECTIONS

POWER

20 16 4 3 IN PP_VDD_MAIN

IN PP_VDD_BOOST — PP_VDD_BOOST 4 20
20 7 IN PP1V8_SDRAM — MAKE_BASE=TRUE

AMUX

4 OUT BBPMU_TO_PMU_AMUX1
4 OUT BBPMU_TO_PMU_AMUX2
4 OUT BBPMU_TO_PMU_AMUX3

BB CONTROL

20 17 3 IN AP_TO_BBPMU_RADIO_ON_L
17 3 IN PMU_TO_BBPMU_RESET_L
20 3 IN AP_TO_BB_RESET_L
17 7 OUT BB_TO_AP_RESET_DETECT_L
17 7 OUT BB_TO_STROBE_DRIVER_GSM_BURST_IND
7 IN AP_TO_BB_IPC_GPIO1
17 7 IN AP_TO_BB_TIME_MARK
17 7 IN AP_TO_BB_COREDUMP
3 IN LCM_TO_MANY_BSYNC
7 IN AP_TO_BB_MESA_ON

PCIE

17 6 IN 90_PCIE_AP_TO_BB_REFCLK_P
17 6 IN 90_PCIE_AP_TO_BB_REFCLK_N
6 IN 90_PCIE_AP_TO_BB_TXD_P
6 IN 90_PCIE_AP_TO_BB_TXD_N
6 OUT 90_PCIE_BB_TO_AP_RXD_P
6 90_PCIE_BB_TO_AP_RXD_N
7 3 IN PCIE_AP_TO_BB_RESET_L
7 IO PCIE_BB_BI_AP_CLKREQ_L
17 7 OUT BB_TO_PMU_PCIE_HOST_WAKE_L

AOP

7 IN UART_AOP_TO_BB_TXD
17 7 OUT UART_BB_TO_AOP_RXD

AUDIO

7 IN I2S_BB_TO_AP_BCLK
7 IN I2S_BB_TO_AP_LRCLK
7 IN I2S_AP_TO_BB_DOUT
7 OUT I2S_BB_TO_AP_DIN

WLAN

20 17 7 IN UART_BB_TO_WLAN_COEX
20 17 7 OUT UART_WLAN_TO_BB_COEX

NFC

20 IN NFC_SWP
20 17 IN NFC_SWP_MUX
20 17 OUT SE2_READY
20 17 IN AP_TO_ICEFALL_FW_DWLD_REQ
20 17 IN SE2_PWR_REQ
17 3 IN NFC_TO_BB_CLK_REQ
17 3 OUT BB_TO_NFC_CLK
20 OUT SE2_PRESENT
20 17 IN ICEFALL_LDO_ENABLE

DEBUG

20 6 IN SWD_AP_TO_MANY_SWCLK
20 6 IO SWD_AOP_BI_BB_SWDIO
20 17 3 IN PMU_TO_BB_USB_VBUS_DETECT
20 17 6 IO 90_USB_BB_DATA_P
20 17 6 IO 90_USB_BB_DATA_N

ANTENNA

15 IO 50_UAT_WLAN_2G_WEST_PLEXER
14 IO 50_UAT1_WEST
12 IO 50_UAT_LB_MLB_SOUTH
12 IO 50_UAT_MB_HB_SOUTH
14 IO 50_UUAT_LB_MLB_NORTH

TUNER

OUT BB_TO_UAT_SCLK — MAKE_BASE=TRUE BB_TO_UAT_SCLK 7 14
IO BB_TO_UAT_DATA — BB_TO_UAT_DATA 7 14 MAKE_BASE=TRUE
15 IO 50_UAT1_TUNER
7 OUT BUFFER_GPO1
7 OUT BUFFER_GPO2

DOCK

OUT BB_TO_LAT_ANT_SCLK — MAKE_BASE=TRUE BB_TO_LAT_ANT_SCLK 7 17
IO BB_TO_LAT_ANT_DATA — BB_TO_LAT_ANT_DATA 7 17 MAKE_BASE=TRUE

7 OUT BB_TO_LAT_GPO1
7 OUT BB_TO_LAT_GPO2
7 OUT BB_TO_LAT_GPO3

page1

DRAWING TITLE	SCH,MLB,D11
Apple Inc.	DRAWING NUMBER 051-00482 SIZE D
	REVISION 8.0.0
	BRANCH
	PAGE 1 OF 72
	SHEET 62 OF 81

NOTICE OF PROPRIETARY PROPERTY:
THE INFORMATION CONTAINED HEREIN IS THE PROPRIETARY PROPERTY OF APPLE INC.
THE POSESSOR AGREES TO THE FOLLOWING:
I TO MAINTAIN THIS DOCUMENT IN CONFIDENCE
II NOT TO REPRODUCE OR COPY IT
III NOT TO REVEAL OR PUBLISH IT IN WHOLE OR PART
IV ALL RIGHTS RESERVED

BOM OPTIONS:

LMBRF:

PART#	QTY	DESCRIPTION	REFERENCE DESIGNATOR(S)	CRITICAL	BOM OPTION
353S00723	1	MLB PAD	MLBPA_RF	CRITICAL	LMBRF
117S0002	1	MLB PAD LAT OUTPUT MATCH	R7105_RF	CRITICAL	LMBRF
152S2042	1	MLB PAD UAT OUTPUT MATCH	R7106_RF	CRITICAL	LMBRF
353S00627	1	MLB LNA	MLBLN_RF	CRITICAL	LMBRF
117S0002	1	MLB LNA OUTPUT MATCH	R6710_RF	CRITICAL	LMBRF
155S00139	1	PENTAPLEXER	PPLXR_RF	CRITICAL	LMBRF
118S0643	1	RES,MF,4.99K OHM,01005	R7506_RF	CRITICAL	LMBRF
155S00193	1	FLTR,DIPLEXER,LB-MB-HB,DPX,SHIELD,0805	UATDI_RF	CRITICAL	LMBRF
155S00158	1	FLTR,DIPLEXER,LB-MB/HB,MIRROR,0805	UPPDI_RF	CRITICAL	LMBRF
337S00284	1	IC,SECURE ELEMENT,BCM20211,WLBGA25	SE2_RF	CRITICAL	LMBRF
138S0739	1	CAP,1UF,0201	C7201_RF	CRITICAL	LMBRF
138S0739	1	CAP,1UF,0201	C7528_RF	CRITICAL	LMBRF
132S0316	1	CAP,0.1UF,01005	C7501_RF	CRITICAL	LMBRF
138S0739	1	CAP,1UF,0201	C7523_RF	CRITICAL	LMBRF
138S0739	1	CAP,1UF,0201	C7524_RF	CRITICAL	LMBRF
138S00032	1	CAP,2.2UF,0201	C7529_RF	CRITICAL	LMBRF
138S00032	1	CAP,2.2UF,0201	C7530_RF	CRITICAL	LMBRF
131S0217	1	CAP,100PF,01005	C7531_RF	CRITICAL	LMBRF
118S0627	1	RES,10KOHM,01005	R7512_RF	CRITICAL	LMBRF
353S00026	1	LDO,BGA,2X2	SE2LDO_RF	CRITICAL	LMBRF
131S0630	1	CAP,CER,NPO/COG,27PF,2%,16V,01005	C6345_RF	CRITICAL	LMBRF
131S0341	1	CAP,CER,COG,3.0PF,+/-0.05,25V,0201,HI-Q	C6348_RF	CRITICAL	LMBRF
152S2006	1	IND,FILM,6.2NH,3%,400MA,UH-Q,0201	L6322_RF	CRITICAL	LMBRF
131S0630	1	CAP,CER,NPO/COG,27PF,2%,16V,01005	C6315_RF	CRITICAL	LMBRF
152S2006	1	IND,FILM,6.2NH,3%,400MA,UH-Q,0201	L6305_RF	CRITICAL	LMBRF
131S0341	1	CAP,CER,COG,3.0PF,+/-0.05PF,25V,0201,HI-Q	C6306_RF	CRITICAL	LMBRF
131S0630	1	CAP,CER,NPO/COG,27PF,2%,16V,01005	C6106_RF	CRITICAL	LMBRF
152S2051	1	IND,1.3NH,1.1A,0201	R6404_RF	CRITICAL	LMBRF
152S2000	1	IND,2.0NH,600MA,0201	R7104_RF	CRITICAL	LMBRF
131S00001	1	CAP,CER,0.1PF,25V,0201	C7119_RF	CRITICAL	LMBRF
118S0724	1	RES,MF,0OHM,1/20W,0201	R6703_RF	CRITICAL	LMBRF
118S0724	1	RES,MF,0OHM,1/20W,0201	R6708_RF	CRITICAL	LMBRF
131S0363	1	CAP,CER,C0G,HQ,0.6PF,+/-0.05PF,25V,0201	C7123_RF	CRITICAL	LMBRF
152S2002	1	IND,2.7NH,+/-0.1NH,600MA,0201,UH-Q	R6605_RF	CRITICAL	LMBRF
131S0337	1	CAP,1.5PF,+/-0.05PF,25V,0201,HQ	C6610_RF	CRITICAL	LMBRF
118S0724	1	RES,MF,0OHM,1/20W,0201	R6606_RF	CRITICAL	LMBRF
131S0275	1	CAP,CER,C0G,0.3PF,+/-0.1PF,25V,0201,HQ	C6416_RF	CRITICAL	LMBRF
118S0608	1	RES,MF,1K OHM,1%,1/32W,01005	R5911_RF	CRITICAL	LMBRF
152S1356	1	IND,10NH,3%,250MA,HI-Q,0201	C6613_RF	CRITICAL	LMBRF

NOLMBRF:

PART#	QTY	DESCRIPTION	REFERENCE DESIGNATOR(S)	CRITICAL	BOM OPTION
131S0444	1	DCS/PCS RX FILTER MATCH	R6301_RF	CRITICAL	NOLMBRF
152S2020	1	DCS/PCS RX FILTER MATCH	L6320_RF	CRITICAL	NOLMBRF
155S00149	1	DCS/PCS RX FILTER	GSMRX_RF	CRITICAL	NOLMBRF
152S2005	1	DCS/PCS RX MATCH (DCS)	L6318_RF	CRITICAL	NOLMBRF
131S0319	1	DCS/PCS RX MATCH (DCS)	C6332_RF	CRITICAL	NOLMBRF
131S0630	1	DCS/PCS RX MATCH (DCS)	C6340_RF	CRITICAL	NOLMBRF
152S2005	1	DCS/PCS RX MATCH (DCS)	L6319_RF	CRITICAL	NOLMBRF
131S0385	1	DCS/PCS RX MATCH (DCS)	C6333_RF	CRITICAL	NOLMBRF
131S0630	1	DCS/PCS RX MATCH (DCS)	C6341_RF	CRITICAL	NOLMBRF
155S00163	1	QUADPLEXER	PPLXR_RF	CRITICAL	NOLMBRF
155S00199	1	FLTR,DPX,PASS THRU,LB-MB-HB,SHLD,0805	UATDI_RF	CRITICAL	NOLMBRF
155S00234	1	FLTR,DPX,PASS THRU,LB-MB-HB,UNSHLD,0805	UPPDI_RF	CRITICAL	NOLMBRF
118S0724	1	RES,MF,0OHM,1/20W,0201	R6404_RF	CRITICAL	NOLMBRF
152S2044	1	IND,2.2NH,+/-0.1NH,600MA,0201	R7104_RF	CRITICAL	NOLMBRF
152S00157	1	1.2NH,+/-0.05NH,1.1A,UH-Q,0201	R6703_RF	CRITICAL	NOLMBRF
131S0549	1	18PF,0201,25V	R6708_RF	CRITICAL	NOLMBRF
131S0445	1	CAP,CER,12PF,5%,25V,0201,HI-Q	R6606_RF	CRITICAL	NOLMBRF

D10 SPECIFIC:

PART#	QTY	DESCRIPTION	REFERENCE DESIGNATOR(S)	CRITICAL	BOM OPTION
131S0278	1	CAP,CER,COG,1PF,+/-0.1PF,25V,0201,HI-Q	C7120_RF	CRITICAL	D10

D11 SPECIFIC:

PART#	QTY	DESCRIPTION	REFERENCE DESIGNATOR(S)	CRITICAL	BOM OPTION
131S0425	1	CAP,CER,COG,0.5PF,+/-0.05PF,25V,0201,HI-Q	C7120_RF	CRITICAL	D11

PMU: CONTROL AND CLOCKS

HW_REV_ID	R5505	R5501	REVISION
0.10V	887K	51.1K	DEV1
0.20V	422K	51.1K	DEV2
0.30V	255K	51.1K	DEV 2.1
0.40V	180K	51.1K	DEV 3
0.50V	124K	51.1K	T181
0.60V	102K	51.1K	PP/P1
0.70V	82.5K	51.1K	DEV4
0.80V	63.4K	51.1K	P2
0.90V	51.1K	51.1K	DEV5
1.00V	51.1K	63.4K	EVT
1.10V	51.1K	82.5K	EVT DOE
1.20V	50.0K	100K	EVT ALT/CARBON
1.30V	39.0K	100K	DEV6
1.40V	14.7K	51.1K	CARRIER
1.50V	40.2K	200K	DVT
1.60V	6.34K	51.1K	PVT

RESET AND CONTROL: PMU

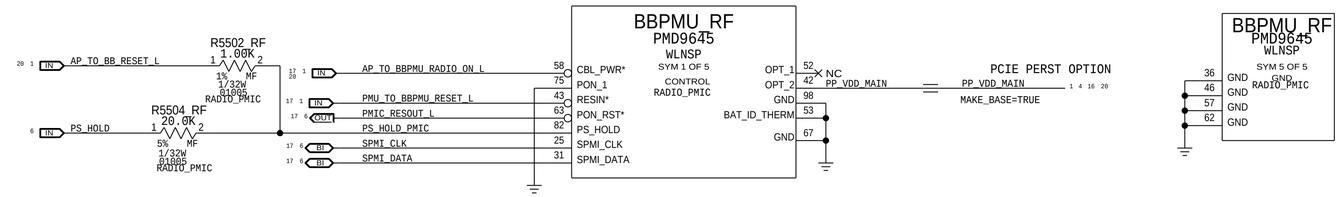

MPPS AND GPIOS: PMU

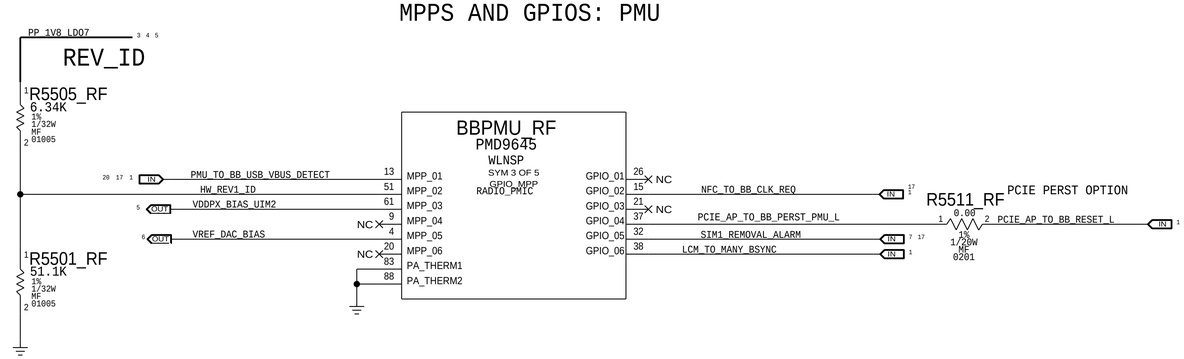

XTAL AND CLOCK: PMU

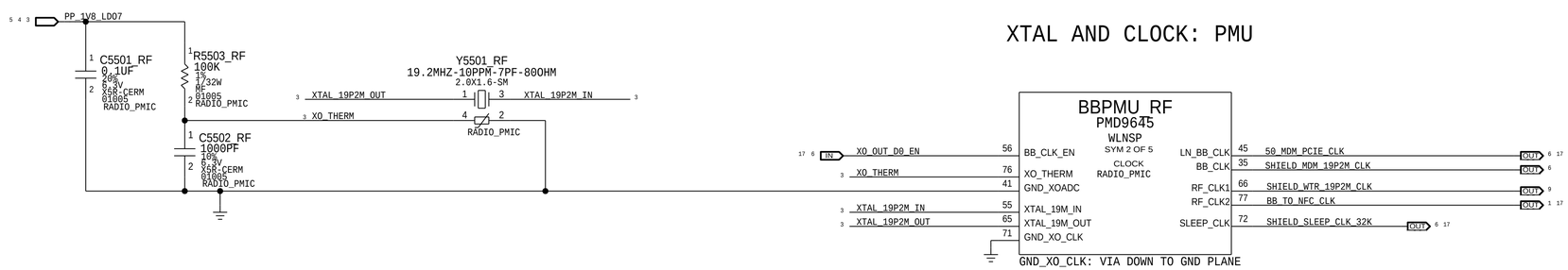

CONFIDENTIAL AND PROPRIETARY APPLE SYSTEM DESIGN. FOR REFERENCE PURPOSE ONLY - NOT A CHANGE REQUEST

SYNC_DATE=04/17/2015

PAGE TITLE
PAGE_TITLE=PMU: CONTROL AND CLOCKS

Apple Inc.

DRAWING NUMBER 051-00482 SIZE D

REVISION 8.0.0

BRANCH

PAGE 55 OF 72

SHEET 64 OF 81

NOTICE OF PROPRIETARY PROPERTY:
THE INFORMATION CONTAINED HEREIN IS THE PROPRIETARY PROPERTY OF APPLE INC.
THE POSESSOR AGREES TO THE FOLLOWING:
I TO MAINTAIN THIS DOCUMENT IN CONFIDENCE
II NOT TO REPRODUCE OR COPY IT
III NOT TO REVEAL OR PUBLISH IT IN WHOLE OR PART
IV ALL RIGHTS RESERVED

PMU: SWITCHERS AND LDOS

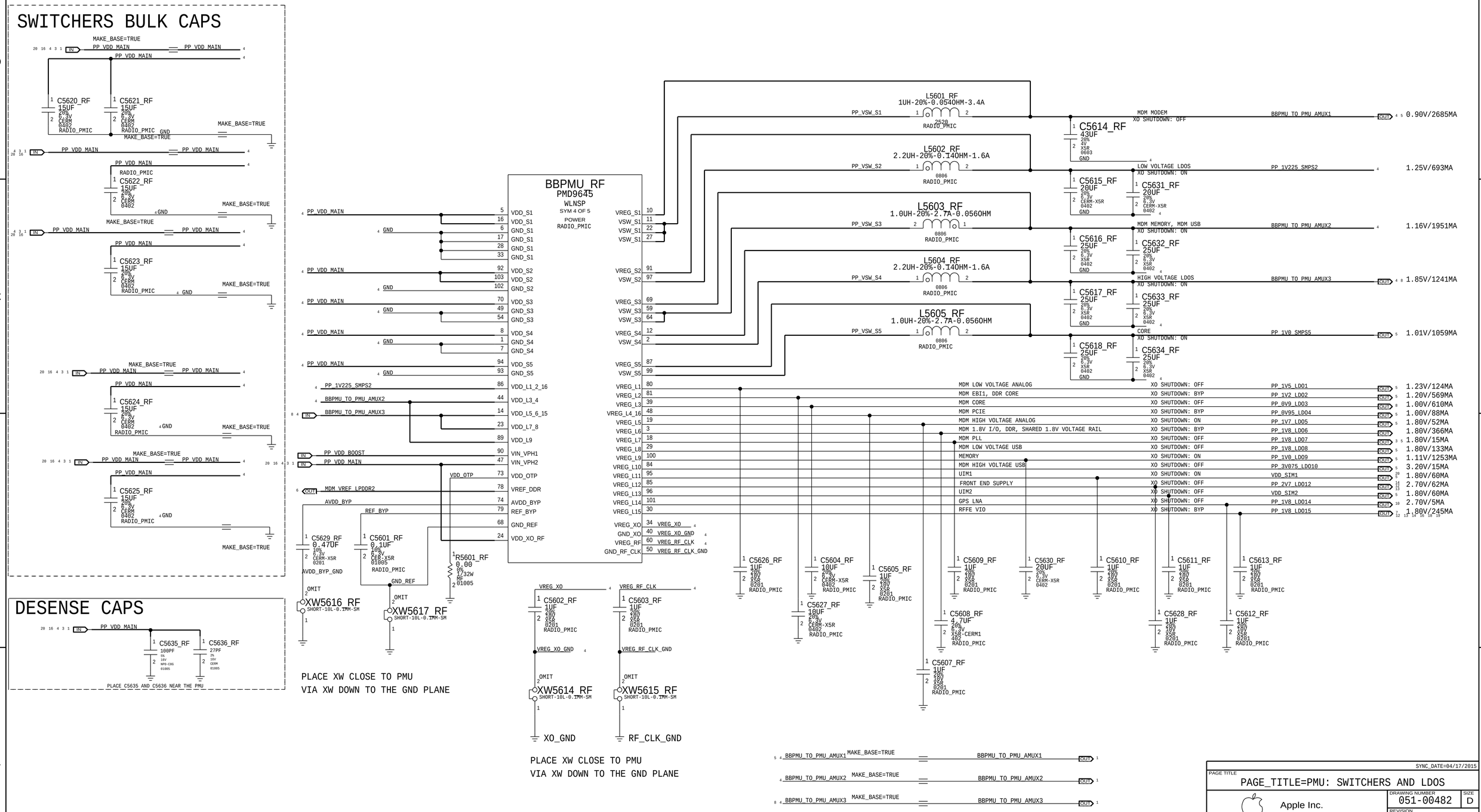

CONFIDENTIAL AND PROPRIETARY APPLE SYSTEM DESIGN. FOR REFERENCE PURPOSE ONLY - NOT A CHANGE REQUEST

SYNC_DATE=04/17/2015

PAGE TITLE: PAGE_TITLE=PMU: SWITCHERS AND LDOS

Apple Inc.

DRAWING NUMBER: 051-00482 | SIZE: D

REVISION: 8.0.0

BRANCH

PAGE: 56 OF 72

SHEET: 65 OF 81

NOTICE OF PROPRIETARY PROPERTY:
THE INFORMATION CONTAINED HEREIN IS THE PROPRIETARY PROPERTY OF APPLE INC.
THE POSESSOR AGREES TO THE FOLLOWING:
I TO MAINTAIN THIS DOCUMENT IN CONFIDENCE
II NOT TO REPRODUCE OR COPY IT
III NOT TO REVEAL OR PUBLISH IT IN WHOLE OR PART
IV ALL RIGHTS RESERVED

BASEBAND: POWER

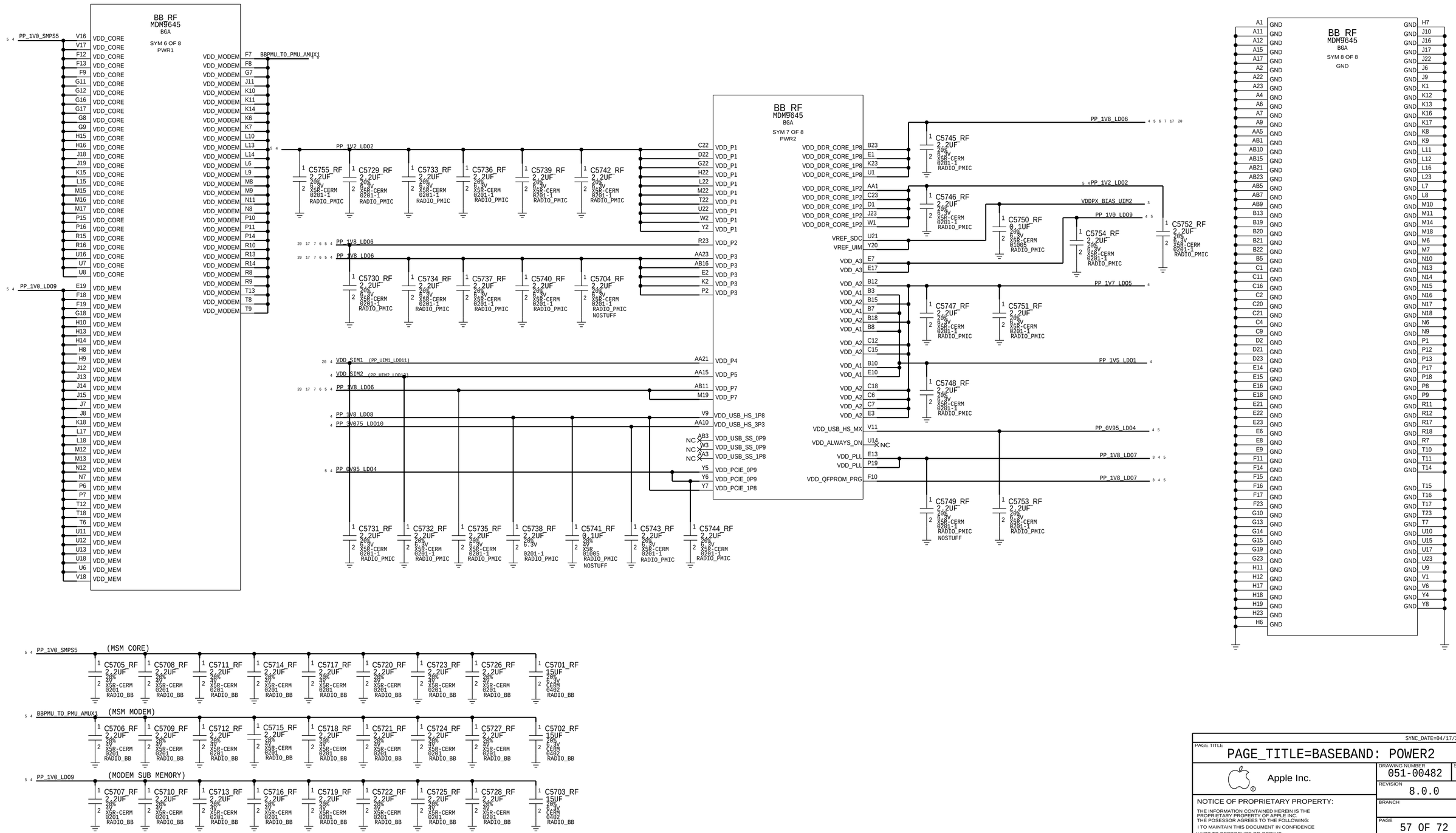

CONFIDENTIAL AND PROPRIETARY APPLE SYSTEM DESIGN. FOR REFERENCE PURPOSE ONLY - NOT A CHANGE REQUEST

SYNC_DATE=04/17/2015

PAGE TITLE: PAGE_TITLE=BASEBAND: POWER2

Apple Inc.

DRAWING NUMBER: 051-00482 SIZE: D

REVISION: 8.0.0

BRANCH

PAGE: 57 OF 72

SHEET: 66 OF 81

NOTICE OF PROPRIETARY PROPERTY:
THE INFORMATION CONTAINED HEREIN IS THE PROPRIETARY PROPERTY OF APPLE INC.
THE POSESSOR AGREES TO THE FOLLOWING:
I TO MAINTAIN THIS DOCUMENT IN CONFIDENCE
II NOT TO REPRODUCE OR COPY IT
III NOT TO REVEAL OR PUBLISH IT IN WHOLE OR PART
IV ALL RIGHTS RESERVED

BASEBAND: CONTROL AND INTERFACES

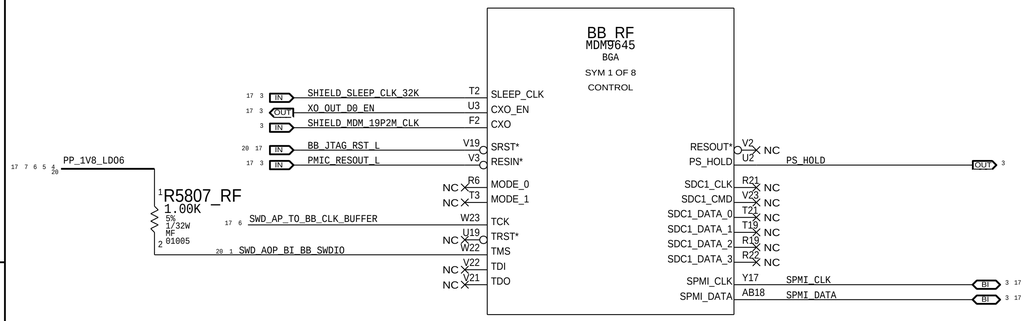

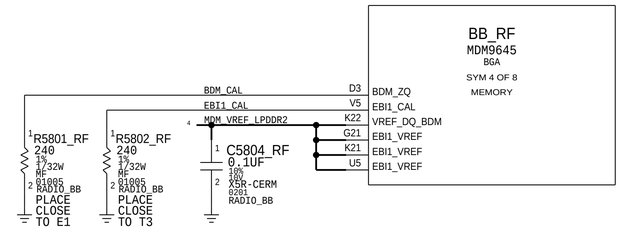

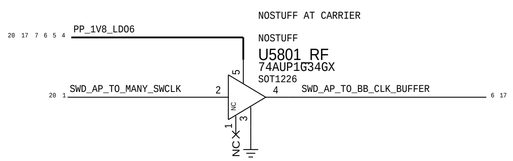

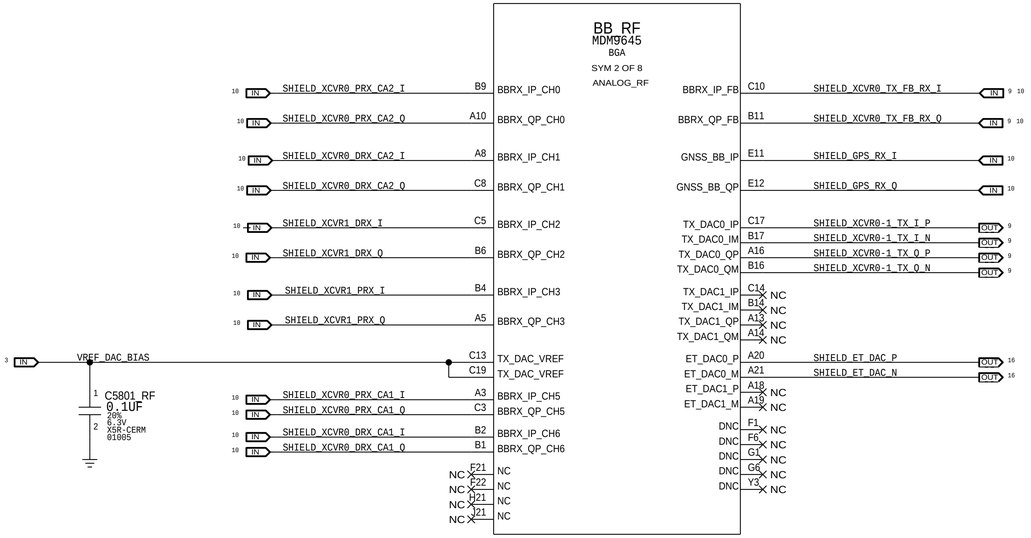

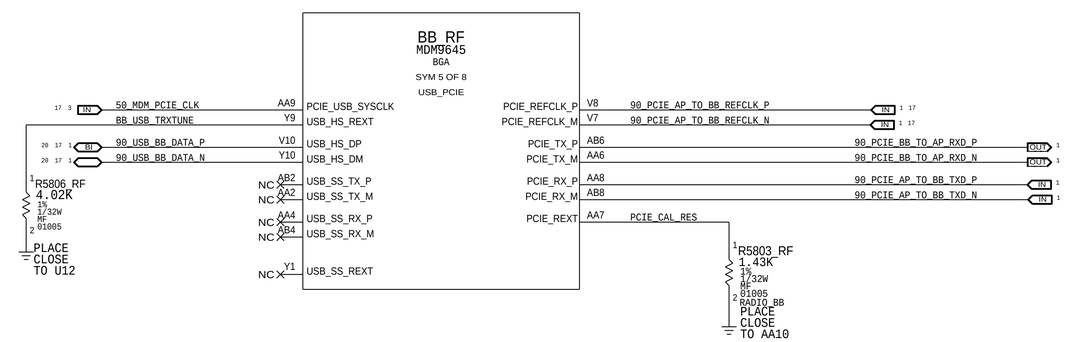

CONFIDENTIAL AND PROPRIETARY APPLE SYSTEM DESIGN. FOR REFERENCE PURPOSE ONLY - NOT A CHANGE REQUEST

SYNC_DATE=04/17/2015

PAGE TITLE
PAGE_TITLE=BASEBAND: CONTROL

Apple Inc.

DRAWING NUMBER 051-00482 SIZE D

REVISION 8.0.0

BRANCH

PAGE 58 OF 72

SHEET 67 OF 81

NOTICE OF PROPRIETARY PROPERTY:
THE INFORMATION CONTAINED HEREIN IS THE PROPRIETARY PROPERTY OF APPLE INC.
THE POSESSOR AGREES TO THE FOLLOWING:
I TO MAINTAIN THIS DOCUMENT IN CONFIDENCE
II NOT TO REPRODUCE OR COPY IT
III NOT TO REVEAL OR PUBLISH IT IN WHOLE OR PART
IV ALL RIGHTS RESERVED

BASEBAND: GPIOS

SKU	R5911_RF	R5912_RF
ROW	NOSTUFF	NOSTUFF
JP	1.0 KOHM	NOSTUFF

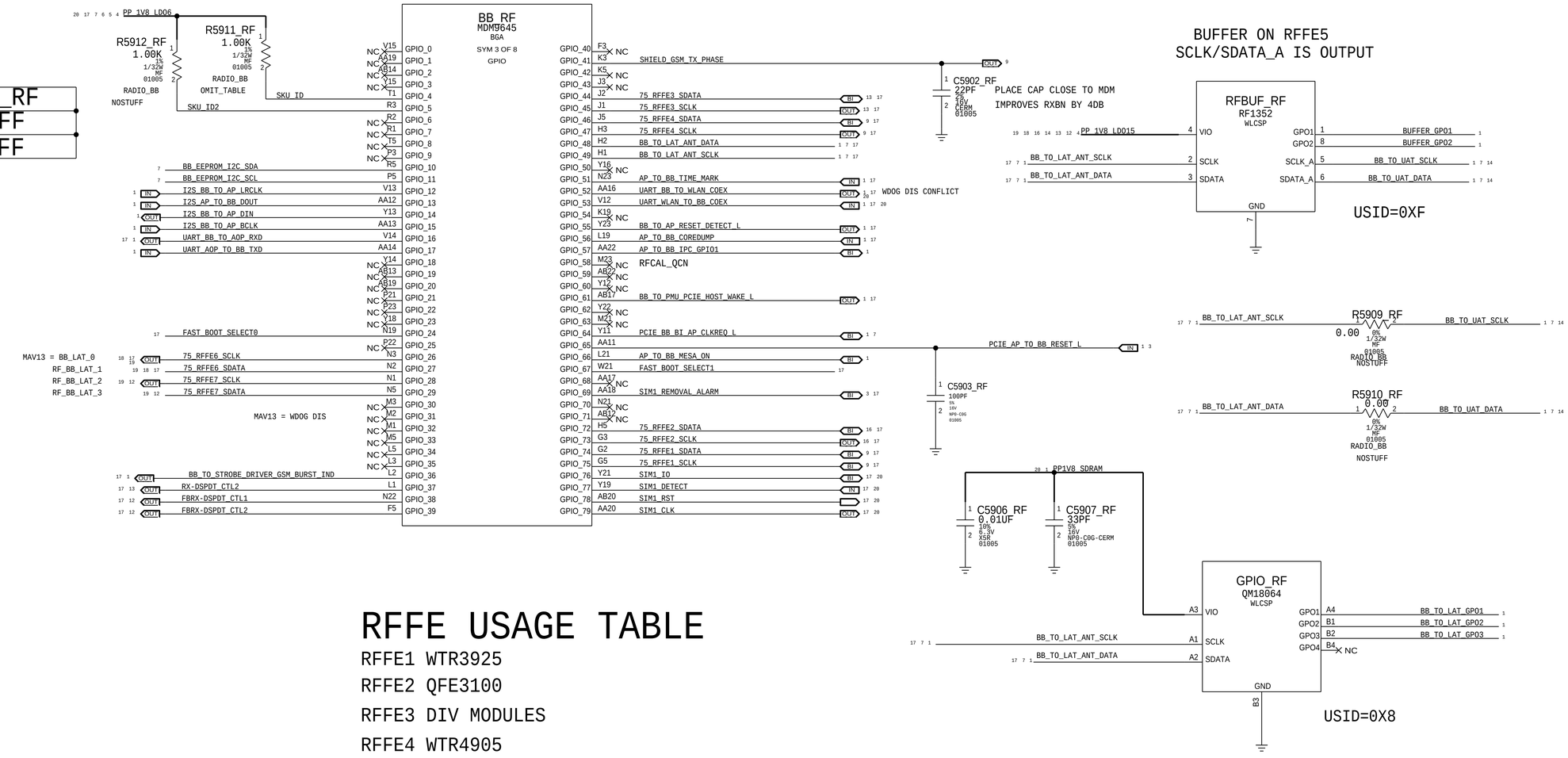

RFFE USAGE TABLE

RFFE1 WTR3925
RFFE2 QFE3100
RFFE3 DIV MODULES
RFFE4 WTR4905
RFFE5 TUNERS + ELNAS
RFFE6 2G PA,MLB PA,MB/HB TDD PA,MB/HB FDD PA
RFFE7 LB PA, COUPLERS

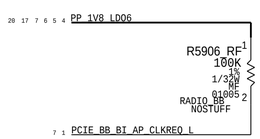

PCIE PULL-UPS TO BB RAIL

BB EEPROM

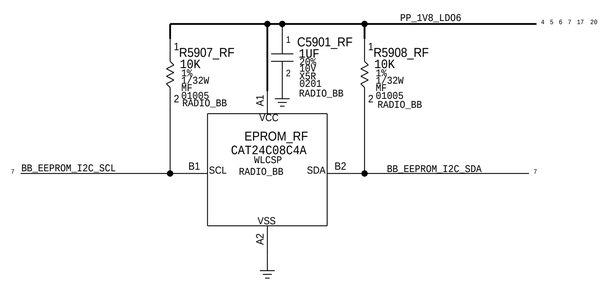

CONFIDENTIAL AND PROPRIETARY APPLE SYSTEM DESIGN. FOR REFERENCE PURPOSE ONLY - NOT A CHANGE REQUEST

SYNC_DATE=04/17/2015

PAGE TITLE: BASEBAND GPIOS

Apple Inc.

DRAWING NUMBER: 051-00482 SIZE: D

REVISION: 8.0.0

BRANCH:

PAGE: 59 OF 72

SHEET: 68 OF 81

NOTICE OF PROPRIETARY PROPERTY:
THE INFORMATION CONTAINED HEREIN IS THE PROPRIETARY PROPERTY OF APPLE INC.
THE POSESSOR AGREES TO THE FOLLOWING:
I TO MAINTAIN THIS DOCUMENT IN CONFIDENCE
II NOT TO REPRODUCE OR COPY IT
III NOT TO REVEAL OR PUBLISH IT IN WHOLE OR PART
IV ALL RIGHTS RESERVED

TRANSCEIVER: POWER

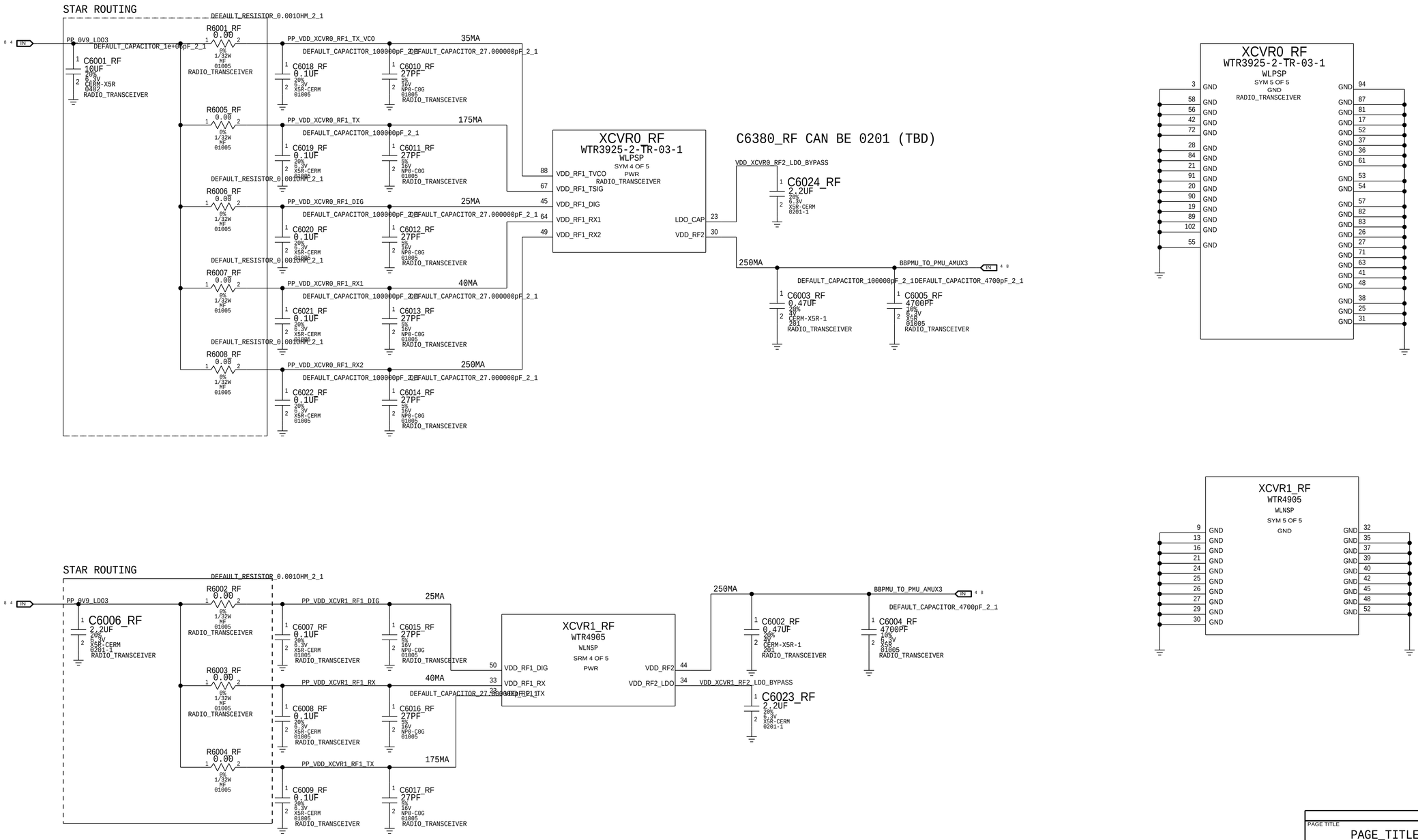

CONFIDENTIAL AND PROPRIETARY APPLE SYSTEM DESIGN. FOR REFERENCE PURPOSE ONLY - NOT A CHANGE REQUEST

SYNC_DATE=04/17/2015

PAGE TITLE: PAGE_TITLE=TRANSCEIVER0/1: POWER

Apple Inc.

DRAWING NUMBER: 051-00482 | SIZE: D

REVISION: 8.0.0

BRANCH:

PAGE: 60 OF 72

SHEET: 69 OF 81

NOTICE OF PROPRIETARY PROPERTY:
THE INFORMATION CONTAINED HEREIN IS THE PROPRIETARY PROPERTY OF APPLE INC.
THE POSESSOR AGREES TO THE FOLLOWING:
I TO MAINTAIN THIS DOCUMENT IN CONFIDENCE
II NOT TO REPRODUCE OR COPY IT
III NOT TO REVEAL OR PUBLISH IT IN WHOLE OR PART
IV ALL RIGHTS RESERVED

TRANSCEIVER: TX PORTS

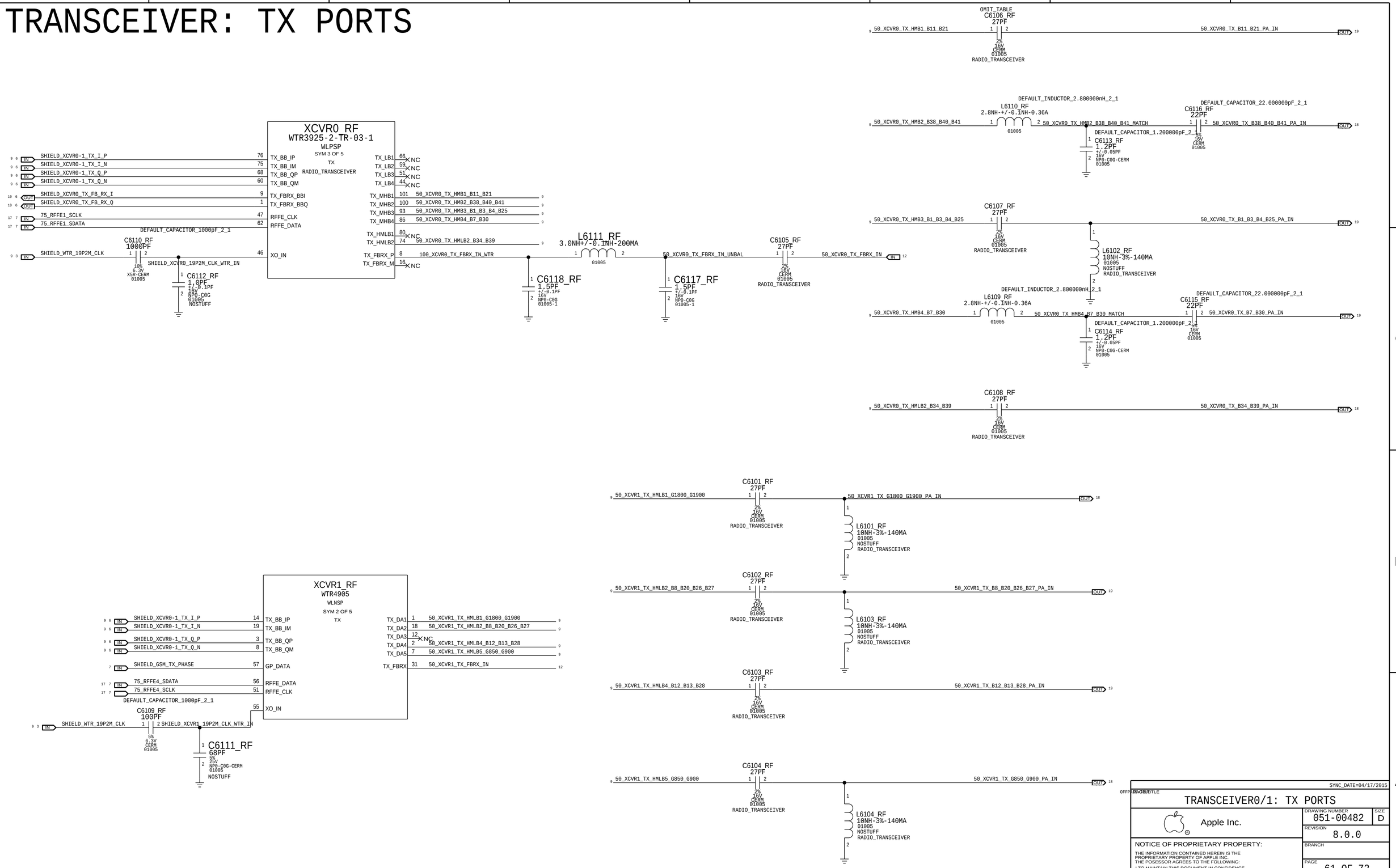

SYNC_DATE=04/17/2015	
TITLE	TRANSCEIVER0/1: TX PORTS
Apple Inc.	DRAWING NUMBER 051-00482 SIZE D
	REVISION 8.0.0
	BRANCH
	PAGE 61 OF 72
	SHEET 70 OF 81

NOTICE OF PROPRIETARY PROPERTY:
THE INFORMATION CONTAINED HEREIN IS THE PROPRIETARY PROPERTY OF APPLE INC. THE POSESSOR AGREES TO THE FOLLOWING:
I TO MAINTAIN THIS DOCUMENT IN CONFIDENCE
II NOT TO REPRODUCE OR COPY IT
III NOT TO REVEAL OR PUBLISH IT IN WHOLE OR PART
IV ALL RIGHTS RESERVED

CONFIDENTIAL AND PROPRIETARY APPLE SYSTEM DESIGN. FOR REFERENCE PURPOSE ONLY - NOT A CHANGE REQUEST

TRANSCEIVER: PRX, DRX, & GPS PORTS

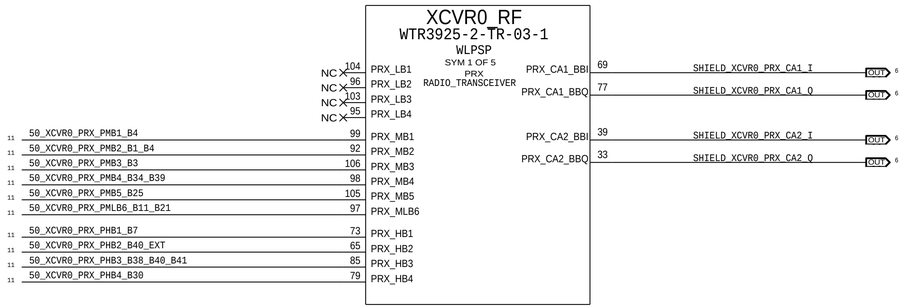

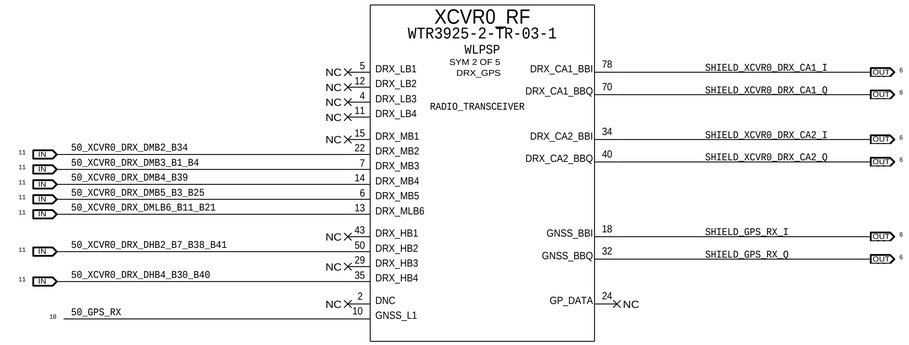

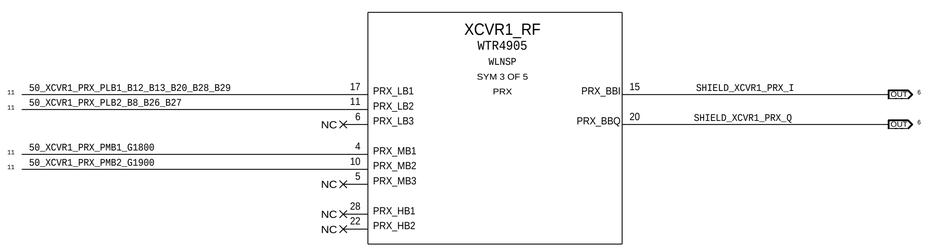

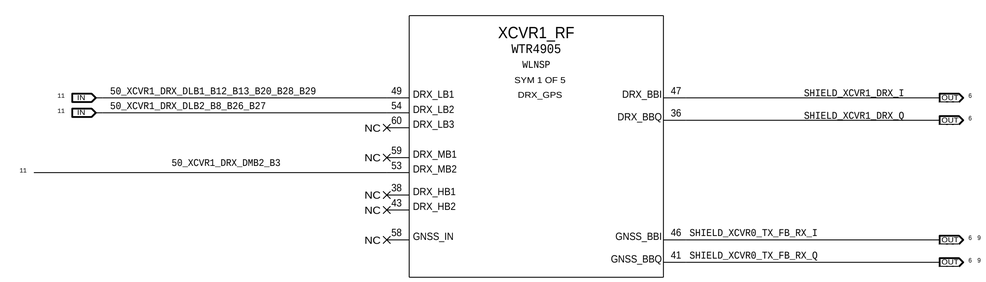

GPS FILTER

PLACE NEAR U_WTR

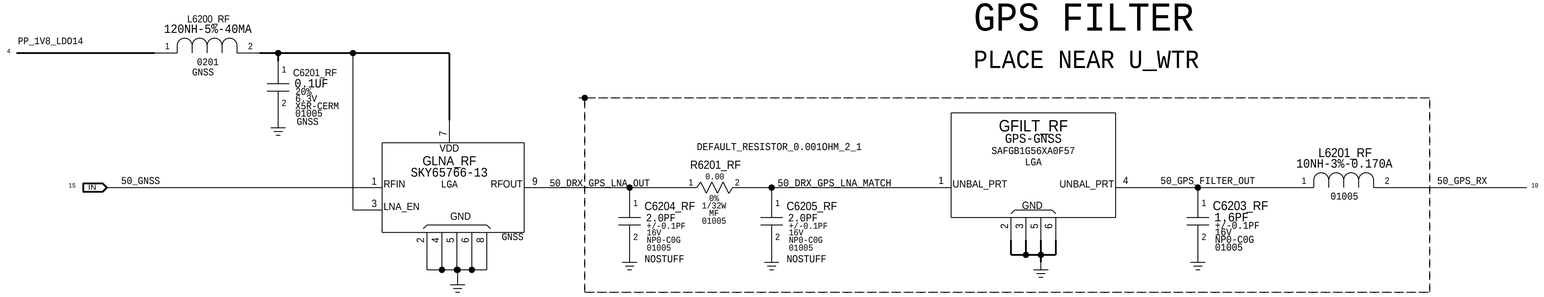

CONFIDENTIAL AND PROPRIETARY APPLE SYSTEM DESIGN. FOR REFERENCE PURPOSE ONLY - NOT A CHANGE REQUEST

SYNC_DATE=04/17/2015

PAGE TITLE
PAGE_TITLE=TRANSCEIVER0/1: PRX PORTS

Apple Inc.

DRAWING NUMBER 051-00482
SIZE D
REVISION 8.0.0
BRANCH
PAGE 62 OF 72
SHEET 71 OF 81

NOTICE OF PROPRIETARY PROPERTY:
THE INFORMATION CONTAINED HEREIN IS THE PROPRIETARY PROPERTY OF APPLE INC.
THE POSESSOR AGREES TO THE FOLLOWING:
I TO MAINTAIN THIS DOCUMENT IN CONFIDENCE
II NOT TO REPRODUCE OR COPY IT
III NOT TO REVEAL OR PUBLISH IT IN WHOLE OR PART
IV ALL RIGHTS RESERVED

PRIMARY & DIVERSITY RECEIVE MATCHING

DC BLOCKING CAP VALUES CANNOT BE MORE THAN 33PF

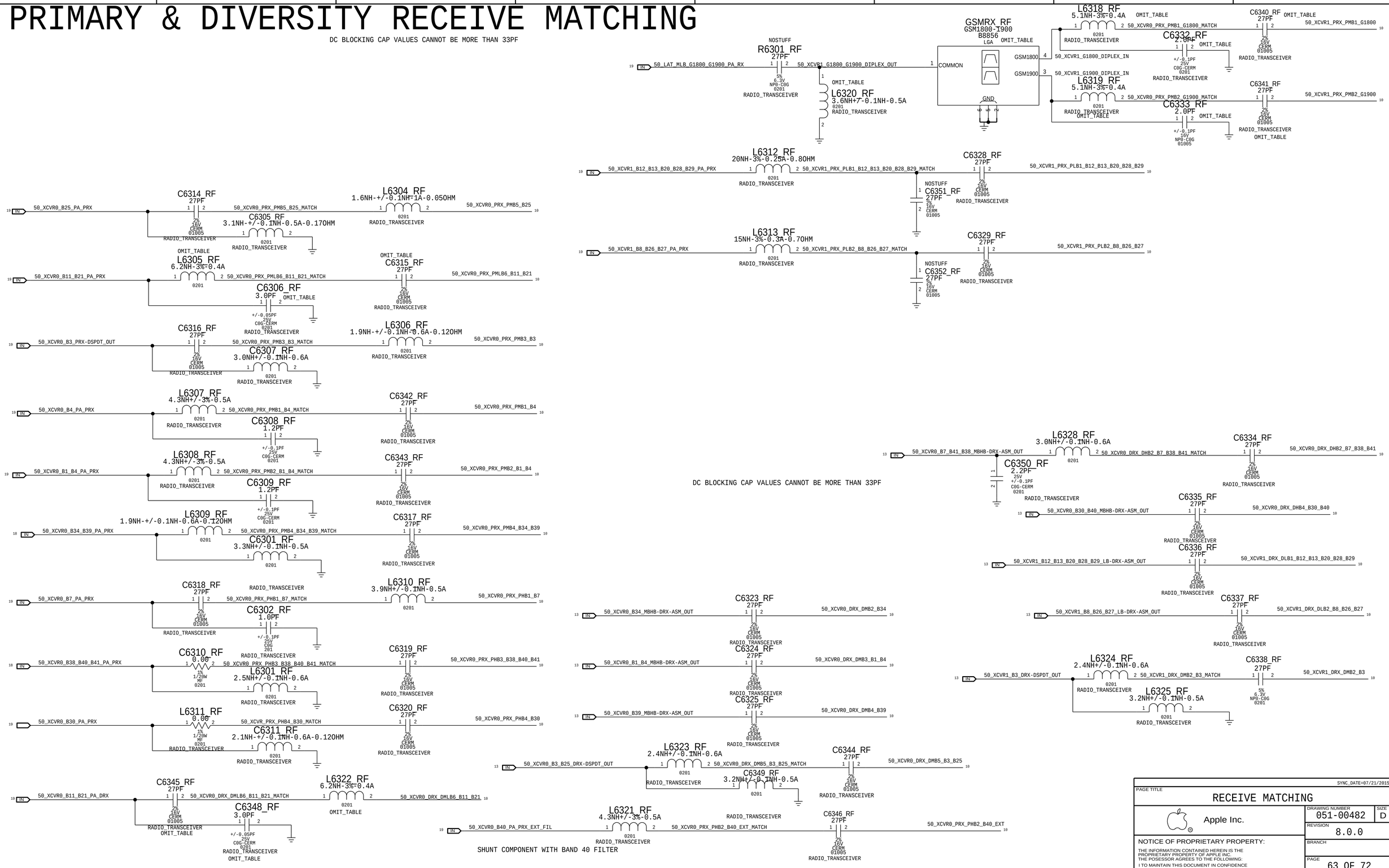

DC BLOCKING CAP VALUES CANNOT BE MORE THAN 33PF

PAGE TITLE	RECEIVE MATCHING
Apple Inc.	DRAWING NUMBER 051-00482 SIZE D
	REVISION 8.0.0
	BRANCH
	PAGE 63 OF 72
	SHEET 72 OF 81

SYNC_DATE=07/21/2015

NOTICE OF PROPRIETARY PROPERTY:
THE INFORMATION CONTAINED HEREIN IS THE PROPRIETARY PROPERTY OF APPLE INC.
THE POSESSOR AGREES TO THE FOLLOWING:
I TO MAINTAIN THIS DOCUMENT IN CONFIDENCE
II NOT TO REPRODUCE OR COPY IT
III NOT TO REVEAL OR PUBLISH IT IN WHOLE OR PART
IV ALL RIGHTS RESERVED

CONFIDENTIAL AND PROPRIETARY APPLE SYSTEM DESIGN. FOR REFERENCE PURPOSE ONLY - NOT A CHANGE REQUEST

LOWER ANTENNA AND COUPLER

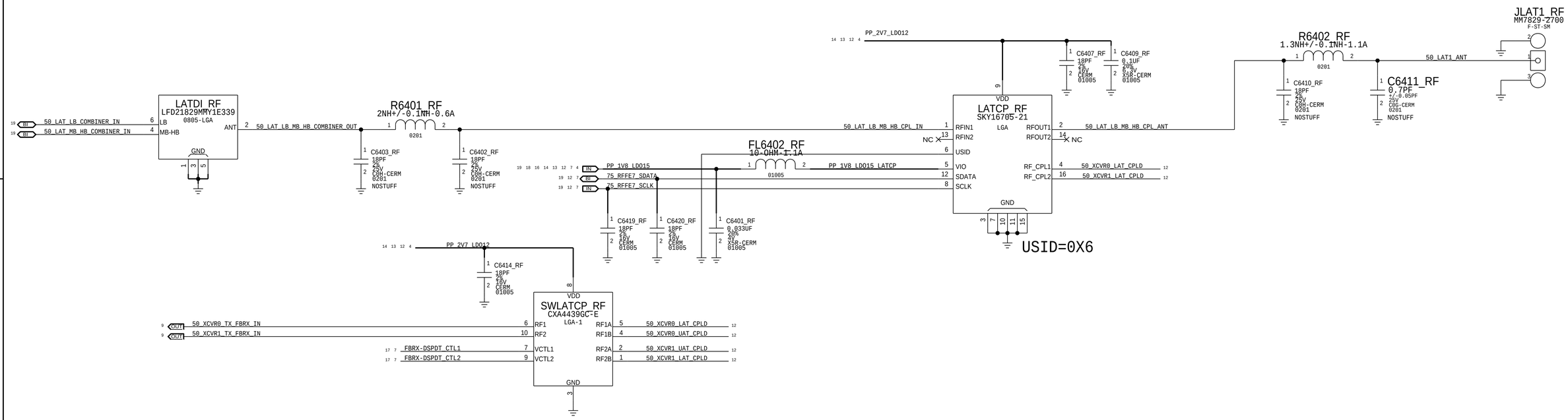

UPPER ANTENNA COUPLER

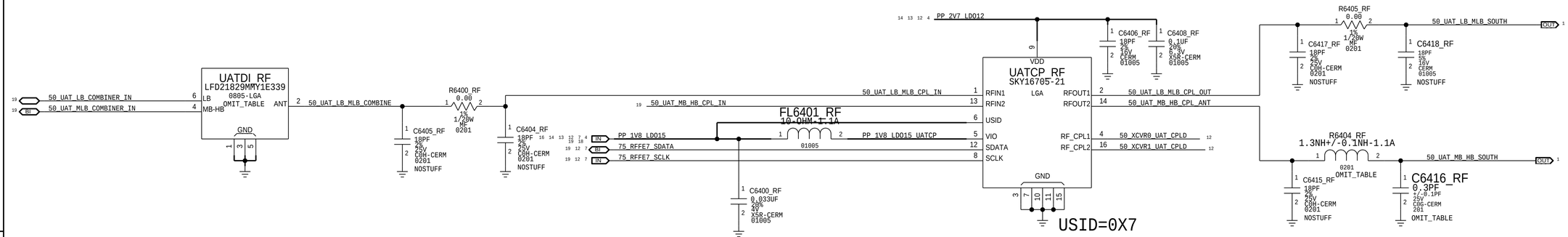

SYNC_DATE=04/17/2015

PAGE TITLE
PAGE_TITLE=LOWER ANTENNA & COUPLERS

Apple Inc.

DRAWING NUMBER 051-00482 SIZE D

REVISION 8.0.0

BRANCH

PAGE 64 OF 72

SHEET 73 OF 81

NOTICE OF PROPRIETARY PROPERTY:
THE INFORMATION CONTAINED HEREIN IS THE PROPRIETARY PROPERTY OF APPLE INC.
THE POSESSOR AGREES TO THE FOLLOWING:
I TO MAINTAIN THIS DOCUMENT IN CONFIDENCE
II NOT TO REPRODUCE OR COPY IT
III NOT TO REVEAL OR PUBLISH IT IN WHOLE OR PART
IV ALL RIGHTS RESERVED

DIVERSITY RECEIVE

LB DRX ASM

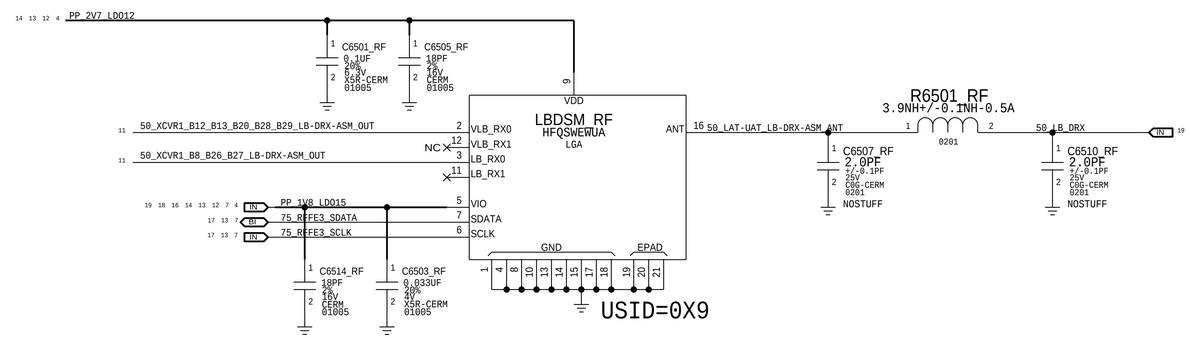

MB HB DRX ASM

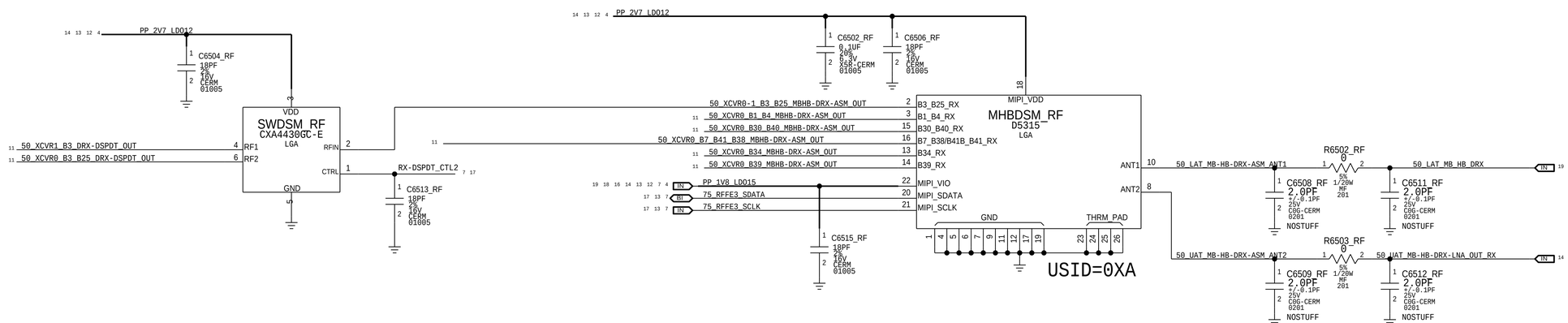

SYNC_DATE=04/17/2015

PAGE TITLE
PAGE_TITLE=DIVERSITY RECEIVE ASM'S

Apple Inc.

DRAWING NUMBER 051-00482 | SIZE D

REVISION 8.0.0

BRANCH

PAGE 65 OF 72

SHEET 74 OF 81

NOTICE OF PROPRIETARY PROPERTY:

THE INFORMATION CONTAINED HEREIN IS THE PROPRIETARY PROPERTY OF APPLE INC.
THE POSESSOR AGREES TO THE FOLLOWING:
I TO MAINTAIN THIS DOCUMENT IN CONFIDENCE
II NOT TO REPRODUCE OR COPY IT
III NOT TO REVEAL OR PUBLISH IT IN WHOLE OR PART
IV ALL RIGHTS RESERVED

DIVERSITY RECEIVE LNAS

LB DRX LNA

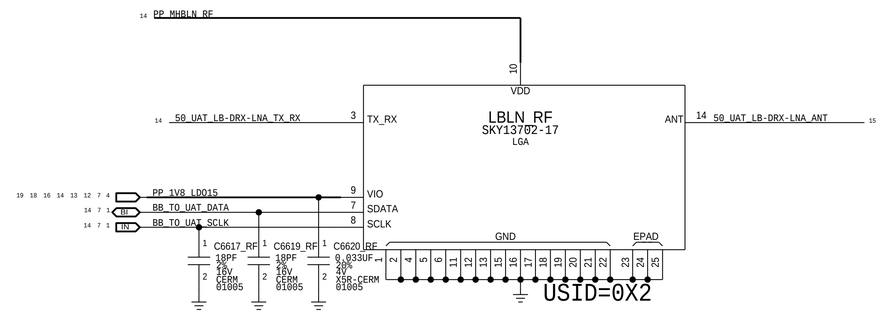

MB/HB DRX LNA

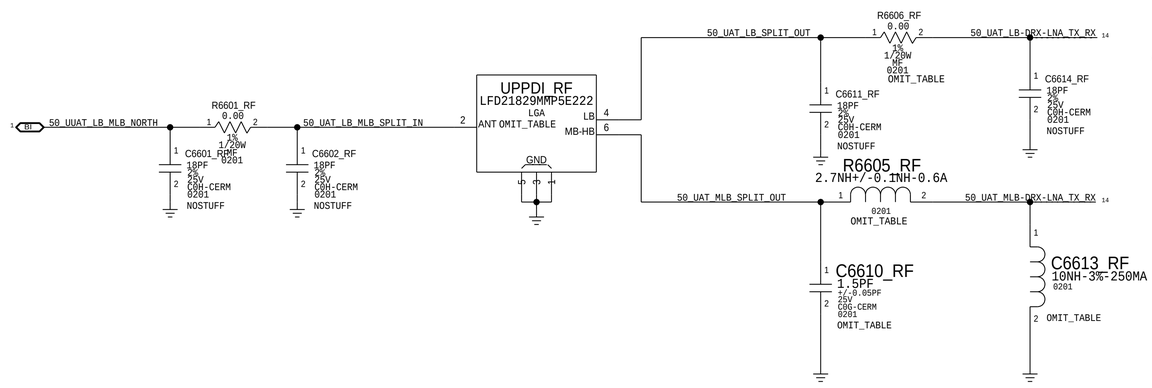

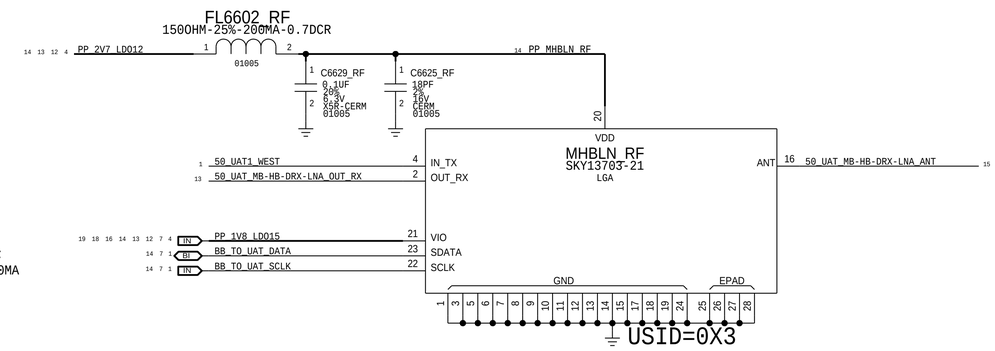

MLB DRX LNA

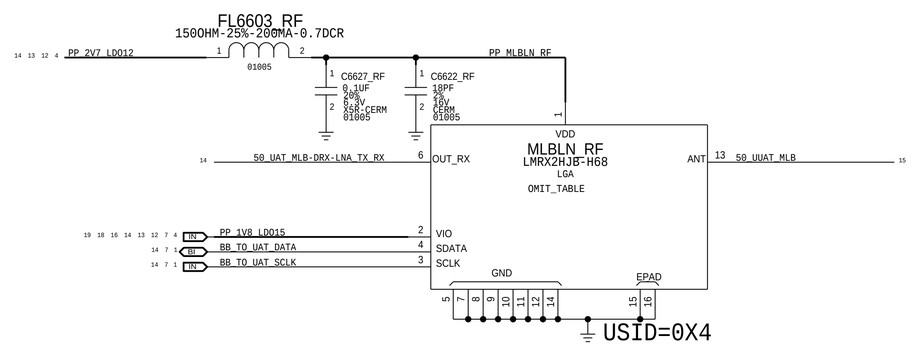

SYNC_DATE=04/17/2015

PAGE TITLE
DIVERSITY RECEIVE LNA'S

Apple Inc.

DRAWING NUMBER 051-00482 SIZE D

REVISION 8.0.0

BRANCH

PAGE 66 OF 72

SHEET 75 OF 81

NOTICE OF PROPRIETARY PROPERTY:

THE INFORMATION CONTAINED HEREIN IS THE PROPRIETARY PROPERTY OF APPLE INC.
THE POSESSOR AGREES TO THE FOLLOWING:
I TO MAINTAIN THIS DOCUMENT IN CONFIDENCE
II NOT TO REPRODUCE OR COPY IT
III NOT TO REVEAL OR PUBLISH IT IN WHOLE OR PART
IV ALL RIGHTS RESERVED

CDS_LIB=apple

UPPER ANTENNA FEEDS

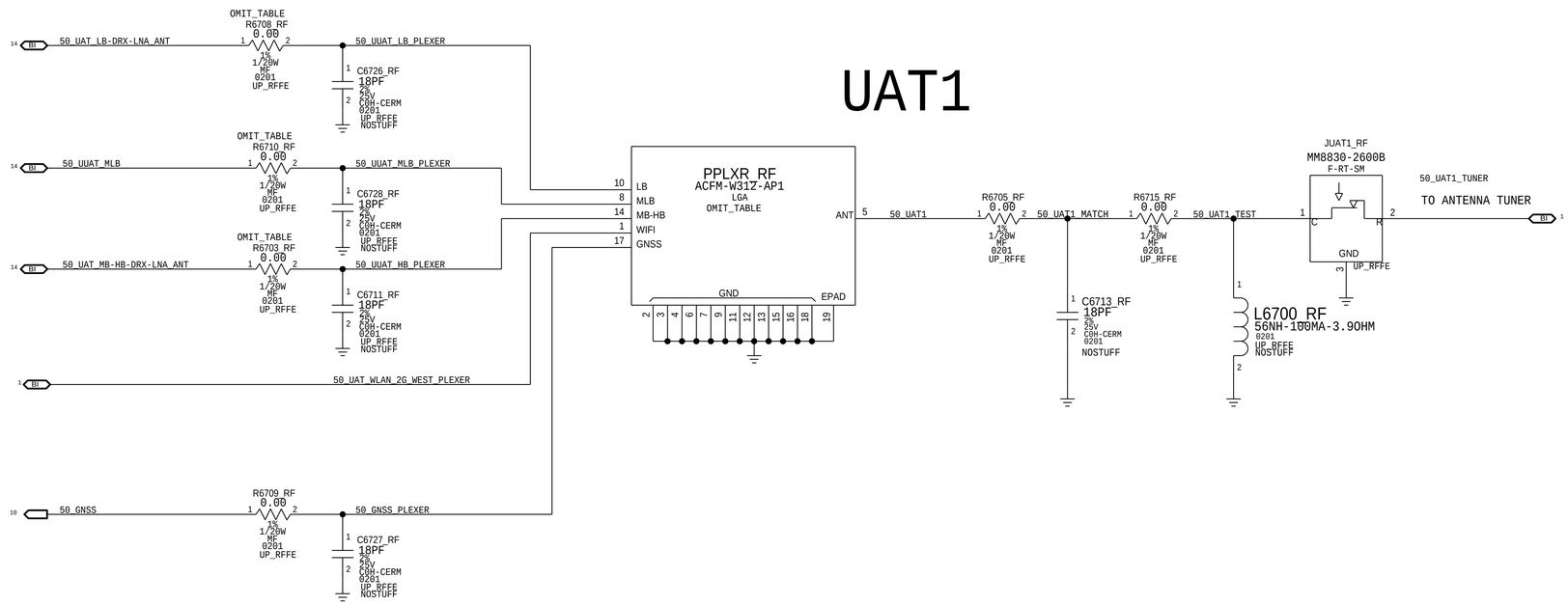

SYNC_DATE=04/17/2015

PAGE TITLE
PAGE_TITLE=UPPER ANTENNA FEEDS

Apple Inc.

DRAWING NUMBER 051-00482 SIZE D

REVISION 8.0.0

BRANCH

PAGE 67 OF 72

SHEET 76 OF 81

NOTICE OF PROPRIETARY PROPERTY:
THE INFORMATION CONTAINED HEREIN IS THE PROPRIETARY PROPERTY OF APPLE INC.
THE POSESSOR AGREES TO THE FOLLOWING:
I TO MAINTAIN THIS DOCUMENT IN CONFIDENCE
II NOT TO REPRODUCE OR COPY IT
III NOT TO REVEAL OR PUBLISH IT IN WHOLE OR PART
IV ALL RIGHTS RESERVED

PMU: ET MODULATOR

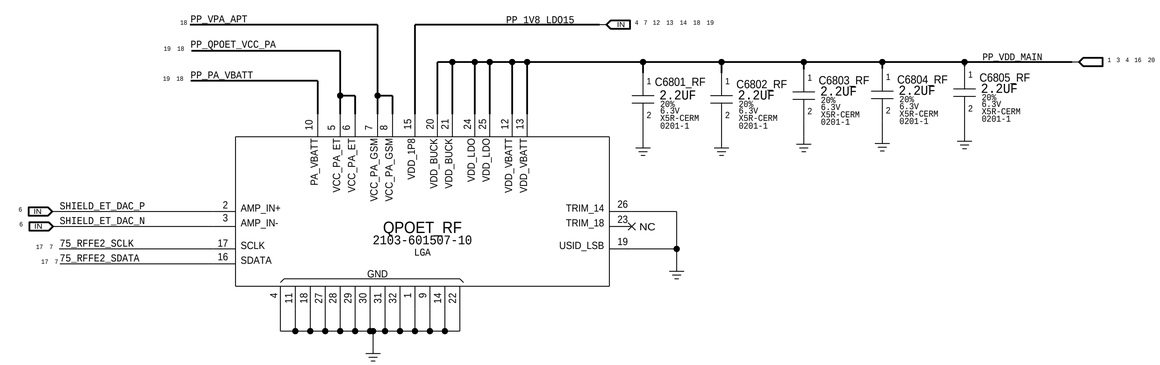

DESENSE CAPS

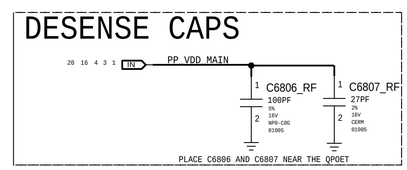

Mr Huy - Vietmobile.vn

CONFIDENTIAL AND PROPRIETARY APPLE SYSTEM DESIGN. FOR REFERENCE PURPOSE ONLY - NOT A CHANGE REQUEST

PAGE TITLE	PMU: ET MODULATOR
Apple Inc.	DRAWING NUMBER 051-00482 SIZE D
	REVISION 8.0.0
	BRANCH
	PAGE 68 OF 72
	SHEET 77 OF 81

NOTICE OF PROPRIETARY PROPERTY:
THE INFORMATION CONTAINED HEREIN IS THE PROPRIETARY PROPERTY OF APPLE INC.
THE POSESSOR AGREES TO THE FOLLOWING:
I TO MAINTAIN THIS DOCUMENT IN CONFIDENCE
II NOT TO REPRODUCE OR COPY IT
III NOT TO REVEAL OR PUBLISH IT IN WHOLE OR PART
IV ALL RIGHTS RESERVED

MLB TEST POINTS

BASEBANDD

PP7000_RF
P2MM-NSM
SM
PP 1 75_RFFE1_SDATA 7 9
OMIT

PP6952_RF
P2MM-NSM
SM
PP 1 75_RFFE1_SCLK 7 9
OMIT

PP6943_RF
P2MM-NSM
SM
PP 1 75_RFFE2_SDATA 7 16
OMIT

PP6944_RF
P2MM-NSM
SM
PP 1 75_RFFE2_SCLK 7 16
OMIT

PP6939_RF
P2MM-NSM
SM
PP 1 75_RFFE3_SDATA 7 13
OMIT

PP6940_RF
P2MM-NSM
SM
PP 1 75_RFFE3_SCLK 7 13
OMIT

PP6941_RF
P2MM-NSM
SM
PP 1 75_RFFE4_SDATA 7 9
OMIT

PP6942_RF
P2MM-NSM
SM
PP 1 75_RFFE4_SCLK 7 9
OMIT

PP6903_RF
P2MM-NSM
SM
PP 1 BB_TO_LAT_ANT_DATA 1 7
OMIT

PP6904_RF
P2MM-NSM
SM
PP 1 BB_TO_LAT_ANT_SCLK 1 7
OMIT

PP6935_RF
P2MM-NSM
SM
PP 1 75_RFFE6_SCLK 7 18 19
OMIT

PP6936_RF
P2MM-NSM
SM
PP 1 75_RFFE6_SDATA 7 18 19
OMIT

PP6906_RF
P2MM-NSM
SM
PP 1 SWD_AP_TO_BB_CLK_BUFFER 6
OMIT

PP6907_RF
P2MM-NSM
SM
PP 1 PMU_TO_BB_USB_VBUS_DETECT 1 3 20
OMIT

PP6908_RF
P2MM-NSM
SM
PP 1 NFC_TO_BB_CLK_REQ 1 3
OMIT

PP6909_RF
P2MM-NSM
SM
PP 1 SIM1_REMOVAL_ALARM 3 7
OMIT

PP6911_RF
P2MM-NSM
SM
PP 1 50_MDM_PCIE_CLK 3 6
OMIT

PP6912_RF
P2MM-NSM
SM
PP 1 XO_OUT_D0_EN 3 6
OMIT

PP6913_RF
P2MM-NSM
SM
PP 1 BB_TO_NFC_CLK 1 3
OMIT

PP6914_RF
P2MM-NSM
SM
PP 1 SHIELD_SLEEP_CLK_32K 3 6
OMIT

PP6933_RF
P2MM-NSM
SM
PP 1 BB_TO_STROBE_DRIVER_GSM_BURST_IND
OMIT

PP6917_RF
P2MM-NSM
SM
PP 1 UART_BB_TO_WLAN_COEX 1 7 20
OMIT

PP6918_RF
P2MM-NSM
SM
PP 1 UART_WLAN_TO_BB_COEX 1 7 20
OMIT

PP6919_RF
P2MM-NSM
SM
PP 1 BB_JTAG_RST_L 6 20
OMIT

PP6920_RF
P2MM-NSM
SM
PP 1 FBRX-DSPDT_CTL1 7 12
OMIT

PP6921_RF
P2MM-NSM
SM
PP 1 FBRX-DSPDT_CTL2 7 12
OMIT

PP6923_RF
P2MM-NSM
SM
PP 1 BB_TO_PMU_PCIE_HOST_WAKE_L 1 7
OMIT

PP6924_RF
P2MM-NSM
SM
PP 1 SPMI_CLK 3 6
OMIT

PP6925_RF
P2MM-NSM
SM
PP 1 SPMI_DATA 3 6
OMIT

PP6926_RF
P2MM-NSM
SM
PP 1 UART_BB_TO_AOP_RXD 1 7
OMIT

PP6929_RF
P2MM-NSM
SM
PP 1 AP_TO_BB_TIME_MARK 1 7
OMIT

PP6930_RF
P2MM-NSM
SM
PP 1 BB_TO_AP_RESET_DETECT_L 1 7
OMIT

PP6931_RF
P2MM-NSM
SM
PP 1 AP_TO_BB_COREDUMP 1 7
OMIT

PP6938_RF
P2MM-NSM
SM
PP 1 RX-DSPDT_CTL2 7 13
OMIT

BBPMU

PP6945_RF
P2MM-NSM
SM
PP 1 PMIC_RESOUT_L 3 6
OMIT

PP6905_RF
P2MM-NSM
SM
PP 1 AP_TO_BBPMU_RADIO_ON_L 1 3 20
OMIT

PP6900_RF
P2MM-NSM
SM
PP 1 PMU_TO_BBPMU_RESET_L 1 3
OMIT

SIM

PP6953_RF
P2MM-NSM
SM
PP 1 SIM1_IO 7 20
OMIT

PP6969_RF
P2MM-NSM
SM
PP 1 SIM1_DETECT 7 20
OMIT

PP6972_RF
P2MM-NSM
SM
PP 1 SIM1_RST 7 20
OMIT

PP6973_RF
P2MM-NSM
SM
PP 1 SIM1_CLK 7 20
OMIT

PP6974_RF
P2MM-NSM
SM
PP 1 90_USB_BB_DATA_P 1 6 20
OMIT

PP6977_RF
P2MM-NSM
SM
PP 1 90_USB_BB_DATA_N 1 6 20
OMIT

BOOT CONFIG

DEFAULT FAST_BOOT[2:0]
USB = 0X2

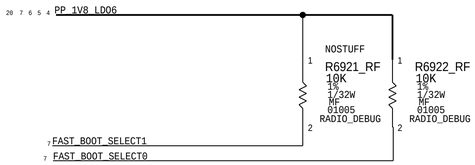

ICEFALL

PP6978_RF
P2MM-NSM
SM
PP 1 AP_TO_ICEFALL_FW_DWLD_REQ 1 20
OMIT

PP6979_RF
P2MM-NSM
SM
PP 1 SIM1_SWP 20
OMIT

PP6980_RF
P2MM-NSM
SM
PP 1 SE2_SWP 20
OMIT

PP6981_RF
P2MM-NSM
SM
PP 1 ICEFALL_LDO_ENABLE 1 20
OMIT

PP7500_RF
P2MM-NSM
SM
PP 1 SE2_READY 1 20
OMIT

PP7501_RF
P2MM-NSM
SM
PP 1 NFC_SWP_MUX 1 20
OMIT

PP7502_RF
P2MM-NSM
SM
PP 1 SE2_PWR_REQ 1 20
OMIT

PCIE

PP6915_RF
P2MM-NSM
SM
PP 1 90_PCIE_AP_TO_BB_REFCLK_P 1 6
OMIT

PP6916_RF
P2MM-NSM
SM
PP 1 90_PCIE_AP_TO_BB_REFCLK_N 1 6
OMIT

PCIE GND

PP6970_RF
P2MM-NSM
SM
PP 1
OMIT

PP6971_RF
P2MM-NSM
SM
PP 1
OMIT

Mr Huy - Vietmobile.vn

PAGE TITLE
TEST POINTS & BOOT CONFIG

Apple Inc.

DRAWING NUMBER 051-00482
SIZE D
REVISION 8.0.0
BRANCH
PAGE 69 OF 72
SHEET 78 OF 81

NOTICE OF PROPRIETARY PROPERTY:
THE INFORMATION CONTAINED HEREIN IS THE PROPRIETARY PROPERTY OF APPLE INC.
THE POSESSOR AGREES TO THE FOLLOWING:
I TO MAINTAIN THIS DOCUMENT IN CONFIDENCE
II NOT TO REPRODUCE OR COPY IT
III NOT TO REVEAL OR PUBLISH IT IN WHOLE OR PART
IV ALL RIGHTS RESERVED

TDD TRANSMIT

2G PA

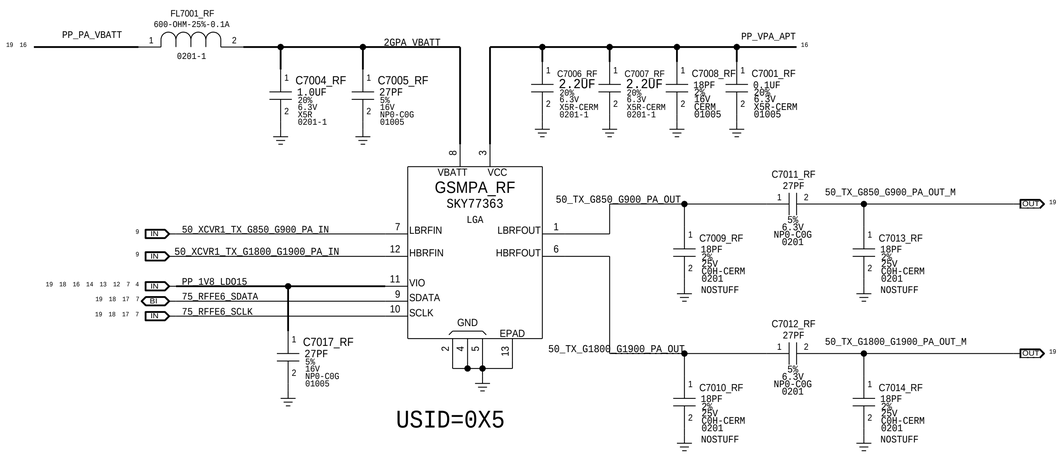

MB HB TDD PA

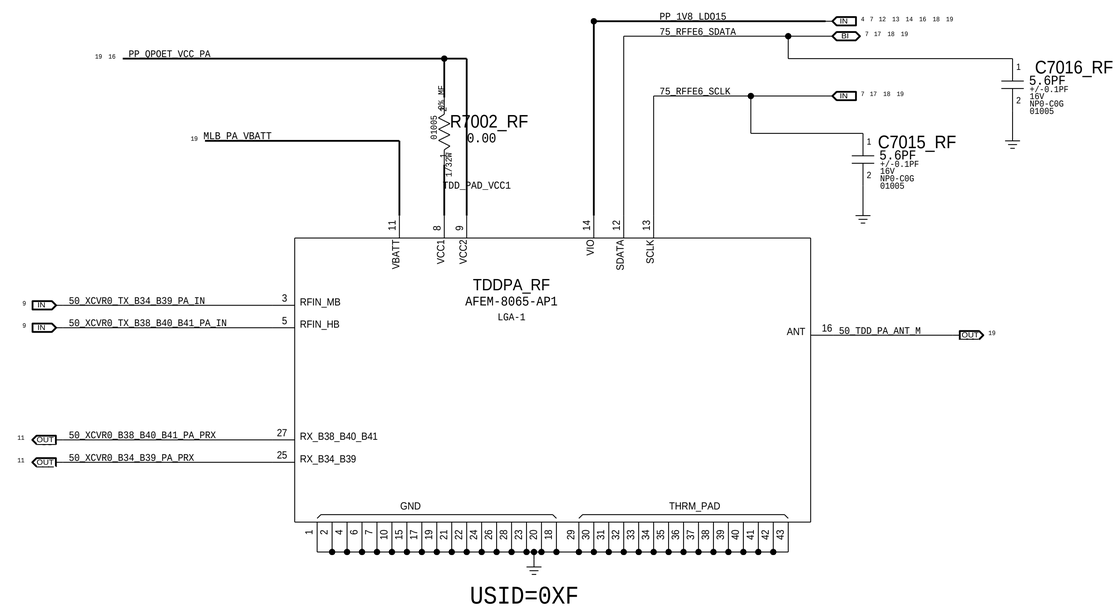

Mr Huy - Vietmobile.vn

SYNC_DATE=04/17/2015

PAGE TITLE: PAGE_TITLE=TDD TRANSMIT

Apple Inc.

DRAWING NUMBER: 051-00482 | SIZE: D

REVISION: 8.0.0

BRANCH:

PAGE: 70 OF 72

SHEET: 79 OF 81

NOTICE OF PROPRIETARY PROPERTY:
THE INFORMATION CONTAINED HEREIN IS THE PROPRIETARY PROPERTY OF APPLE INC.
THE POSESSOR AGREES TO THE FOLLOWING:
I TO MAINTAIN THIS DOCUMENT IN CONFIDENCE
II NOT TO REPRODUCE OR COPY IT
III NOT TO REVEAL OR PUBLISH IT IN WHOLE OR PART
IV ALL RIGHTS RESERVED

FDD TRANSMIT

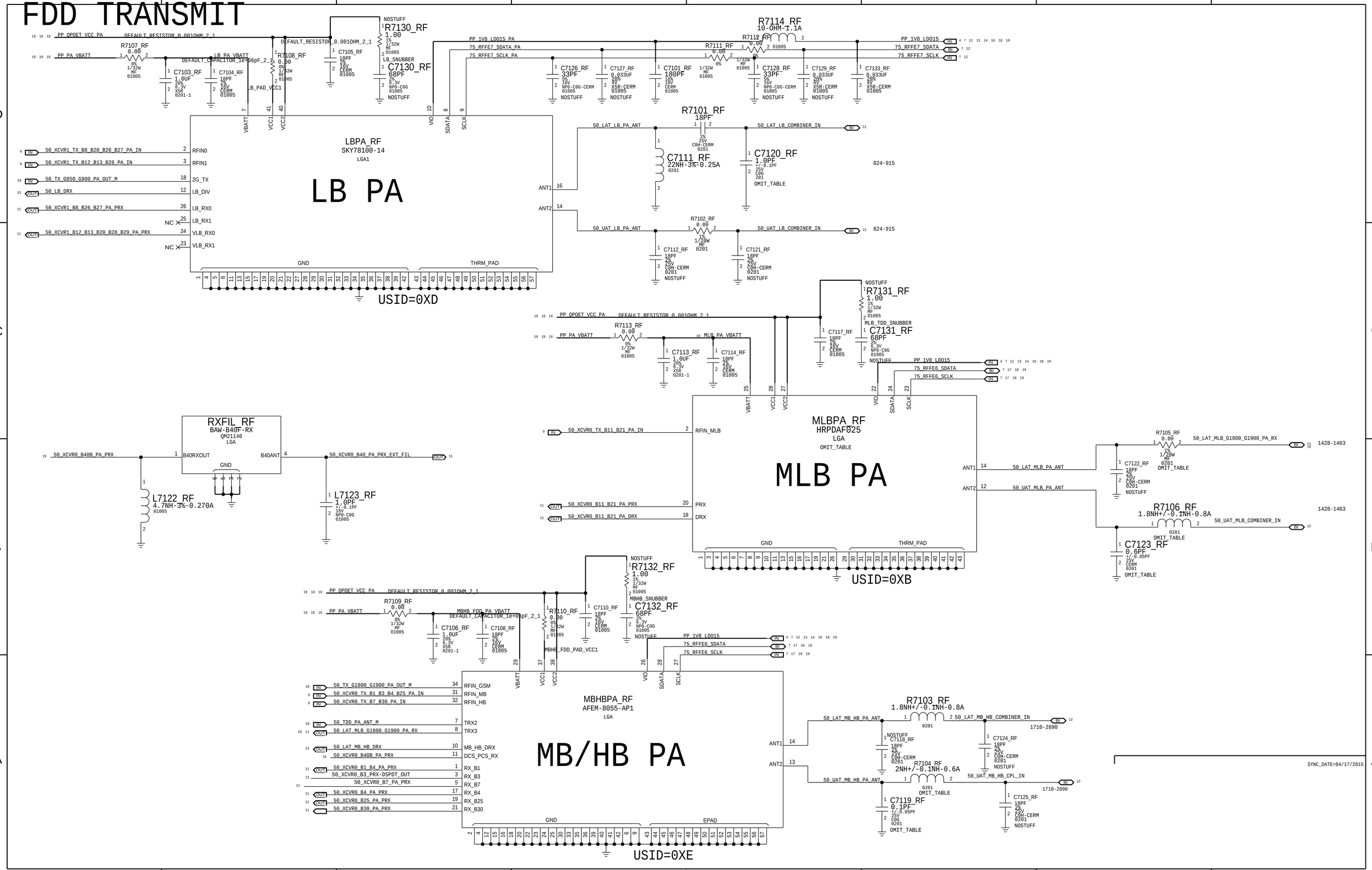

ICEFALL

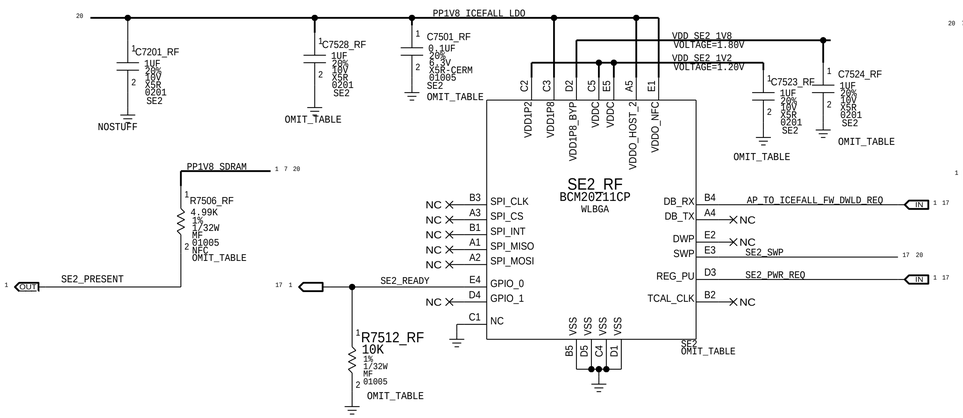

SWP MUX

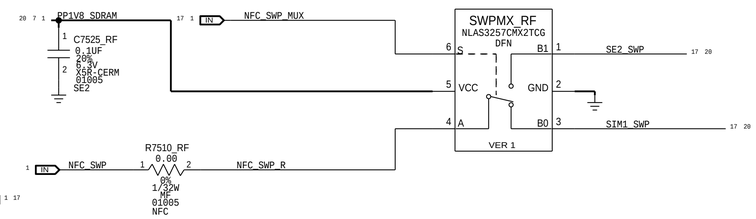

ICEFALL LDO

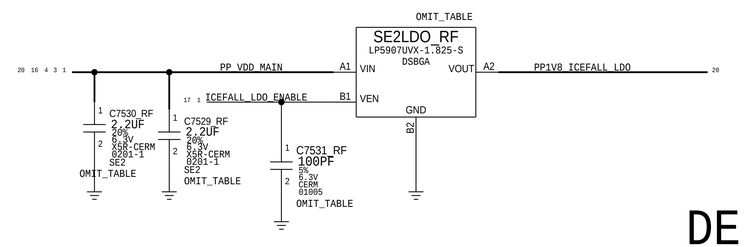

SIM CARD CONNECTOR

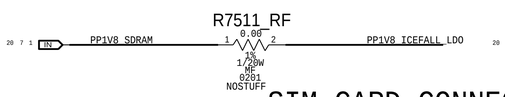

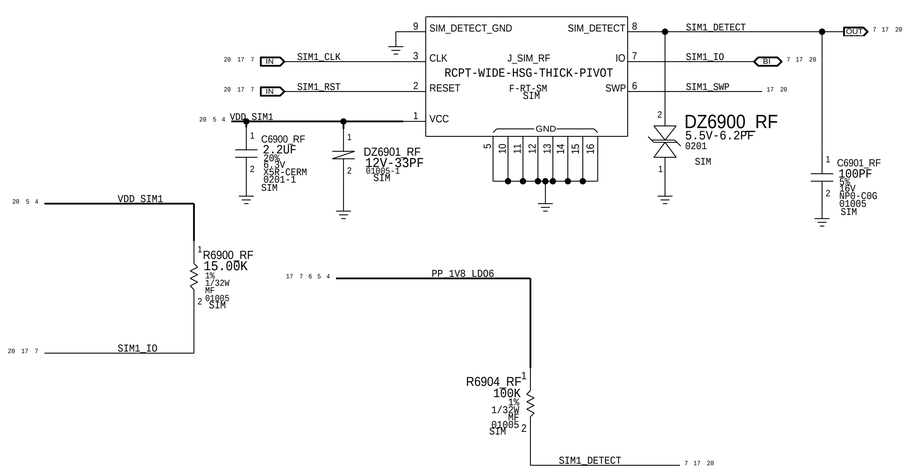

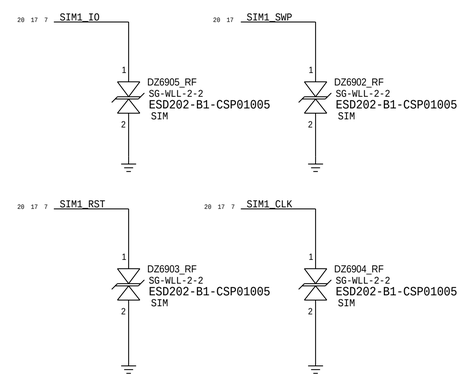

DEBUG CONNECTOR

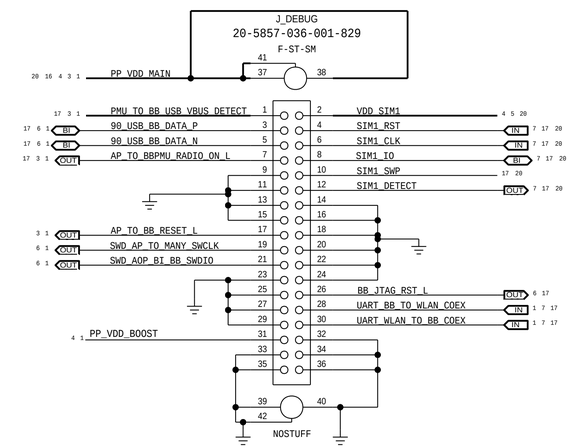

Mr Huy - Vietmobile.vn